Section H, Part 7

Supersedes Section H Part 5, Dated January 1912

Model 2A, Direct-Current Dwarf Signals

PLATE H0701

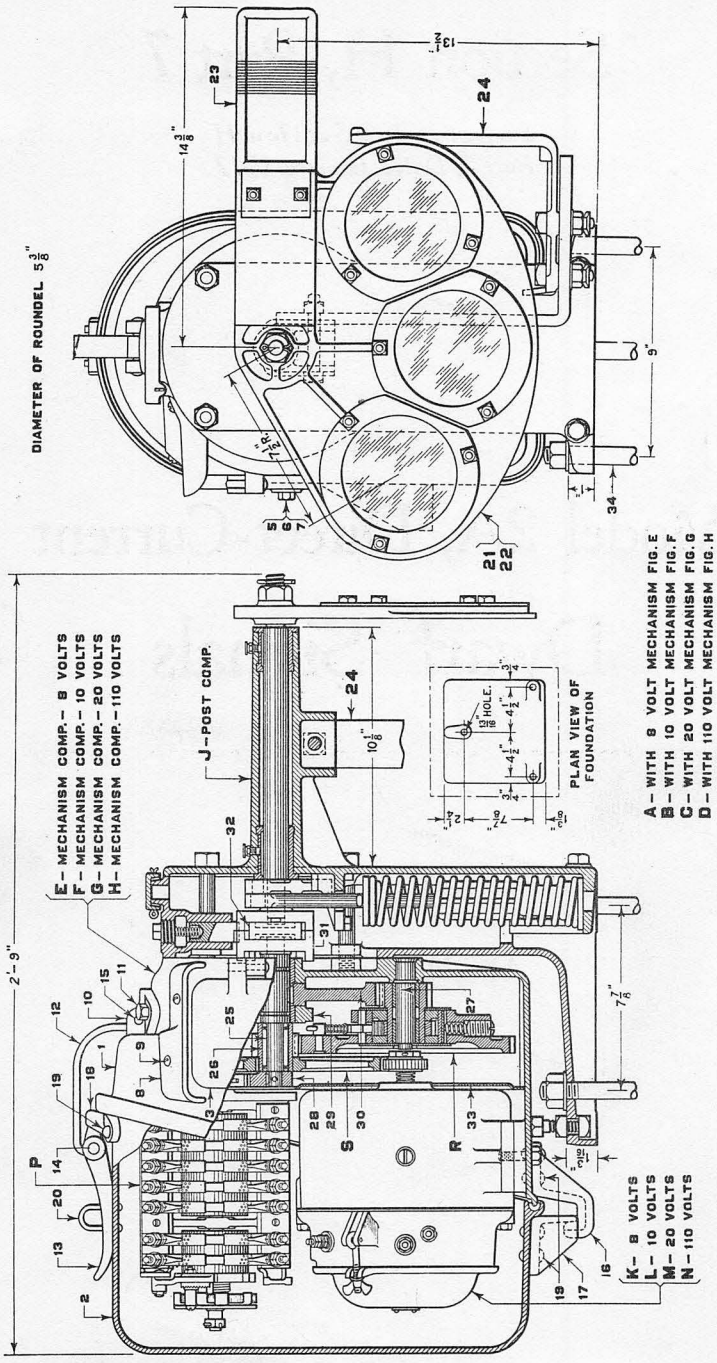

Model 2A, Non-Automatic Dwarf Signals

March 1916 GENERAL RAILWAY SIGNAL COMPANY

Model 2A, Direct-Current

Non-Automatic Dwarf Signals

8 volts, 10 volts, 20 volts and 110 volts

Unless otherwise specified signals will be furnished as illustrated on opposite page. Lamp and foundation are not included. If signal other than that shown is desired, give reference numbers to spectacle and blade; also state number and color of roundels. See Part 18 of this Section for spectacles, blades and roundels.

Circuit controller is equipped with the contacts necessary for the local control of the signals only. Maximum contact equipment is shown merely as a matter of information.

If pole changing contacts or extra drag contacts are required, same must be specified. State the positions of the signal blade at which each extra contact is to make and break, considering the stop position as 0 degree.

With the exception of the cover fastenings, the signal mechanism is the same as that shown on Plate H0901.

For Semaphore Oil and Oiling diagrams see Part 21 of this Section.

Drawing references are shown for convenience in checking shipping lists and invoices.

Fig. No.	Name	Drawing Reference
	Order by plate, figure number and name	
A	Model 2A Non-Automatic Upper Quadrant Dwarf Signal, with 8 volt Mechanism and R. S. A. three light, 90° Spectacle, complete as shown. If lever controlled state whether Dynamic or Battery Indication	29819
A1	as above, except with R. S. A. two light, 45° Spectacle	
A2	same as Fig. A, except without Foundation Bolts and Roundels	
A3	same as Fig. A1, except without Foundation Bolts and Roundels	
B	same as Fig. A, except 10 volt	
B1	as above, except with R. S. A. two light, 45° Spectacle	
B2	same as Fig. B, except without Foundation Bolts and Roundels	
B3	same as Fig. B1, except without Foundation Bolts and Roundels	
C	same as Fig. A, except 20 volt	
C1	as above, except with R. S. A. two light, 45° Spectacle	

GENERAL RAILWAY SIGNAL COMPANY March 1916

Model 2A, Direct-Current

Non-Automatic Dwarf Signals

8 volts, 10 volts, 20 volts and 110 volts

Drawing references are shown for convenience in checking shipping lists and invoices.

Fig. No.	Name	Drawing Reference
	Order by plate, figure number and name	
C2	same as Fig. C, except without Foundation Bolts and Roundels	
C3	same as Fig. C1, except without Foundation Bolts and Roundels	
D	Model 2A Non-Automatic Upper Quadrant Dwarf Signal, with 110 volt Mechanism and R. S. A. three light, 90° Spectacle, complete as shown	
D1	as above, except with R. S. A. two light, 45° Spectacle	
D2	same as Fig. D, except without Foundation Bolts and Roundels	
D3	same as Fig. D1, except without Foundation Bolts and Roundels	
E	Model 2A Non-Automatic 8 volt Signal Mechanism Complete, includes Case, Cover, Gears, Motor and Circuit Controller. Does not include Post Complete, Spectacle or Lamp Bracket. Specify Spectacle to be used and whether Signal is to operate in two or three positions. If lever controlled specify whether Dynamic or Battery Indication	29817
F	same as Fig. E, except 10 volt	
G	same as Fig. E, except 20 volt	
H	Model 2A Non-Automatic 110 volt Signal Mechanism Complete, includes Case, Cover, Gears, Motor and Circuit Controller. Does not include Post Complete, Spectacle or Lamp Bracket. Specify Spectacle to be used and whether Signal is to operate in two or three positions	
J	Post Complete. Specify whether for 8, 10, 20 or 110 volt Signal. For details see Plate H0707 Fig. A	
K	Motor Complete (8 volts). For details see Plate H1301 Fig. A.	39500
L	Motor Complete (10 volts). For details see Plate H1301 Fig. B.	29890
M	Motor Complete (20 volts). For details see Plate H1301 Fig. C.	30870
N	Motor Complete (110) volts. For details see Plate H1304 Fig. B	34605

March 1916 GENERAL RAILWAY SIGNAL COMPANY

Model 2A, Direct-Current

Non-Automatic Dwarf Signals

8 volts, 10 volts, 20 volts and 110 volts

Drawing references are shown for convenience in checking shipping lists and invoices.

Fig. No.	Name	Drawing Reference
	Order by plate, figure number and name	
P	Circuit Controller Complete. For details and specifications see Plate H1401	34610
R	Ratchet Gear Complete. For details see Plate H1001 Fig. A	30080
S	Intermediate Gear Complete. For details see Plate H1001 Fig. C	29965
1	Case Complete, includes Cover, Side Door, Shield for Side Door, Hinge Pins, Studs for Intermediate Gear, Bushing, Hasp, Strap, Lugs and all necessary Bolts, Pins and Rivets for fastening the same	32016
2	Cover Complete, includes Gasket, Staple, Lugs and Rivets for fastening Lugs	32001
3	Side Door, with Gasket	
3a	as above, except with Cap Screw, Collar and Pin. (1-3, 1-5, 1-6, 1-7)	
5	Cap Screw, $\frac{5}{16}''$ x $1\frac{1}{4}''$ hex. hd., for fastening Side Door Fig. 3	0712
5a	as above, except with Collar and Pin. (1-5, 1-6, 1-7)	
6	Collar, for Cap Screw Fig 5	30156
7	Pin, for Collar Fig. 6	20592
8	Shield, for Side Door Fig. 3	30520
9	Screw, $\frac{1}{4}''$ x $\frac{1}{2}''$ rd. hd., for fastening Shield Fig. 8 to Case	2449
10	Lug, for Strap Fig. 12	32006
11	Cap Screw, $\frac{3}{8}''$ x $\frac{3}{4}''$ hex. hd., for fastening Lug Fig. 10 to Case	0395
12	Strap, for Hasp Tongue Fig. 13	32008
13	Hasp Tongue	32007
14	Pin, $\frac{3}{8}''$ x $1\frac{11}{16}''$, for fastening Hasp Tongue Fig. 13 to Strap Fig. 12	7005
15	Pin, $\frac{3}{8}''$ x $2\frac{3}{8}''$, for fastening Strap Fig. 12 to Lug Fig. 10	7567
16	Lug, for holding Cover to Case	32005
17	Lug, lower, for Cover Fig. 2	32003
18	Lug, upper, for Cover Fig. 2	32004
19	Rivet, $\frac{5}{16}''$ x $\frac{7}{8}''$ rd. hd., for fastening Lugs Figs. 16, 17 and 18	0876
20	Staple, for Hasp Tongue Fig. 13	16914

GENERAL RAILWAY SIGNAL COMPANY March 1916

Model 2A, Direct-Current

Non-Automatic Dwarf Signals

8 volts, 10 volts, 20 volts and 110 volts

Drawing references are shown for convenience in checking shipping lists and invoices.

Fig. No.	Name	Drawing Reference
	Order by plate, figure number and name	
21	Spectacle Complete, includes Bezel Rings and Bolts, three light, 90° throw, $7\frac{1}{2}''$ centers, takes $5\frac{3}{8}''$ Roundels. (Roundels are not included). R. S. A. Std. For details see Plate H1812 Fig. K	40423
22	Spectacle Complete, includes Bezel Rings and Bolts, two light, 45° throw, $7\frac{1}{2}''$ centers, takes $5\frac{3}{8}''$ Roundels. (Roundels are not included). R. S. A. Std. For details see Plate H1812 Fig. A	40020
23	Rubber Blade, with Blade Plate and two $\frac{1}{4}''$ x $1''$ sq. hd. Bolts with sq. Nuts	9199
23a	Rubber Blade only	9197
24	Lamp Bracket Complete, includes Support, Bolts, Nuts and Washers. R. S. A. Type. For details see Plate H1713	42035
25	Main Shaft, with one $\frac{3}{16}''$ x $2''$ Cotter Pin, and two Woodruff Keys. For details see Plate H1003 Fig. 7a	
26	Roller Bearing Complete, for Intermediate Gear Fig. S. For detail see Plate H1001 Fig. 12	29998
27	Stud, for supporting Ratchet Gear Fig. R. For detail see Plate H1003 Fig. 10	29837
28	Sector, for operating Circuit Controller. For detail see Plate H1003 Fig. 6	29842
29	Bearing Bracket Complete, includes Bushing and Oiler, for Main Shaft Fig. 25. For details see Plate H1003 Fig. 2	29833
29a	Dowel Screw, for fastening Bearing Bracket Fig. 29 to Case	29849
30	Main Sector. For detail see Plate H1003 Fig. 1	29830
31	Machine Driver. For detail see Plate H1003 Fig. 4	29912
32	Intermediate Driver. For detail see Plate H1003 Fig. 5	29911
33	Partition, sheet iron. For detail see Plate H1001 Fig. 18	30041
34	Foundation Bolt, $\frac{3}{4}''$ x $14''$, with Washer and hex. Nut	
34a	Foundation Bolt, $\frac{3}{4}''$ x $14''$, with hex. Nut only	
34b	Washer, for Fig. 34	073

Memoranda

PLATE H0703

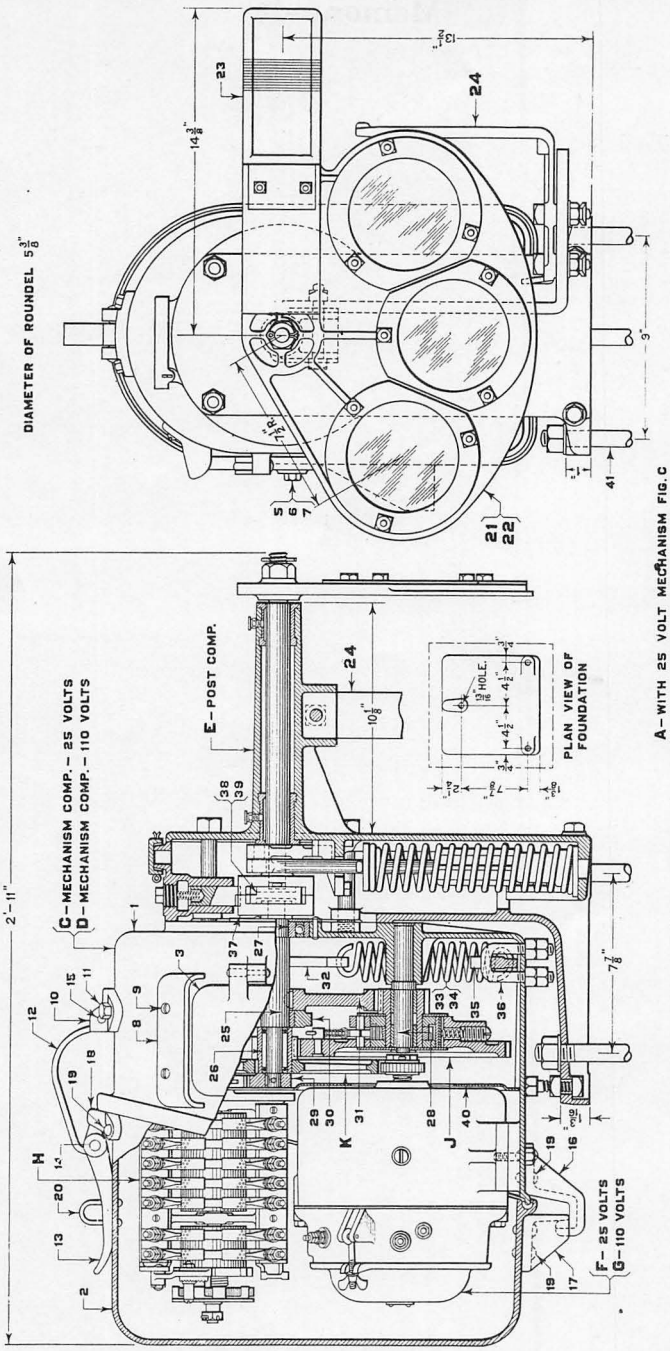

Model 2A, Semi-Automatic Dwarf Signal

March 1916 GENERAL RAILWAY SIGNAL COMPANY

Model 2A, Direct-Current

Semi-Automatic Dwarf Signals

25 volts, 110 volts

Unless otherwise specified signals will be furnished as illustrated on opposite page. Lamp and foundation are not included. If signal other than that shown is desired, give reference numbers to spectacle and blade; also state number and color of roundels. See Part 18 of this Section for spectacles, blades and roundels.

Circuit controller is equipped with the contacts necessary for the local control of the signals only. Maximum contact equipment is shown merely as a matter of information.

If pole changing contacts or extra drag contacts are required, same must be specified. State the positions of the signal blade at which each extra contact is to make and break, considering the stop position as 0 degree.

With the exception of the cover fastenings, the signal mechanism is the same as that shown on Plate H0903.

For Semaphore Oil and Oiling diagrams see Part 21 of this Section.

Drawing references are shown for convenience in checking shipping lists and invoices.

Fig. No.	Name	Drawing Reference
	Order by plate, figure number and name	
A	Model 2A Semi-Automatic Upper Quadrant Dwarf Signal, with 25 volt Mechanism and R. S. A. three light, 90° Spectacle, complete as shown	41800
A1	as above, except with R. S. A. two light, 45° Spectacle	
A2	same as Fig. A, except without Foundation Bolts and Roundels	
A3	same as Fig. A1, except without Foundation Bolts and Roundels	
B	same as Fig. A, except 110 volt	
B1	as above, except with R. S. A. two light, 45° Spectacle	
B2	same as Fig. B, except without Foundation Bolts and Roundels	
B3	same as Fig. B1, except without Foundation Bolts and Roundels	

GENERAL RAILWAY SIGNAL COMPANY March 1916

Model 2A, Direct-Current

Semi-Automatic Dwarf Signals

25 volts, 110 volts

Drawing references are shown for convenience in checking shipping lists and invoices.

Fig. No.	Name	Drawing Reference
	Order by plate, figure number and name	
C	Model 2A Semi-Automatic 25 volt Signal Mechanism Complete, includes Case, Cover, Gears, Motor and Circuit Controller. Does not include Post Complete, Spectacle or Lamp Bracket. Specify Spectacle to be used and whether Signal is to operate in two or three positions	
D	same as Fig. C, except 110 volt	
E	Post Complete. For details see Plate H0707 Fig. A	
F	Motor Complete (25 volts). For details see Plate H1304 Fig. A.	35830
G	Motor Complete (110 volts). For details see Plate H1304 Fig. B	34605
H	Circuit Controller Complete. For details and specifications see Plate H1401	34610
J	Ratchet Gear Complete. For details see Plate H1001 Fig. A.	30080
K	Intermediate Gear Complete. For details see Plate H1001 Fig. C	29965
1	Case Complete, includes Cover, Side Door, Shield for Side Door, Hinge Pins, Stud for Intermediate Gear, Plate for Retaining Ball Bearing, Stop for Sector, Stud for Spring, Hasp, Strap, Lugs and all necessary Bolts, Pins and Rivets for fastening the same. For upper quadrant Signals	42334
1a	as above, except for lower quadrant Signals	42335
2	Cover Complete, includes Gasket, Staple, Lugs and Rivets for fastening Lugs	32001
3	Side Door, with Gasket	
3a	as above, except with Cap Screw, Collar and Pin. (1-3, 1-5, 1-6, 1-7)	
5	Cap Screw, $\frac{5}{16}''$ x $1\frac{1}{4}''$ hex. hd., for fastening Side Door Fig. 3.	0712
5a	as above, except with Collar and Pin. (1-5, 1-6, 1-7)	
6	Collar, for Cap Screw Fig. 5	30156
7	Pin, for Collar Fig. 6	20592
8	Shield, for Side Door Fig. 3	34639

March 1916 GENERAL RAILWAY SIGNAL COMPANY

Model 2A, Direct-Current

Semi-Automatic Dwarf Signals

25 volts, 110 volts

Drawing references are shown for convenience in checking shipping lists and invoices.

Fig. No.	Name	Drawing Reference
	Order by plate, figure number and name	
9	Screw, $\frac{1}{4}''$ x $\frac{1}{2}''$ rd. hd., for fastening Shield Fig. 8 to Case	2449
10	Lug, for Strap Fig. 12	32006
11	Cap Screw, $\frac{3}{8}''$ x $\frac{3}{4}''$ hex. hd., for fastening Lug Fig. 10 to Case	0395
12	Strap, for Hasp Tongue Fig. 13	32008
13	Hasp Tongue	32007
14	Pin, $\frac{3}{8}''$ x $1\frac{1}{16}''$, for fastening Hasp Tongue Fig. 13 to Strap Fig. 12	7005
15	Pin, $\frac{3}{8}''$ x $2\frac{3}{8}''$, for fastening Strap Fig. 12 to Lug Fig. 10	7567
16	Lug, for holding Cover to Case	32005
17	Lug, lower, for Cover Fig. 2	32003
18	Lug, upper, for Cover Fig. 2	32004
19	Rivet, $\frac{5}{16}''$ x $\frac{7}{8}''$ rd. hd., for fastening Lugs Figs. 16, 17 and 18	0876
20	Staple, for Hasp Tongue Fig. 13	16914
21	Spectacle Complete, includes Bezel Rings and Bolts, three light, 90° throw, $7\frac{1}{2}''$ centers, takes $5\frac{3}{8}''$ Roundels. (Roundels are not included). R. S. A. Std. For details see Plate H1812 Fig. K	40423
22	Spectacle Complete, includes Bezel Rings and Bolts, two light, 45° throw, $7\frac{1}{2}''$ centers, takes $5\frac{3}{8}''$ Roundels (Roundels are not included.) R. S. A. Std. For details see Plate H1812 Fig. A	40020
23	Rubber Blade, with Blade Plate and two $\frac{1}{4}''$ x $1''$ sq. hd. Bolts with sq. Nuts	9199
23a	Rubber Blade only	9197
24	Lamp Bracket Complete, includes Support, Bolts, Nuts and Washers. R. S. A. Type. For details see Plate H1713 Fig. A	42035
25	Main Shaft, with one $\frac{3}{16}''$ x $1\frac{3}{4}''$ Cotter Pin, and two Woodruff Keys. For details see Plate H1005 Fig. 7a	
26	Roller Bearing Complete, for Intermediate Gear Fig. K. For detail see Plate H1001 Fig. 12	29998
27	Ball Bearing Complete, for Main Shaft Fig. 25. For details see Plate H1005 Fig. 10	47795

GENERAL RAILWAY SIGNAL COMPANY March 1916

Model 2A, Direct-Current

Semi-Automatic Dwarf Signals

25 volts, 110 volts

Drawing references are shown for convenience in checking shipping lists and invoices.

Fig. No.	Name	Drawing Reference
	Order by plate, figure number and name	
28	Stud for supporting Ratchet Gear Fig. J. For detail see Plate H1005 Fig. 6	34628
29	Sector, for operating Circuit Controller. For detail see Plate H1005 Fig. 4	34646
30	Bearing Bracket Complete, includes Bushing and Oiler, for Main Shaft Fig. 25. For details see Plate H1005 Fig. 3	34637
30a	Stud, with hex. Nut and Washer, for fastening Bearing Bracket Fig. 30 and Circuit Controller Fig. H to Case. For details see Plate H1005 Fig. 5	
31	Main Sector Complete, includes Hanger Block, Screw, Washer and Cotter Pin. For detail see Plate H1005 Fig. 1	
32	Hook Arm, for Spring Fig. 33. For detail see Plate H1005 Fig. 14	34623
33	Spring, short. For detail see Plate H1005 Fig. 17	34632
34	Spring, long. For detail see Plate H1005 Fig. 18	34633
35	Lever, for Springs Fig. 33 and Fig. 34. For detail see Plate H1005 Fig. 19	34630
36	U Bolt, with four $\frac{1}{2}''$ hex. Nuts for Lever Fig. 35. For details see Plate H1005 Fig. 20	
37	Machine Driver. For detail see Plate H1005 Fig. 25	34627
38	Intermediate Driver, for upper quadrant right hand and lower quadrant left hand Signals. For detail see Plate H1005 Fig. 23	34634
39	Intermediate Driver, for lower quadrant right hand and upper quadrant left hand Signals. For details see Plate H1005 Fig. 24	35923
40	Partition, sheet iron. For detail see Plate H1001 Fig. 18	30041
41	Foundation Bolt, $\frac{3}{4}''$ x 14″, with Washer and hex. Nut	
41a	Foundation Bolt, $\frac{3}{4}''$ x 14″, with hex. Nut only	
41b	Washer, for Fig. 41	073

Memoranda

PLATE H0705

GENERAL RAILWAY SIGNAL COMPANY March 1916

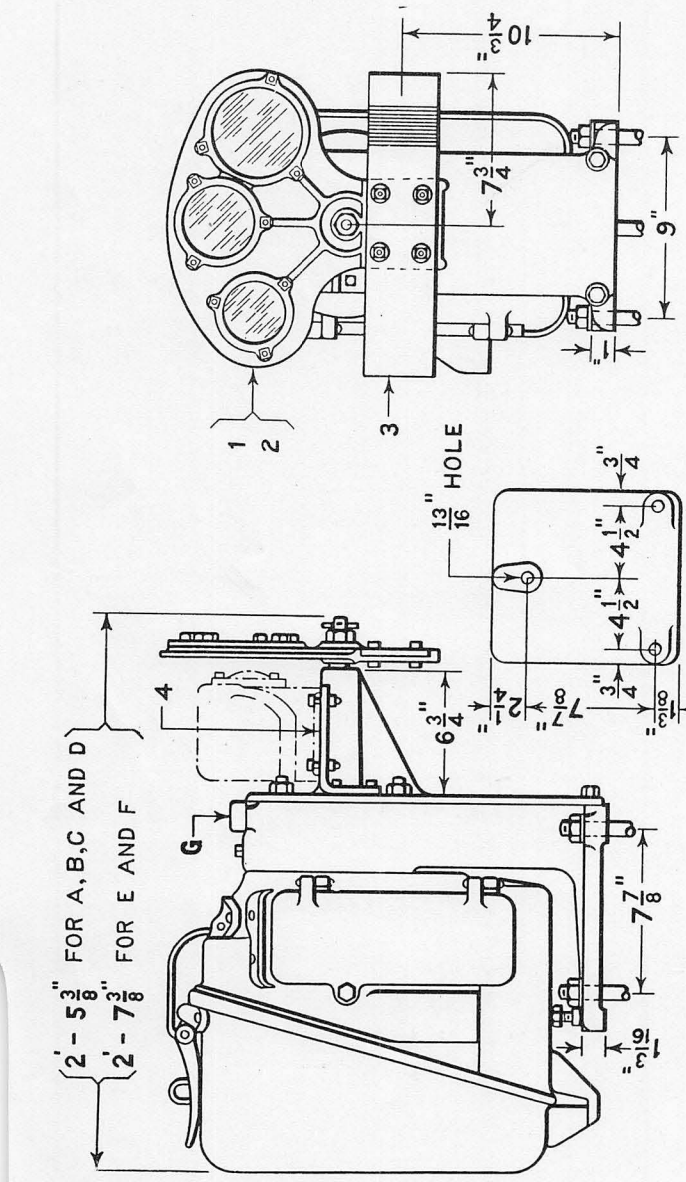

A – WITH 8 VOLT NON–AUTOMATIC MECHANISM
B – WITH 10 VOLT NON–AUTOMATIC MECHANISM
C – WITH 20 VOLT NON–AUTOMATIC MECHANISM
D – WITH 110 VOLT NON–AUTOMATIC MECHANISM
E – WITH 25 VOLT SEMI–AUTOMATIC MECHANISM
F – WITH 110 VOLT SEMI–AUTOMATIC MECHANISM

Model 2A, Dwarf Signals

March 1916 GENERAL RAILWAY SIGNAL COMPANY

Model 2A Dwarf Signals

Non-Automatic and Semi-Automatic

Direct-Current, Short-Horn Bearing

Dwarf Signal as illustrated on opposite page is furnished with a short horn bearing and bracket for electric lamp. The signal occupies little space and is desirable at terminals, etc., where track centers are close. The Signal Mechanism for the non-automatic signal is the same as that shown on Plate H0701. The semi-automatic is the same as that shown on plate H0703.

Unless otherwise specified, signals will be furnished as shown. State number and color of roundels. Lamp and foundation are not included.

Circuit controller is equipped with the contacts necessary for the local control of the signals only. If pole changing contacts or extra drag contacts are required, same must be specified. State the positions of the signal blade at which each extra contact is to make and break, considering the stop position as 0 degree.

For Semaphore Oil and Oiling diagrams see Part 21 of this Section.

Drawing references are shown for convenience in checking shipping lists and invoices.

Fig. No.	Name	Drawing Reference
	Order by plate, figure number and name	
A	Model 2A Non-Automatic Upper Quadrant Dwarf Signal, with 8 volt Mechanism Plate H0701 Fig. E and Spectacle Fig. 1 ($6\frac{1}{2}''$ centers), complete as shown. If lever controlled state whether Dynamic or Battery Indication	
A1	as above, except with Spectacle Fig. 2. ($7\frac{1}{2}''$ centers)	
A2	same as Fig. A, except without Foundation Bolts and Roundels	
A3	same as Fig. A1, except without Foundation Bolts and Roundels	
B	same as Fig. A, except with 10 volt Mechanism Plate H0701 Fig. F	
B1	as above, except with Spectacle Fig. 2. ($7\frac{1}{2}''$ centers)	
B2	same as Fig. B, except without Foundation Bolts and Roundels	
B3	same as Fig. B1, except without Foundation Bolts and Roundels	

GENERAL RAILWAY SIGNAL COMPANY March 1916

Model 2A Dwarf Signals

Non-Automatic and Semi-Automatic

Direct-Current, Short-Horn Bearing

Drawing references are shown for convenience in checking shipping lists and invoices.

Fig. No.	Name	Drawing Reference
	Order by plate, figure number and name	
C	same as Fig. A, except with 20 volt Mechanism Plate H0701 Fig. G	
C1	as above, except with Spectacle Fig. 2 ($7\frac{1}{2}''$ centers)	
C2	same as Fig. C, except without Foundation Bolts and Roundels	
C3	same as Fig. C1, except without Foundation Bolts and Roundels	
D	Model 2A Non-Automatic Upper Quadrant Dwarf Signal, with 110 volt Mechanism Plate H0701 Fig. H and Spectacle Fig. 1. ($6\frac{1}{2}''$ centers), complete as shown	
D1	as above, except with Spectacle Fig. 2. ($7\frac{1}{2}''$ centers)	
D2	same as Fig. D, except without Foundation Bolts and Roundels	
D3	same as Fig. D1, except without Foundation Bolts and Roundels	
E	Model 2A Semi-Automatic Upper Quadrant Dwarf Signal, with 25 volt Mechanism Plate H0703 Fig. C and Spectacle Fig. 1, ($6\frac{1}{2}''$ centers), complete as shown	
E1	as above, except with Spectacle Fig. 2. ($7\frac{1}{2}''$ centers)	
E2	same as Fig. E, except without Foundation Bolts and Roundels	
E3	same as Fig. E1, except without Foundation Bolts and Roundels	
F	same as Fig. E, except with 110 volt Mechanism Plate H0703 Fig. D	
F1	as above, except with Spectacle Fig. 2. ($7\frac{1}{2}''$ centers)	
F2	same as Fig. F, except without Foundation Bolts and Roundels	
F3	same as Fig. F1, except without Foundation Bolts and Roundels	

March 1916 GENERAL RAILWAY SIGNAL COMPANY

Model 2A Dwarf Signals

Non-Automatic and Semi-Automatic

Direct-Current, Short-Horn Bearing

Drawing references are shown for convenience in checking shipping lists and invoices.

Fig. No.	Name	Drawing Reference
	Order by plate, figure number and name	
G	Post Complete. Specify whether for 8, 10, 20, 25 or 110 volt Signal. For details see Plate H0707 Fig. B.	
1	Spectacle Complete, includes Bezel Rings and Bolts, three light, 90° throw, $6\frac{1}{2}''$ centers, takes $3\frac{1}{2}''$, $4''$ and $5''$ Roundels. (Roundels are not included). For details see Plate H1812 Fig. P.	29941
2	Spectacle Complete, includes Bezel Rings and Bolts, three light, 90° throw, $7\frac{1}{2}''$ centers, takes $5\frac{1}{2}''$ Roundels. (Roundels are not included). For details see Plate H1812 Fig. N.	32630
3	Wood Blade, one priming coat only, with four Washers and four $\frac{1}{4}''$ x $\frac{7}{8}''$ sq. hd. Bolts with sq. Nuts.	
3a	Wood Blade only, for Fig. 3.	
4	Lamp Bracket.	30849

PLATE H0707

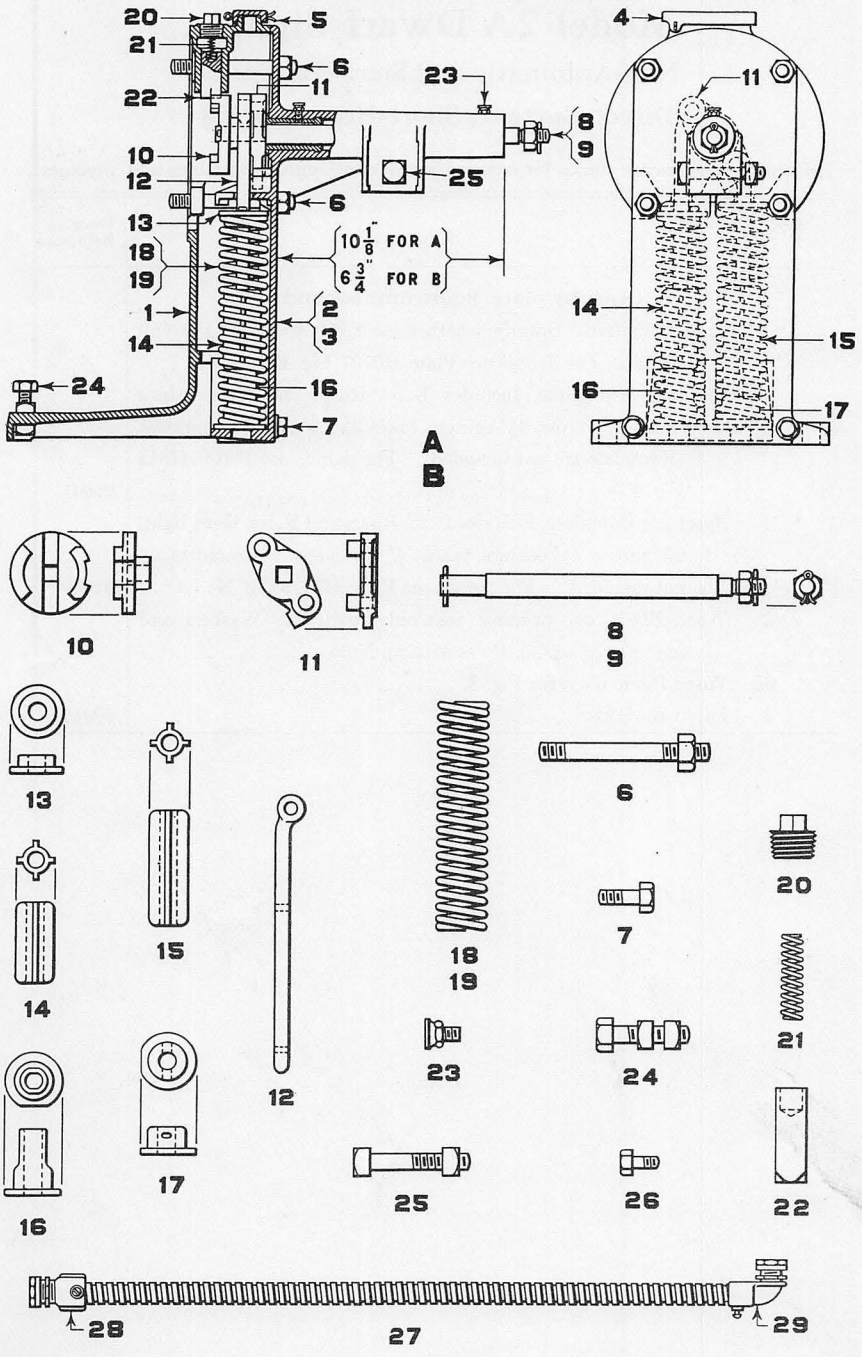

Model 2A Dwarf Signal—Post Details

March 1916 GENERAL RAILWAY SIGNAL COMPANY

Model 2A Dwarf Signals

Posts and Post Details

Drawing references are shown for convenience in checking shipping lists and invoices.

Fig. No.	Name	Drawing Reference
	Order by plate, figure number and name	
A	Post Complete as shown, with long Horn Bearing. Specify Spectacle to be used so that proper Shaft may be furnished. See Part 18 of this Section for Spectacles. (1-1, 1-2, 1-4a, 4-6, 2-7, 1-8, 1-10, 1-11, 2-12, 1-13, 1-14, 1-15, 1-16, 1-17, 2-18 or 19 as specified, 1-20, 1-21, 1-22, 2-23, 1-24, 1-25) ...	
B	Post Complete, with short Horn Bearing. Specify spectacle to be used so that proper Shaft may be furnished. See Part 18 of this Section for Spectacles. (1-1, 1-3, 1-4a, 4-6, 2-7, 1-9, 1-10, 1-11, 2-12, 1-13, 1-14, 1-15, 1-16, 1-17, 2-18 or 19 as specified, 1-20, 1-21, 1-22, 2-23, 1-24, 2-26).....	
1	Post only.....	29919
2	Bearing, for Fig. A.....	29918
3	Bearing, for Fig. B.....	30842
4	Cap only.....	33581
5	Cotter Pin, $\frac{3}{16}''$ x 2″ long, for Cover Fig. 4.....	046
6	Stud, $\frac{5}{8}''$ x $5\frac{5}{16}''$, with hex. Nut, for fastening Signal Mechanism Case to Post.....	
6a	as above, Stud only.....	29922
7	Tap Bolt, $\frac{3}{8}''$ x 1″ hex. hd., for fastening Bearings Fig. 2 and Fig. 3 to Post Fig. 1.....	0597
8	Shaft, with $\frac{5}{8}''$ hex. Nut and Cotter Pins, for Fig. A. Specify Spectacle to be used. See Part 18 of this Section for Spectacles.....	
8a	as above, Shaft only.....	
9	Shaft, with $\frac{5}{8}''$ hex. Nut and Cotter Pins, for Fig. B. Specify Spectacle to be used. See Part 18 of this Section for Spectacles.....	
9a	as above, Shaft only.....	
10	Shaft Driver.....	29920
11	Spring Arm, with two Studs as shown.....	
12	Rod, for Springs Fig. 18 and Fig. 19.....	29928
13	Upper Guide, for Spring.....	29925

GENERAL RAILWAY SIGNAL COMPANY March 1916

Model 2A Dwarf Signals

Posts and Post Details

Drawing references are shown for convenience in checking shipping lists and invoices.

Fig. No.	Name	Drawing Reference
	Order by plate, figure number and name	
14	Inside Guide, short	30285
15	Inside Guide, long	30284
16	Lower Guide, used with short Inside Guide Fig. 14	29927
17	Lower Guide, used with long Inside Guide Fig. 15	29924
18	Spring, for 8, 10 and 20 volt Signal Mechanism	30286
19	Spring, for 25 and 110 volt Signal Mechanism	29926
20	Pipe Plug, 1″	0888
21	Spring, for Lock Dog Fig. 22	6944
22	Lock Dog	29913
23	Oiler	32418
24	Bolt, $\frac{1}{2}$″ x 2″ hex. hd., with two sq. Nuts	
24a	Nut, $\frac{1}{2}$″ sq., for Bolt Fig. 24	0553
25	Bolt, $\frac{1}{2}$″ x 3″ sq. hd. with sq. Nut, for fastening Lamp Bracket to Bearing Fig. 2	0242
26	Tap Bolt, $\frac{3}{8}$″ x $\frac{3}{4}$″ hex. hd., for fastening Lamp Bracket to Bearing Fig. 3	0398
27	Conduit Complete as shown, for carrying wires from Signal Mechanism to Electric Light. (1-27a, 1-28, 1-29)	47414
27a	Conduit only, $\frac{3}{4}$″ inside diameter, 2′-7″ long, for Fig. 27	43368
28	Connector, with Bushing, Lock Nut and one No. 14 x $\frac{3}{8}$″ rd. hd. Screw, for Electric Light end, for Fig. 27	
29	Angle Connector, with Bushing, Lock Nut and one No. 14 x $\frac{3}{8}$″ rd. hd. Screw, for Signal Mechanism end, for Fig. 27	

Section H, Part 8

Models 2 and 3 Solenoid Dwarf Signal

Copyright, 1927, General Railway Signal Company

PLATE H0801

GENERAL RAILWAY SIGNAL COMPANY

April 1927

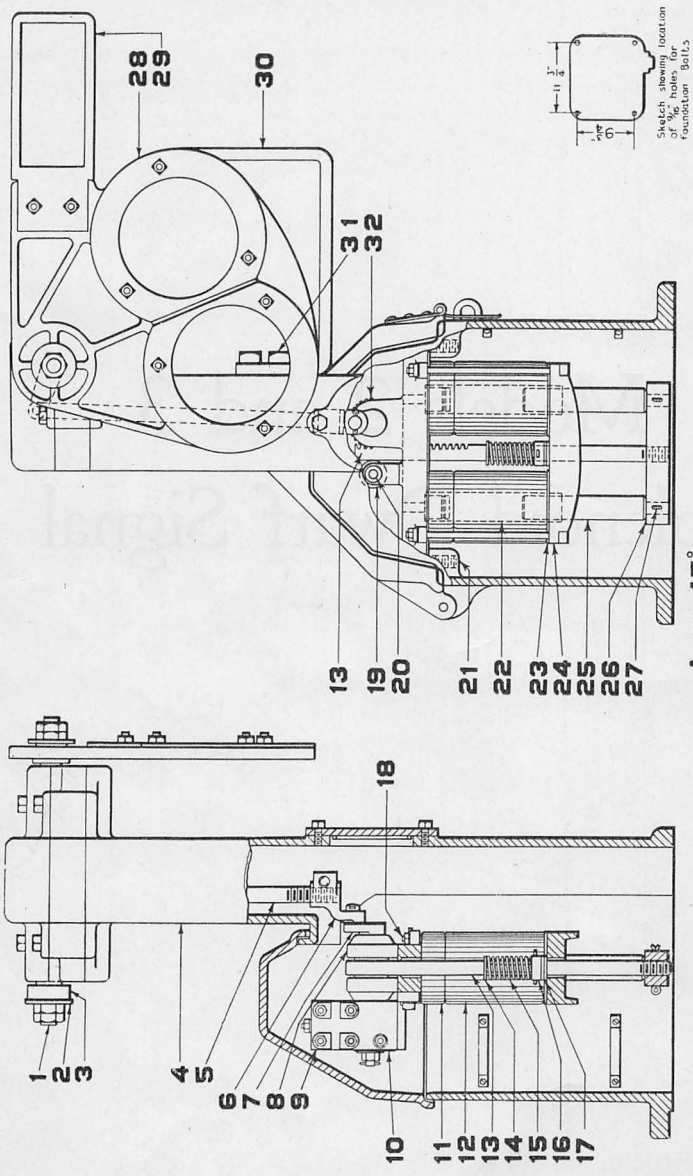

Model 2 Solenoid Dwarf Signal

April 1927 GENERAL RAILWAY SIGNAL COMPANY

Model 2 Solenoid Dwarf Signal

Upper and Lower Quadrant

Note: Unless otherwise specified, signal will be furnished as illustrated. Lamp, Roundels and foundation are not included. If signal other than that shown is desired, give reference numbers of spectacle and blade, also state number and color of roundels. See Sec. H, Part 18 for spectacles, blades and roundels.

In ordering shafts other than those shown, specify degree of throw and type of spectacle used.

For Detail Parts see Plate H0803.

Drawing references are shown for convenience in checking shipping lists and invoices.

Fig. No.	Name	Drawing Reference
	Order by plate, figure number and name	
A	Model 2 Solenoid Dwarf Signal Complete as shown equipped with Shaft, Lamp Bracket, and Upper Quadrant, two light, 45° throw Spectacle. For Spectacle see Plate H1812 Fig. C	28490
B	Model 2 Solenoid Dwarf Signal Complete, equipped with Shaft, Lamp Bracket, and Lower Quadrant, two light, 60° throw Spectacle as shown on Plate H1812, Fig. F	3658
C	Model 2 Solenoid Dwarf Signal Complete, equipped with Shaft, Lamp Bracket, and Upper Quadrant, three light, 2 position, 90° throw Spectacle as shown on Plate H1812, Fig. K	3673
1	Shaft Complete as shown. For details see Plate H0803, Figs. C, D and E. Give catalog reference for Spectacle used	
2	Washer for Shaft Fig. 1	087
3	Collar for Shaft Fig. 1	28069
4	Post Complete. For details see Plate H0803	
5	Operating Rod for 45° Spectacle	28559
5a	Operating Rod for 60° and 90° Spectacle	3665
6	Eye Complete with Cap Screw and Washer for Operating Rod Fig. 5	3664 2471 2145
7	Crank Shaft as shown. For details see Plate H0803, Figs. F, G and H	

(Continued on following page)

GENERAL RAILWAY SIGNAL COMPANY April 1927

Model 2 Solenoid Dwarf Signal

Upper and Lower Quadrant

Drawing references are shown for convenience in checking shipping lists and invoices.

Fig. No.	Name	Drawing Reference
	Order by plate, figure number and name	
8	Yoke Complete as shown. For detail see Plate H0803, Fig. J.	3412
9	Contact Block Complete as shown. For details see Plate H0803, Figs. L & M	
10	Commutator Complete. For details see Plate H0803, Fig. K.	3494
11	Retaining Coil as shown	4254
12	Operating Coil as shown	4255
13	Rack for operating Crank Shaft	3389
14	Washer for Rack Fig. 13	3481
15	Spring for Rack Fig. 13	3477
16	Collar for Rack Fig. 13	3401
17	Washer for Rack Fig. 13	3411
18	Bolt for fastening Cap Fig. 24 to Yoke Fig. 8. Includes Nut and Washer	
19	Roller used as guide for Rack Fig. 13. For detail see Plate H0803, Fig. 34	3391
20	Pin, for Roller Fig. 19. For detail see Plate H0803, Fig. 31	3392
21	Cap Screw. For detail see Plate H0803, Fig. 32	3259
22	Tube, for Coils as shown	4257
23	Washer for Coils	1567
24	Cap for Coils as shown	3374
25	Core as shown	3390
26	Yoke for Cores	3388
27	Cotter for fastening Yoke Fig. 26 to Cores Fig. 25	045
28	Spectacle Complete as shown. For details see Plate H1812. For Roundels see Plate H1822	
29	Rubber Blade Complete as shown. Includes Bolts, Nuts and Plate. See Plate H1818, Fig. 16	9199
30	Lamp Bracket as shown. Other Lamp Brackets will be furnished as required or as specified	28713
31	Cap Screw, for fastening Lamp Bracket Fig. 30 to Post Fig. 4.	0773
32	Gear for Crank Shaft Fig. 7. For detail see Plate H0803 Fig. 30	3385

Memoranda

PLATE H0803

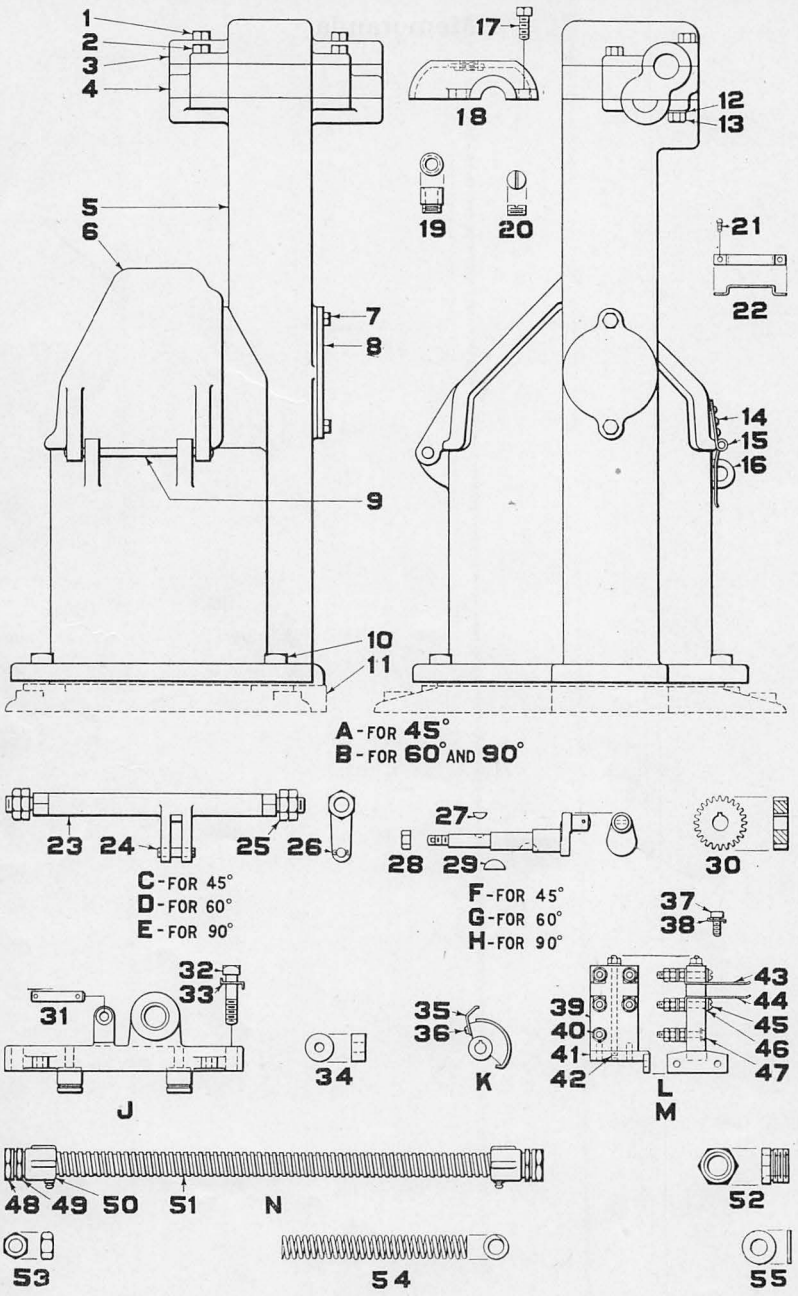

Model 2 Solenoid Dwarf Signal Detail Parts

April 1927 GENERAL RAILWAY SIGNAL COMPANY

Model 2 Solenoid Dwarf Signal

Detail Parts

Drawing references are shown for convenience in checking shipping lists and invoices.

Fig. No.	Name	Drawing Reference
	Order by plate, figure number and name	
A	Post Complete, without Water Tight Base, for 45° Spectacle. Includes Caps, Filler Block, Cover, Hasp, Staple, Cleats, Pin, Screws Bolts and Nuts. (2-1, 2-2, 1-3, 1-4, 1-5, 1-6, 2-7, 1-8, 1-9, 2-12, 2-13, 3-14, 1-15, 1-16, 4-21, 2-22).....	
A1	Post Complete, with Water Tight Base, for 45° Spectacle. (Parts same as above except addition of 4-10, 1-11).....	
B	Post Complete, without Water Tight Base, for 60° or 90° Spectacle. Includes Caps, Cover, Hasp, Staple, Pipe, Cleats, Pin, Screws, Bolts and Nuts. (1-5, 1-6, 2-7, 1-8, 1-9, 3-14, 1-15, 1-16, 4-17, 1-18, 1-19, 4-21, 2-22, 1-52)...	3709
B1	Post Complete, with Water Tight Base, for 60° or 90° Spectacle. (Parts same as above except addition of 4-10, 1-11)	6991
C	Shaft Complete as shown for 45° Spectacle. Includes Nuts and Pins. (1-23, 1-24, 4-25, 2-26).....	28498
D	Shaft Complete as shown for 60° Spectacle. Includes Nuts and Pins. (1-23a, 1-24, 4-25, 2-26).....	
E	Shaft Complete as shown for 90° Spectacle. Includes Nuts and Pins. (1-23b, 1-24, 4-25, 2-26).....	
F	Crank Shaft only for 45° Spectacle.....	28719
G	Crank Shaft only for 60° Spectacle.....	3382
H	Crank Shaft only for 90° Spectacle.....	3668
J	Yoke Complete as shown. Includes Upper Cores Complete...	3412 Gr 1
K	Commutator Complete as shown.....	3494 Gr 1
L	Contact Block Complete as shown with regular Contacts....	3486
M	Contact Block Complete with regular and reverse contacts	3487
N	Flexible Conduit Complete as shown. Includes Bushings, Nuts, and Screws. (2-48, 2-49, 2-50, 1-51).....	
1	Cap Screw, $\frac{3}{8}$" x $1\frac{1}{2}$" hex. hd., for fastening Cap Fig. 3 to Filler Block Fig. 4.....	6376

(Continued on following page)

GENERAL RAILWAY SIGNAL COMPANY April 1927

Model 2 Solenoid Dwarf Signal

Detail Parts

Drawing references are shown for convenience in checking shipping lists and invoices.

Fig. No.	Name	Drawing Reference
	Order by plate, figure number and name	
2	Cap Screw, $\frac{3}{8}$″ x $2\frac{1}{2}$″ hex. hd., for fastening Cap Fig. 3, through Filler Block Fig. 4 to Post Fig. 5	0280
3	Cap, for Post Fig. 5 for 45° Spectacle	28476
4	Filler Block, for use under Cap Fig. 3, for 45° Spectacle	28477
5	Post only as shown, for Figs. A and B	3659
5a	as above except for use with Water Tight Base as listed in Figs. A1 and B1	6488
6	Cover for Post as shown	3660
7	Cap Screw, $\frac{1}{4}$″ x $\frac{3}{4}$″ hex. hd., for fastening Cap Fig. 8 to Post Fig. 5	0394
8	Cap for Handhole in Post Fig. 5	3662
9	Rod for fastening Cover Fig. 6 to Post Fig. 5	3670
10	Bolt and Nut $\frac{1}{2}$″ x 2″ sq. hd., sq. nut, for fastening Post Fig. 5a to Base Fig. 11	011
11	Water Tight Base as shown for Figs. A1 and B1	6458
12	Lock Washer, $\frac{3}{8}$″ for Tap Bolt Fig. 13	0569
13	Tap Bolt, $\frac{3}{8}$″ x $1\frac{1}{4}$″ hex. for fastening Filler Block Fig. 4 to Post Fig. 5	0732
14	Rivet, $\frac{3}{16}$″ x $\frac{3}{4}$″ for Hasp Fig. 15	0166
15	Hasp as shown	085
16	Staple as shown for Hasp Fig. 15	2854
17	Cap Screw, $\frac{3}{8}$″ x 1″ hex. hd., for fastening Cap Fig. 18 to Post Fig. 5	2471
18	Cap for Post Complete Figs. B and B1	3661
19	Bushing for use when electric light wires are brought out through Cap	3974
20	Plug for hole in Cap when Bushing Fig. 19 is not used	3973
21	Screw for fastening Cleat Fig. 22 to Post Fig. 5	2435
22	Cleat for wires	19808
23	Shaft only for Fig. C	28499

(Continued on following page)

Model 2 Solenoid Dwarf Signal

Detail Parts

Drawing references are shown for convenience in checking shipping lists and invoices.

Fig. No.	Name	Drawing Reference
	Order by plate, figure number and name	
23a	as above, except for Fig. D	3384
23b	same as Fig. 23, except for Fig. E	3669
24	Pin for fastening Operating Rod to Shaft Fig. 23	18982
25	Nut, $\frac{5}{8}$″-11 x $\frac{3}{8}$″ thick, hex., for Shaft Fig. 23	1318
26	Cotter Pin $\frac{3}{32}$″ x $\frac{5}{8}$″, for Pin Fig. 24	035
27	Woodruff Key, No.3, for fastening Commutator Fig. K to Shaft	027
28	Nut $\frac{3}{8}$″-16 hex., for Crank Shaft	1156
29	Woodruff Key, No. 9 for fastening Gear Fig. 30 to Crank Shaft.	026
30	Gear for Crank Shaft	3385
31	Pin for Roller Fig. 34	3392
32	Cap Screw $\frac{1}{2}$″-13 x 2″ sq. hd., for fastening Yoke Fig. J to Post	3259
33	Lock Washer for Cap Screw Fig. 32	3049
34	Roller used as guide for Gear Rack	3391
35	Contact for Commutator Fig. K	3498
36	Screw for fastening Contact Fig. 35 to Commutator	2438
37	Cap Screw, $\frac{1}{4}$″-24 x $\frac{3}{4}$″ sq. hd., for fastening Contact-Blocks Figs. L and M to Yoke Fig. J	2762
38	Lock Washer for Screw Fig. 37	2848
39	Contact Block only for Figs. L and M	3490
40	Nut for terminal posts	20098
41	Bracket for Contact Block	3529
42	Stud for fastening Contact Block Fig. 39 to Bracket Fig. 41	3492
43	Upper Contact Spring, as shown	3462
44	Lower Contact Spring, as shown	3461
45	Screw, used as terminal post	3520
46	Washer, for terminal posts	1225
47	Screw used as terminal post	3965
48	Bushing as shown for Bushing Fig. 50	0456
49	Lock Nut, $\frac{3}{4}$″ hex. for Bushing Fig. 28	0826
50	Bushing Complete as shown with one Screw	43369

(Continued on following page)

GENERAL RAILWAY SIGNAL COMPANY April 1927

Model 2 Solenoid Dwarf Signal

Detail Parts

Drawing references are shown for convenience in checking shipping lists and invoices.

Fig. No.	Name	Drawing Reference
	Order by plate, figure number and name	
51	Flexible Conduit only as shown for Fig. N	44951
52	Bushing for wires when flexible conduit is not used	1768
53	Nut, $\frac{5}{8}$"-11 for Operating Rod Fig. 5a	3671
54	Spring for Operating Rod Fig. 5a	6081
55	Washer for Operating Rod Fig. 5a	2400

Memoranda

PLATE H0809

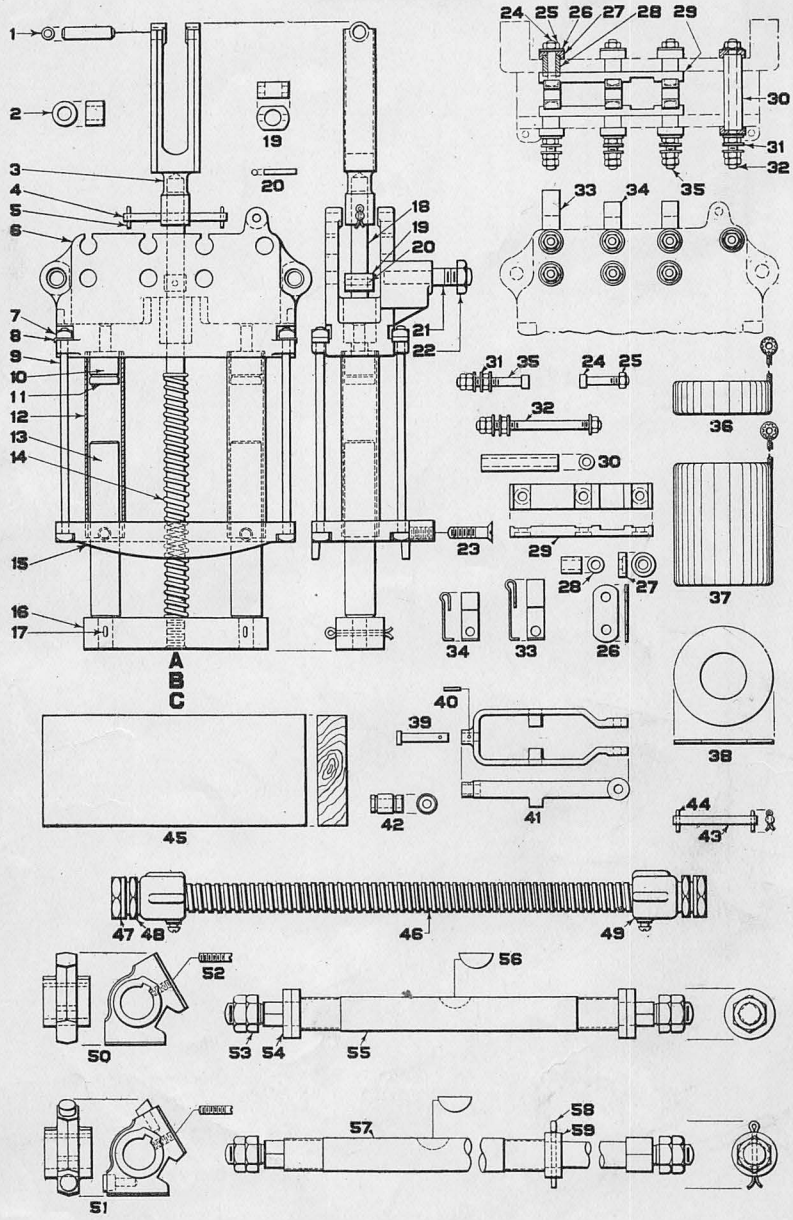

Model 3 Dwarf Signal Detail Parts

April 1927 GENERAL RAILWAY SIGNAL COMPANY

Model 3 Dwarf Signal

Detail Parts

Drawing references are shown for convenience in checking shipping lists and invoices.

Fig. No.	Name	Drawing Reference
	Order by plate, figure number and name	
A	Solenoid Frame Complete as shown for 45° Model 3 Dwarf Signal	12449-1
B	Solenoid Frame Complete as shown for 60° Model 3 Dwarf Signal	12449
C	Solenoid Frame Complete as shown for 90° Model 3 Dwarf Signal	12450
1	Roller Pin, $\frac{3}{8}''$ x $1\frac{15}{32}''$, for Operating Jaw Fig. 3 as shown	7388
2	Roller for Operating Jaw as shown	7403
3	Operating Jaw for use with either 45° or 60° Spectacle	9020
3a	Operating Jaw for use with 90° Spectacle	7418
4	Indication Contact Arm as shown	7382
5	Cotter Pin, $\frac{3}{32}''$ x $\frac{3}{4}''$, for Indication Contact Arm Fig. 4	036
6	Circuit Breaker Frame as shown	7374
7	Nut $\frac{1}{4}''$-24 x $\frac{1}{2}''$ sq. for Bolt Fig. 9	3893
8	Lock Washer, $\frac{1}{4}''$, for Nut Fig. 7	1925
9	Bolt, $\frac{1}{4}''$-24 x $6\frac{3}{8}''$ for fastening Frame Fig. 6 to Solenoid Cap Fig. 15	3654
10	Core as shown	1554
11	Residual Cap for Core Fig. 10	1555
12	Solenoid Tube as shown	4257
13	Plunger as shown for Solenoid Frame Comp. Figs. A, B or C	3390
14	Restoring Spring as shown for use with 45° Spectacle	33908
14a	Restoring Spring as shown for use with either 60° or 90° Spectacle	2577
15	Solenoid Cap as shown	7384
16	Solenoid Yoke for Lower Cores Fig. 13	7385
17	Cotter Pin, $\frac{3}{16}''$ x $1\frac{3}{4}''$ for fastening Yoke Fig. 16 to Lower Cores Fig. 13	045
18	Operating Rod for use with 45° Spectacle	33907
18a	as above except for use with 60° Spectacle	9019
18b	same as Fig. 18, except for use with 90° Spectacle	7419

(Continued on following page)

GENERAL RAILWAY SIGNAL COMPANY April 1927

Model 3 Dwarf Signal

Detail Parts

Drawing references are shown for convenience in checking shipping lists and invoices.

Fig. No.	Name	Drawing Reference
	Order by plate, figure number and name	
19	Operating Collar as shown	7402
20	Pin for fastening Collar Fig. 19 to Operating Rod Fig. 18	7399
21	Stud for fastening Circuit Breaker Frame Fig. 6 to Post	7711
22	Nut, $\frac{1}{2}$″-13 x $\frac{1}{4}$″ thick hex., for Stud Fig. 21	7244
23	Screw, $\frac{3}{8}$″-16 x $1\frac{1}{4}$″ fl. hd., for fastening Cap Fig. 15 to Post	2473
24	Bolt, $\frac{1}{4}$″-24 x $1\frac{7}{16}$″ sq. hd., for Contacts	21713
25	Nut, $\frac{1}{4}$″-24 x $\frac{3}{16}$″ thick hex., for Bolts Figs. 24, 32 and 35	20098
26	Connecting Link for Bolts Figs. 24 and 32	7381
27	Insulating Washer as shown for Bolts Figs. 24, 32 and 35	6704
28	Insulating Bushing for Bolts Figs. 24 and 35 as shown	7391
29	Insulating Block as shown for Bolts Figs. 24 and 35	7371
30	Insulating Bushing for Bolt Fig. 32 as shown	7372
31	Washer, $\frac{1}{4}$″, for Bolts Figs. 32 and 35 as shown	1225
32	Bolt, $\frac{1}{4}$″-24 x $3\frac{3}{4}$″ headless, as shown	7411
33	Contact Spring (long), as shown	7379
34	Contact Spring (short), as shown	7710
35	Bolt, $\frac{1}{4}$″-24 x $1\frac{15}{16}$″ sq. hd., for Contacts as shown	7390
36	Retaining Coil as shown	4254
37	Operating Coil as shown	4255
38	Fibre Washer for Coils Figs. 36 and 37	1567
39	Pin, for Control Contact Arm Fig. 41	7392
40	Pin, $\frac{1}{16}$″ x $\frac{1}{2}$″, for fastening Pin Fig. 39 to Control Contact Arm Fig. 41	7425
41	Control Contact Arm as shown	7338
42	Contact Collar used on Indication Contact Arm Fig. 4 and Pin Fig. 39	12390
43	Pin, $\frac{1}{4}$″ x $2\frac{1}{2}$″, shaft for Arm Fig. 41	7386
44	Cotter Pin, $\frac{3}{32}$″ x $\frac{1}{2}$″, for Pin Fig. 43	034
45	Filler Block for 45° Signal	33909
45a	Filler Block for 60° Signal	9056

(Continued on following page)

April 1927 GENERAL RAILWAY SIGNAL COMPANY

Model 3 Dwarf Signal

Detail Parts

Drawing references are shown for convenience in checking shipping lists and invoices.

Fig. No.	Name	Drawing Reference
	Order by plate, figure number and name	
46	Flexible Conduit Complete as shown. Includes Bushings, Nuts, Screws and Conduit. (1-46a, 2-47, 2-48, 2-49)....	42387
46a	Flexible Conduit only as shown for Fig. 46.....	44951
47	Bushing as shown for Bushing Fig. 49.....	0456
48	Lock Nut, $\frac{3}{4}''$ hex., for Bushing Fig. 49.....	0826
49	Bushing Complete as shown with one Screw, No. 14-24 x $\frac{1}{2}''$ rd. hd.....	43369
50	Crank for operating 60° Spectacle.....	9018
50a	Crank for operating 90° Spectacle.....	7398
51	Crank for operating 45° Spectacle.....	42128 Gr 1
52	Headless Screw for fastening Cranks Figs. 50 and 51 to Shaft...	12250
53	Nut, $\frac{5}{8}''$-11 hex. for Shaft as shown.....	1318
54	Washer for Shaft as shown.....	6565
55	Shaft Complete for operating 60° Spectacle.....	9078
55a	Shaft Complete for operating 90° Spectacle.....	9079
56	Woodruff Key, $\frac{1}{4}''$ x 1″ for Shaft as shown.....	0402
57	Shaft Complete for 45° A. R. A. Spectacle shown on Plate H1812.....	
58	Cotter Pin, $\frac{1}{8}''$ x $1\frac{3}{4}''$, as shown.....	0780
59	Bushing for Shaft as shown.....	21954

Memoranda

March 1916 GENERAL RAILWAY SIGNAL COMPANY

Model 2A, Direct-Current, Top-of-Mast

Signal Mechanism

8 volts, 10 volts or 20 volts

Circuit controller is equipped with the contacts necessary for the local control of the signal only. Maximum contact equipment is shown merely as a matter of information.

If pole changing contacts or extra drag contacts are required, same must be specified. State the positions of the signal arm at which each extra contact is to make and break, considering the stop position as 0 degree.

For Semaphore Oil and Oiling diagrams see Part 21 of this Section.

Drawing references are shown for convenience in checking shipping lists and invoices.

Fig. No.	Name	Drawing Reference
	Order by plate, figure number and name	
A	Model 2A, 8 volt, Signal Mechanism, complete as shown, includes Clamp Bearing. Specify Spectacle to be used, size of mast (4″, 5″ or 6″) and whether Signal is to operate in two or three positions. If lever controlled, state whether Dynamic or Battery Indication	29815
A1	as above, except without Clamp Bearing Complete Fig. K.	29816
A2	same as Fig. A, except with Spectacle, Blade and Lamp Bracket. Specify Spectacle and Blade required. (Spectacle does not include Roundels)	
B	same as Fig. A, except 10 volt	
B1	as above, except without Clamp Bearing Complete Fig. K.	
B2	same as Fig. B, except with Spectacle, Blade and Lamp Bracket. Specify Spectacle and Blade required. (Spectacle does not include Roundels)	
C	same as Fig. A, except 20 volt	
C1	as above, except without Clamp Bearing Complete Fig. K.	
C2	same as Fig. C, except with Spectacle, Blade and Lamp Bracket. Specify Spectacle and Blade required. (Spectacle does not include Roundels)	
D	Motor Complete (8 volts). For details see Plate H1301 Fig. A.	39500
E	Motor Complete (10 volts). For details see Plate H1301 Fig. B	29890
F	Motor Complete (20 volts). For details see Plate H1301 Fig. C.	30870

GENERAL RAILWAY SIGNAL COMPANY March 1916

Model 2A, Direct-Current, Top-of-Mast

Signal Mechanism

8 volts, 10 volts or 20 volts

Drawing references are shown for convenience in checking shipping lists and invoices.

Fig. No.	Name	Drawing Reference
	Order by plate, figure number and name	
G	Circuit Controller Complete. For details and specifications see Plate H1401	34610
H	Ratchet Gear Complete. For details see Plate H1001 Fig. A	30080
J	Intermediate Gear Complete. For details see Plate H1001 Fig. C	29965
K	Clamp Bearing Complete, includes Shaft, Driver, Spring Stop, U Bolts, Oil Cups and Bolts for fastening to Mechanism. Specify Spectacle to be used, size of mast (4″, 5″ or 6″) and whether for upper or lower quadrant Signal. For details see Plate H1705	34603
1	Case Complete, includes Cover, Side Door, Shield for Side Door, Hinge Pins, Stud for Intermediate Gear, Bushing for Main Shaft, Hasp, Strap and all necessary Bolts, Pins and Rivets for holding the same	42339
2	Cover, with Gasket	
3	Gasket, for Cover Fig. 2	
6	Side Door, with Gasket, Latches and Rivets	
6a	Latch, for Side Door Fig. 6	42018
6b	Rivet, $\frac{3}{16}$″ x $\frac{1}{2}$″ rd. hd., for fastening Latch Fig. 6a to Top of Door Fig. 6	0204
6c	Rivet, $\frac{3}{16}$″ x $\frac{3}{8}$″ rd. hd., for fastening Latch Fig. 6a to bottom of Door Fig. 6	0203
6d	Gasket, for Side Door Fig. 6	
8	Shield, for Side Door Fig. 6	30520
9	Screw, $\frac{1}{4}$″ x $\frac{1}{2}$″ rd. hd., for fastening Shield Fig. 8 to Case	2449
10	Hasp Tongue	16110
11	Strap, for Hasp Tongue Fig. 10	30804
12	Pin, $\frac{3}{8}$″ x $1\frac{11}{16}$″, for fastening Hasp Tongue Fig. 10 to Strap Fig. 11	7005
13	Pin, $\frac{3}{8}$″ x $2\frac{3}{8}$″, for fastening Strap Fig. 11 to Case	7567
14	Bushing, for Main Shaft Fig. 15	29835

March 1916 GENERAL RAILWAY SIGNAL COMPANY

Model 2A, Direct-Current, Top-of-Mast

Signal Mechanism

8 volts, 10 volts or 20 volts

Drawing references are shown for convenience in checking shipping lists and invoices.

Fig. No.	Name	Drawing Reference
	Order by plate, figure number and name	
15	Main Shaft, with one $\frac{3}{16}''$ x 2″ Cotter Pin, and two Woodruff Keys. For details see Plate H1003 Fig. 7a.	
16	Roller Bearing Complete, for Intermediate Gear Fig. J. For detail see Plate H1001 Fig. 12.	29998
17	Bearing Bracket Complete, includes Bushing and Oiler, for Main Shaft Fig. 15. For details see Plate H1003 Fig. 2.	29833
18	Dowel Screw, for fastening Bearing Bracket Fig. 17 to Case. For detail see Plate H1003 Fig. 11.	29849
19	Main Sector. For detail see Plate H1003 Fig. 1.	29830
20	Sector, for operating Circuit Controller. For detail see Plate H1003 Fig. 6.	29842
21	Cotter Pin, $\frac{3}{16}''$ x 2″, for Sector Fig. 20.	046
22	Stud, $\frac{1}{2}''$ x $2\frac{1}{8}''$, with hex. Nut and Washer, for fastening Circuit Controller to Case. For details see Plate H1003 Fig. 12a	
23	Stud, for supporting Ratchet Gear Fig. H. For detail see Plate H1003 Fig. 10.	29837
24	Washer, for Ratchet Gear Fig. H. For detail see Plate H1001 Fig. 11	30089
25	Machine Driver. For detail see Plate H1003 Fig. 3.	34627
26	Intermediate Driver. For detail see Plate H1003 Fig. 5.	29911
27	Partition, sheet iron. For detail see Plate H1001 Fig. 18.	30041
28	Dowel Screw, $\frac{3}{8}''$ x $1\frac{3}{8}''$ hex. hd., for fastening Motor to Case.	30049
29	Tap Bolt, $\frac{5}{8}''$ x 4″ hex. hd., for fastening Mechanism Case to Bearing	34675
30	Tap Bolt, $\frac{5}{8}''$ x $1\frac{3}{4}''$ hex. hd., for fastening Mechanism Case to Bearing	0664

Memoranda

Memoranda

PLATE H0903

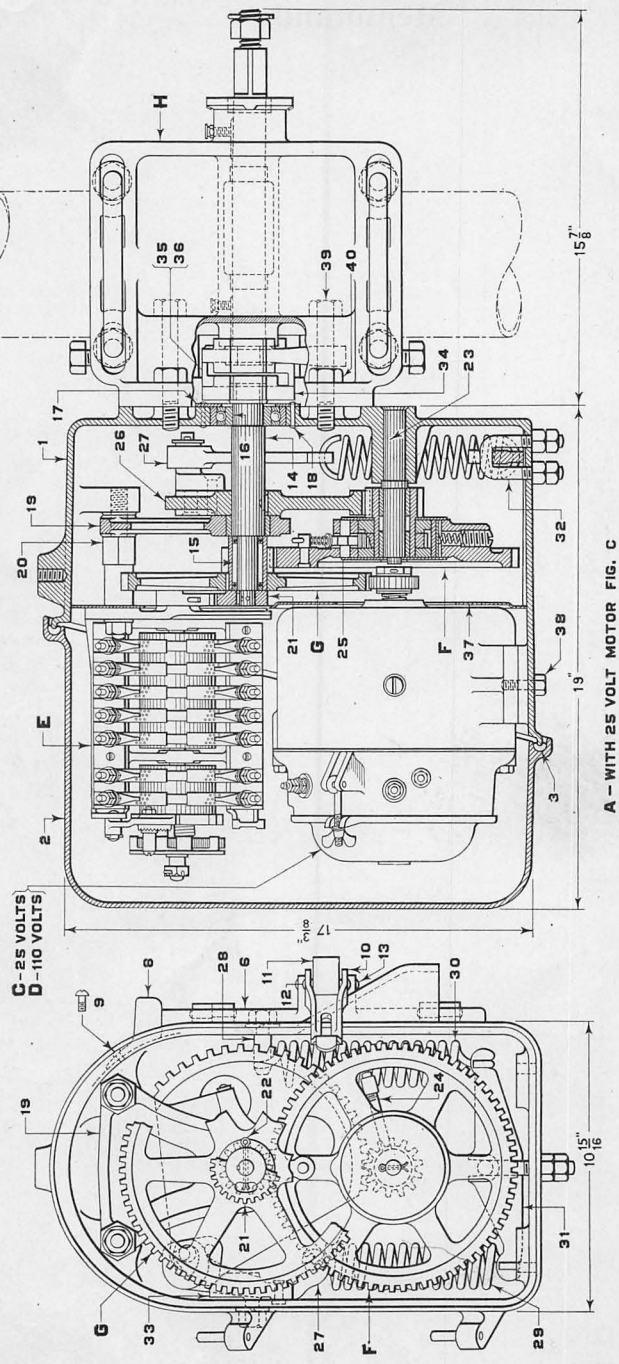

A - WITH 25 VOLT MOTOR FIG. C
B - WITH 110 VOLT MOTOR FIG. D

Model 2A, Direct-Current Signal Mechanism
25 volts or 110 volts

March 1916 GENERAL RAILWAY SIGNAL COMPANY

Model 2A, Direct-Current, Top-of-Mast

Signal Mechanism

25 volts or 110 volts

Circuit controller is equipped with the contacts necessary for the local control of the signal only. Maximum contact equipment is shown merely as a matter of information.

If pole changing contacts or extra drag contacts are required same must be specified. State the positions of the signal arm at which each extra contact is to make and break, considering the stop position as 0 degree.

13

For Semaphore Oil and Oiling diagrams see part 21 of this Section.

Drawing references are shown for convenience in checking shipping lists and invoices.

Fig. No.	Name	Drawing Reference
	Order by plate, figure number and name	
A	Model 2A, 25 volt, Signal Mechanism complete as shown, includes Clamp Bearing, complete as shown. Specify Spectacle to be used, size of mast (4″, 5″ or 6″) and whether Signal is to operate in two or three positions	
A1	as above, except without Clamp Bearing Complete Fig H.	
A2	same as Fig. A, except with Spectacle, Blade and Lamp Bracket. Specify Spectacle and Blade required. (Spectacle does not include Roundels)	
B	same as Fig. A, except 110 volt	
B1	as above, except without Clamp Bearing Complete Fig. H.	
B2	same as Fig. B, except with Spectacle, Blade and Lamp Bracket. Specify Spectacle and Blade required. (Spectacle does not include Roundels)	
C	Motor Complete (25 volts). For details see Plate H1304 Fig. A	35830
D	Motor Complete (110 volts). For details see Plate H1304 Fig. B	34605
E	Circuit Controller Complete. For details and specifications see Plate H1401	34610
F	Ratchet Gear Complete. For details see Plate H1001 Fig. A	30080
G	Intermediate Gear Complete. For details see Plate H1001 Fig. C	29965

GENERAL RAILWAY SIGNAL COMPANY March 1916

Model 2A, Direct-Current, Top-of-Mast

Signal Mechanism

25 volts or 110 volts

Drawing references are shown for convenience in checking shipping lists and invoices.

Fig. No.	Name	Drawing Reference
	Order by plate, figure number and name	
H	Clamp Bearing, complete with Shaft, Driver, Spring Stop, U Bolts, Oil Cups and Bolts for fastening to Mechanism. Specify Spectacle to be used, size of mast, (4″, 5″ or 6″) and whether for upper or lower quadrant Signal. For details see Plate H1705	34603
1	Case, complete with Cover, Side Door, Shield for Side Door, Hinge Pins, Stud for Intermediate Gear, Plate for retaining Ball Bearing, Stop for Sector, Stud for Spring, Hasp, Strap and all necessary Bolts, Pins and Rivets for holding the same. For upper quadrant Signals	
1a	as above, except for lower quadrant Signals	
2	Cover, complete with Gasket	
3	Gasket, for Cover Fig. 2	
6	Side Door, with Gasket, Latches and Rivets	
6a	Latch, for Side Door Fig. 6	42018
6b	Rivet, $\frac{3}{16}$″ x $\frac{1}{2}$″ rd. hd., for fastening Latch Fig. 6a to top of Door Fig. 6	0204
6c	Rivet, $\frac{3}{16}$″ x $\frac{3}{8}$″ rd. hd., for fastening Latch Fig. 6a to bottom of Door Fig. 6	0203
6d	Gasket, for Side Door Fig. 6	
8	Shield, for Side Door Fig. 6	34639
9	Screw, $\frac{1}{4}$″ x $\frac{1}{2}$″ rd. hd., for fastening Shield Fig. 8 to Case	2449
10	Hasp Tongue	16110
11	Strap, for Hasp Tongue Fig. 10	30804
12	Pin, $\frac{3}{8}$″ x $1\frac{11}{16}$″, for fastening Hasp Tongue Fig. 10 to Strap Fig. 11	7005
13	Pin, $\frac{3}{8}$″ x $2\frac{3}{8}$″, for fastening Strap Fig. 11 to Case	7567
14	Main Shaft, with one $\frac{3}{16}$″ x $1\frac{1}{4}$″ Cotter Pin and two Woodruff Keys. For details see Plate H1005 Fig. 7a	
15	Roller Bearing Complete, for Intermediate Gear Fig. G. For detail see Plate H1001 Fig. 12	29998

March 1916 GENERAL RAILWAY SIGNAL COMPANY

Model 2A, Direct-Current, Top-of-Mast

Signal Mechanism

25 volts or 110 volts

Drawing references are shown for convenience in checking shipping lists and invoices.

Fig. No.	Name	Drawing Reference
	Order by plate, figure number and name	
16	Ball Bearing Complete, for Main Shaft Fig. 14. For detail see Plate H1005 Fig. 10	47795
17	Plate, for retaining Ball Bearing Fig. 16. For detail see Plate H1005 Fig. 11	34635
18	Rivet, $\frac{3}{16}''$ x 1″ rd. hd., for fastening Plate Fig. 17 to Case	26709
19	Bearing Bracket, complete with Bushing and Oiler, for Main Shaft Fig. 14. For details see Plate H1005 Fig. 3	34637
20	Stud, with hex. Nut and Washer, for fastening Bearing Bracket Fig. 19 and Circuit Controller Fig. E to Case. For details see Plate H1005 Fig. 5	
21	Sector, for operating Circuit Controller. For details see Plate H1005 Fig. 4	34646
22	Cotter Pin, $\frac{3}{16}''$ x $1\frac{3}{4}''$, for Sector Fig. 21	045
23	Stud for Ratchet Gear Fig. F. For detail see Plate H1005 Fig. 6	34628
24	Oiler Complete. For detail see Plate H1005 Fig. 13	32417
25	Washer, for Ratchet Gear Fig. F. For detail see Plate H1001 Fig. 11	30089
26	Main Sector Complete, includes Hanger Block, Screw, Washer and Cotter Pin. For detail see Plate H1005 Fig. 1	
27	Hook Arm, for Spring Fig. 29. For detail see Plate H1005 Fig. 14	34623
28	Stud, with hex. Nut and Lock Washer, for Spring Fig. 30. For details see Plate H1005 Fig. 16	
29	Spring, short. For details see Plate H1005 Fig. 17	34632
30	Spring, long. For detail see Plate H1005 Fig. 18	34633
31	Lever, for Springs Fig. 29 and Fig. 30. For detail see Plate H1005 Fig. 19	34630
32	U Bolt, with four $\frac{1}{2}''$ hex. Nuts, for Lever Fig. 31. For details see Plate H1003 Fig. 20	

GENERAL RAILWAY SIGNAL COMPANY March 1916

Model 2A, Direct-Current, Top-of-Mast

Signal Mechanism

25 volts or 110 volts

Drawing references are shown for convenience in checking shipping lists and invoices.

Fig. No.	Name	Drawing Reference
	Order by plate, figure number and name	
33	Stop, with Stud, hex. Nut and Lock Washer, for Main Sector Fig. 26. For details see Plate H1005 Fig. 15	
34	Machine Driver. For detail see Plate H1005 Fig. 25	34627
35	Intermediate Driver, for upper quadrant right hand and lower quadrant left hand Mechanisms. For detail see Plate H1005 Fig. 21	35925
36	Intermediate Driver, for lower quadrant right hand and upper quadrant left hand Mechanisms. For detail see Plate H1005 Fig. 22	35924
37	Partition, sheet iron. For detail see Plate H1001 Fig. 18	30041
38	Dowel Screw, $\frac{3}{8}''$ x $1\frac{3}{8}''$ hex. hd., for fastening Motor to Case	30049
39	Tap Bolt, $\frac{5}{8}''$ x $4''$ hex. hd., for fastening Mechanism Case to Bearing	34675
40	Tap Bolt, $\frac{5}{8}''$ x $1\frac{3}{4}''$ hex. hd., for fastening Mechanism Case to Bearing	0664

Section H, Part 10

Supersedes Section H Part 2 and 3
Dated June 1911 and July 1912

Model 2A, Top-of-Mast Signal Mechanism Details

PLATE H1001

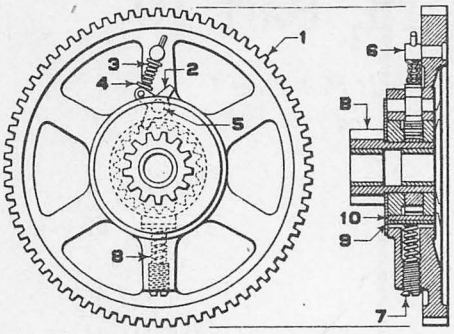

A—RATCHET GEAR COMP.

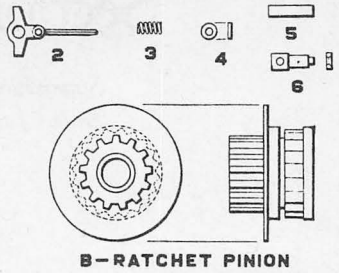

B—RATCHET PINION

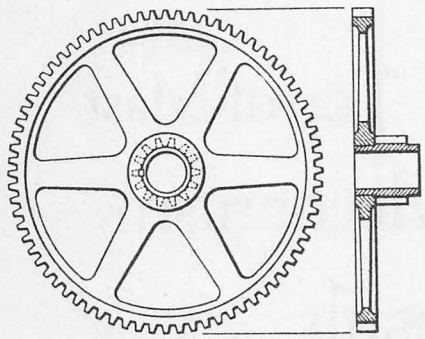

C—INTERMEDIATE GEAR COMP.

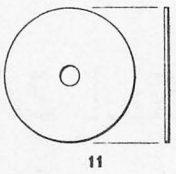

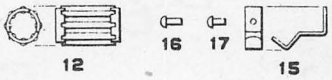

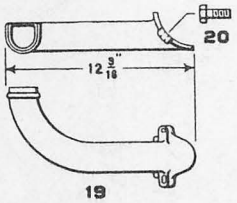

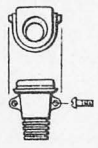

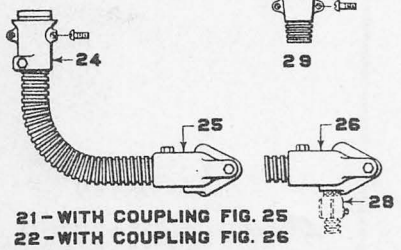

21—WITH COUPLING FIG. 25
22—WITH COUPLING FIG. 26

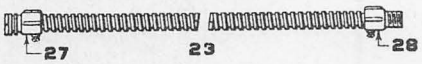

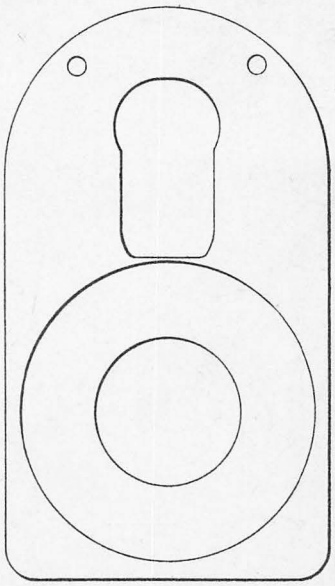

Model 2A Signal Mechanism—Details

March 1916 GENERAL RAILWAY SIGNAL COMPANY

Model 2A, Top-of-Mast

Signal Mechanism Details

Note. Details as illustrated on opposite page are used with top of mast signal mechanisms and dwarf signals as shown on Plates H0701, H0703, H0901 and H0903.

Drawing references are shown for convenience in checking shipping lists and invoices.

Fig. No.	Name	Drawing Reference
	Order by plate, figure number and name	
A	Ratchet Gear Complete as shown. (1-B, 1-1, 1-2, 1-3, 2-4, 1-5, 1-6, 1-7, 1-8, 1-9, 1-10)	30080
B	Ratchet Pinion, for Ratchet Gear Fig. A	30079
C	Intermediate Gear Complete as shown	29965
C1	as above, except with Roller Bearing Fig. 12	
1	Ratchet Gear only, for Fig. A	30081
2	Pawl Complete as shown, for Ratchet Gear Fig. A	42438
3	Spring, for Ratchet Gear Fig. A	30875
4	Washer, $\frac{3}{16}''$, for Spring Fig. 3	15394
5	Pin, $\frac{3}{8}''$ x $1\frac{3}{8}''$, for fastening Pawl Fig. 2 to Gear Fig. 1	30521
6	Stud, with Collar, for Ratchet Gear Fig. A	
7	Set Screw, $\frac{5}{8}''$ x $\frac{1}{2}''$, headless, for holding Spring Fig. 8	35966
8	Spring, for Brake Shoe Fig. 10	30090
9	Backing Plate, for Brake Shoe Fig. 10	30085
10	Brake Shoe, for Ratchet Gear Fig. A	30086
11	Washer, for Ratchet Gear Fig. A	30089
12	Roller Bearing Complete, for Intermediate Gear Fig. C	29998
15	Latch, for Side Door	42018
16	Rivet, $\frac{3}{16}''$ x $\frac{1}{2}''$ rd. hd., for fastening Latch Fig. 15 to top of Side Door	0204
17	Rivet, $\frac{3}{16}''$ x $\frac{3}{8}''$ rd. hd., for fastening Latch Fig. 15 to bottom of Side Door	0203
18	Partition, sheet iron	30041
19	Wire Conduit, for carrying wires from Mast to Signal Mechanism	34337
19a	as above, except with two Tap Bolts Fig. 20	
20	Tap Bolt, $\frac{3}{8}''$ x 1″ hex. hd. for fastening Wire Conduit Fig. 19 to Signal Mast	0597

GENERAL RAILWAY SIGNAL COMPANY March 1916

Model 2A, Top-of-Mast

Signal Mechanism Details

Drawing references are shown for convenience in checking shipping lists and invoices.

Fig. No.	Name	Drawing Reference
	Order by plate, figure number and name	
21	Wire Conduit Complete as shown for carrying wires from Signal Mast to Signal Mechanism on Signals giving right hand indication. (1-21b, 1-24, 1-25)	
21a	as above, except for Signals giving left hand indication (1-21c, 1-24, 1-25)	
21b	Conduit only, $1\frac{1}{2}''$ inside diameter, 20″ long, for Conduits Complete Fig. 21 and Fig. 22	43355
21c	Conduit only, $1\frac{1}{2}''$ inside diameter, $23\frac{1}{2}''$ long, for Conduits Complete Fig. 21a and Fig. 22a	43356
22	Wire Conduit Complete, same as Fig. 21 except with Coupling Fig. 26 in place of Fig. 25. Used in connection with Conduit Fig. 23 for carrying Wires from Signal Mast to Electric Light on Signals giving right hand indication. (1-21b, 1-24, 1-26)	
22a	as above, except for Signals giving left hand indication. (1-21c, 1-24, 1-26)	
23	Wire Conduits Complete as shown. Used in connection with Conduits Fig. 22 and Fig. 22a for carrying wires from Signal Pole to Electric Light. (1-23a, 1-27, 1-28)	41659
23a	Conduit only, $\frac{3}{4}''$ inside diameter, 2′-7″ long, for Conduit Complete Fig. 23	43368
24	Coupling, with two $\frac{1}{4}''$ x 1″ rd. hd. Screws and one $\frac{3}{8}''$ x 1″ hex. hd. Tap Bolt, used on Signal Mechanism end of Conduits Figs. 21, 21a, 22 and 22a	43357
25	Coupling with one $\frac{3}{8}''$ x 1″ hex. hd. Tap Bolt. Used on Signal Mast end of Conduits Fig. 21 and Fig. 21a	43359
26	Coupling, with one $\frac{3}{8}''$ x 1″ hex. hd. Tap Bolt and tapped hole for Conduits Fig. 22 and Fig. 22a	43358
27	Connector, with Bushing, Lock Nut and one No. 14 x $\frac{3}{8}''$ rd. hd., Screw. Used on Electric Light end of Conduit Fig. 23	
28	Connector, with one No. 14 x $\frac{3}{8}''$ rd. hd. Screw. Used on Signal Mast end of Conduit Fig. 23	43369
29	Coupling, with two $\frac{1}{4}''$ x $\frac{5}{8}''$ rd. hd. Screws. Used as Wire Inlet to Mechanism Case	35890

Memoranda

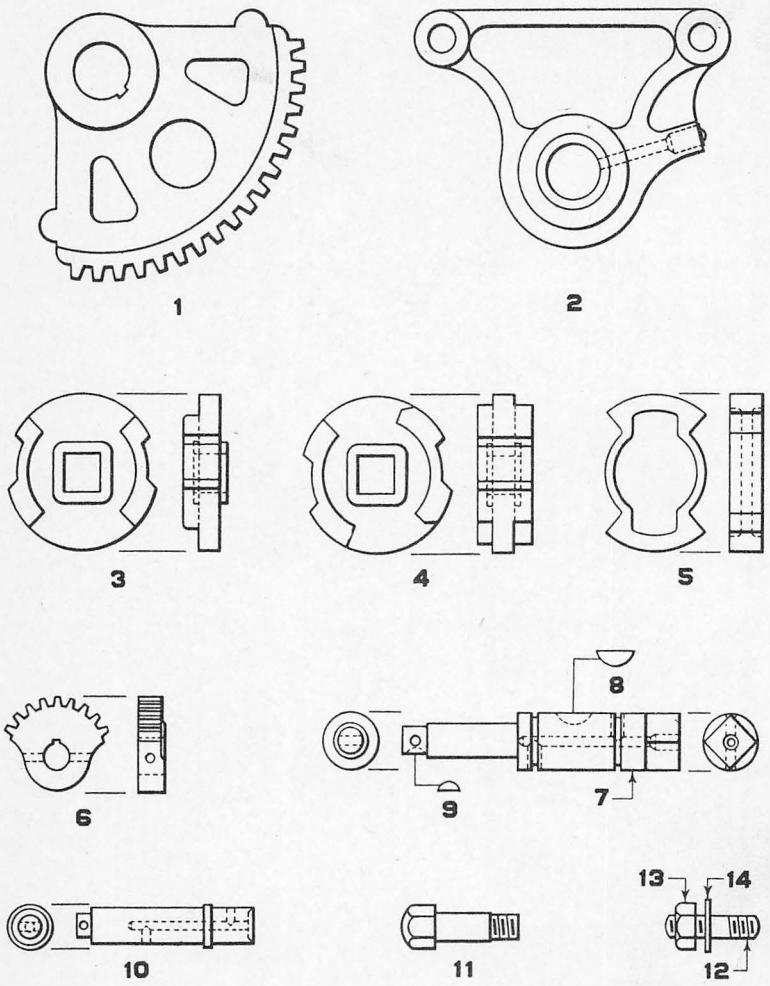

Model 2A Signal Mechanism—Details

March 1916 GENERAL RAILWAY SIGNAL COMPANY

Model 2A, Top-of-Mast

Signal Mechanism Details

Note: Details as illustrated on opposite page are used with top of mast signal mechanism and dwarf signal mechanism as shown on Plates H0701 and H0901.

Drawing references are shown for convenience in checking shipping lists and invoices.

Fig. No.	Name	Drawing Reference
	Order by plate, figure number and name	
1	Main Sector, for operating Main Shaft Fig. 7	29830
2	Bearing Bracket, complete with Bushing and Oiler, for supporting Main Shaft Fig. 7	29833
2a	Oiler, for Bearing Bracket Fig. 2	0803
3	Machine Driver, used with Inside Stop Bearing on Top of Mast Signal Mechanism as shown on Plate H0901	34627
4	Machine Driver, used with Dwarf Signal and with Outside Stop Bearing on Top of Mast Signal Mechanism, as shown on Plates H0701 and H0901	29912
5	Intermediate Driver	29911
6	Sector, for operating Circuit Controller	29842
7	Main Shaft	29839
7a	as above, except with one $\frac{3}{16}''$ x 2″ Cotter Pin and Woodruff Keys Fig. 8 and Fig. 9	
8	Woodruff Key, for fastening Main Sector Fig. 1 to Shaft	028
9	Woodruff Key, for fastening Sector Fig. 6 to Shaft	027
10	Stud, for supporting Ratchet Gear	29837
11	Dowel Screw, $\frac{5}{8}''$ x $1\frac{7}{8}''$ hex. hd., for fastening Bearing Bracket Fig. 2 to Mechanism Case	29849
12	Stud, for fastening Circuit Controller to Mechanism Case	14934
12a	as above, except with Nut and Washer	
13	Nut, $\frac{1}{2}''$ hex., for Stud Fig. 12	0286
14	Washer, $\frac{1}{2}''$, for Stud Fig. 12	17492

GENERAL RAILWAY SIGNAL COMPANY March 1916

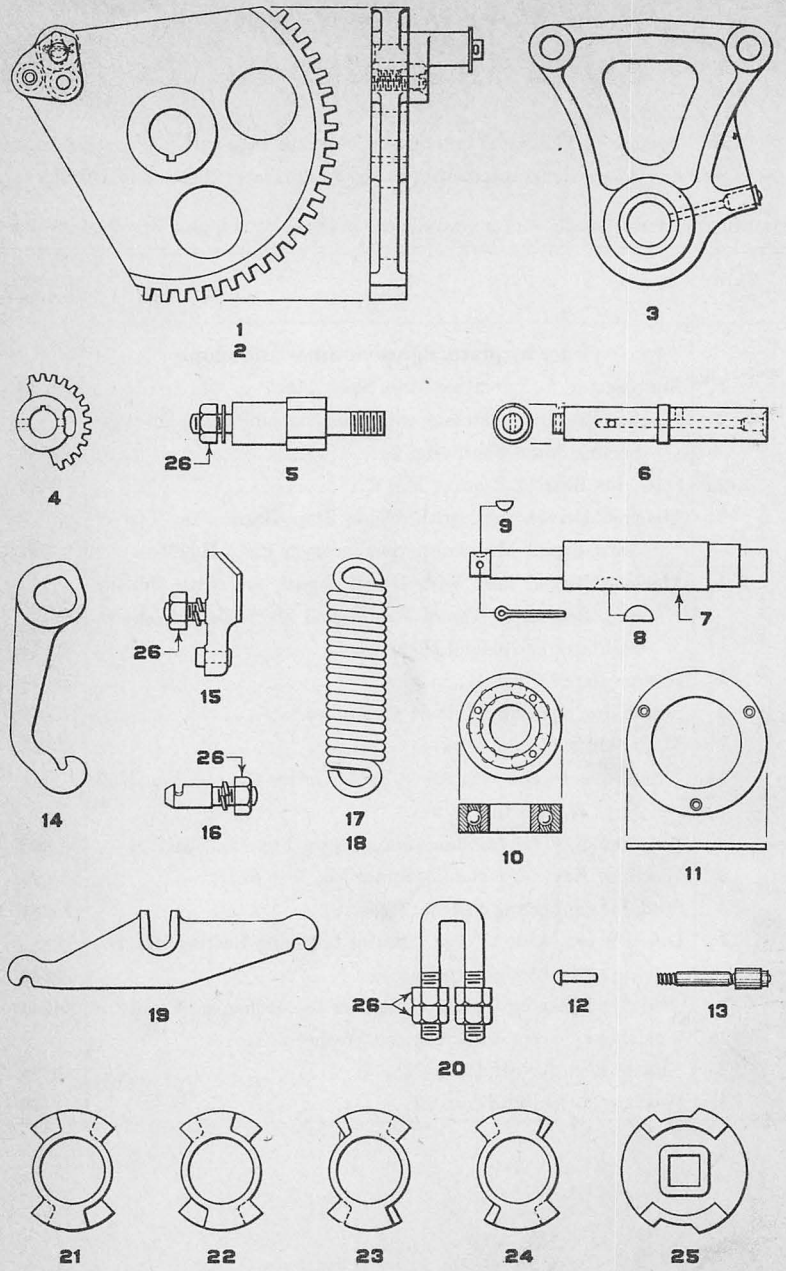

Model 2A Signal Mechanism—Details

Fig 16 PL-H1005 – Hook arm for Spring Fig 17
Fig 17 " " " Short Spring
Fig 18 " " Long arm
Fig 19 " " Lever.

Fig G & H. PL 3115 C
Arms.

PLATE H0901

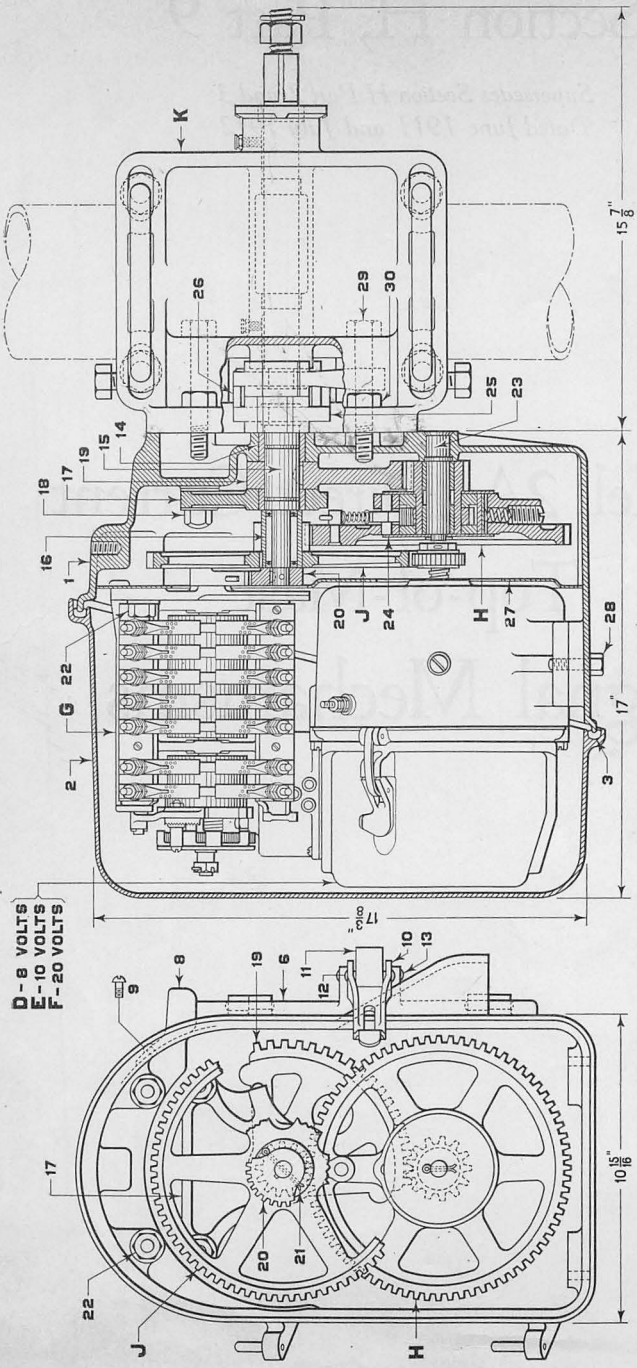

A-WITH 8 VOLT MOTOR FIG. D
B-WITH 10 VOLT MOTOR FIG. E
C-WITH 20 VOLT MOTOR FIG. F

Model 2A, Direct-Current, Top-of-Mast Signal Mechanism
8 volts, 10 volts or 20 volts

Section H, Part 9

Supersedes Section H Part 2 and 3
Dated June 1911 and July 1912

Model 2A, Direct-Current Top-of-Mast Signal Mechanisms

March 1916 GENERAL RAILWAY SIGNAL COMPANY

Model 2A, Top-of Mast

Signal Mechanism Details

Note: Details as illustrated on opposite page are used with top of mast signal mechanism and dwarf signal as shown on Plates H0703 and H0903.

Drawing references are shown for convenience in checking shipping lists and invoices.

Fig. No.	Name	Drawing Reference
	Order by plate, figure number and name	
1	Main Sector Complete as shown, for upper quadrant right hand and lower quadrant left hand Signals. Includes Hanger Block, Screws, Cotter Pin and Washer, for operating Main Shaft Fig. 7	
2	same as Fig. 1, except for lower quadrant right hand and upper quadrant left hand Signals	
3	Bearing Bracket Complete, includes Bushing and Oiler, for supporting Main Shaft Fig. 7	34637
3a	Oiler, for Bearing Bracket Fig. 3	0803
4	Sector, for operating Circuit Controller	34646
5	Stud, with hex. Nut and Washer, for fastening Bearing Bracket Fig. 3 and Circuit Controller to Case	
5a	as above, Stud only	34636
6	Stud, for supporting Ratchet Gear	34628
7	Main Shaft	34624
7a	as above, except with one $\frac{3}{16}''$ x $1\frac{3}{4}''$ Cotter Pin and Woodruff Keys Fig. 8 and Fig. 9	
8	Woodruff Key, for fastening Main Sectors Fig. 1 and Fig. 2 to Main Shaft Fig. 7	028
9	Woodruff Key, for fastening Sector Fig. 4 to Main Shaft Fig. 7	027
10	Ball Bearing Complete, for Main Shaft Fig. 7	47795
11	Retaining Plate, for Ball Bearing Fig. 10	34635
11a	as above, except with three Rivets Fig. 12	
12	Rivet $\frac{3}{16}''$ x 1″ rd. hd., for fastening Retaining Plate Fig. 11 to Case	26709
13	Oiler Complete as shown, for Ratchet Gear	32417
14	Hook Arm, for Spring Fig. 17	34623

GENERAL RAILWAY SIGNAL COMPANY March 1916

Model 2A, Top-of-Mast

Signal Mechanism Details

Drawing references are shown for convenience in checking shipping lists and invoices.

Fig. No.	Name	Drawing Reference
	Order by plate, figure number and name	
15	Stop, with Stud, Lock Washer and hex. Nut for Sector Fig. 1 and Fig. 2	
15a	as above, Stop only	34622
16	Stud, with hex. Nut and Lock Washer, for Spring Fig. 18	
16a	as above, Stud only	34626
17	Spring, short	34632
18	Spring, long	34633
19	Lever, for Springs Fig. 17 and Fig. 18	34630
20	U Bolt, $\frac{1}{2}''$, with four hex. Nuts, for fastening Lever Fig. 19	
20a	as above, U Bolt only	34631
21	Intermediate Driver, used with Inside Stop Bearing Plate H1705 Fig. A, for upper quadrant right hand and lower quadrant left hand Signals. Used with Top of Mast Signal Mechanism shown on Plate H0903	35925
22	same as Fig. 21, except for lower quadrant right hand and upper quadrant left hand Signals	35924
23	Intermediate Driver, used with Outside Stop Bearing, for upper quadrant right hand and lower quadrant left hand Signals. Used with Top of Mast Signal Mechanism and Dwarf Signal shown on Plates H0703 and H0903	34634
24	same as Fig. 21, except for lower quadrant right hand and upper quadrant left hand Signals	35923
25	Machine Driver, used with Top of Mast Signal Mechanism and Dwarf Signal shown on Plates H0703 and H0903	34627
26	Nut, $\frac{1}{2}''$ hex., for use on Figs. 5, 15, 16 and 20	0286

Section H, Part 11

Supersedes Section H Part 6
Dated November 1913

Model A2, Direct-Current Base-of-Mast Signal Mechanisms

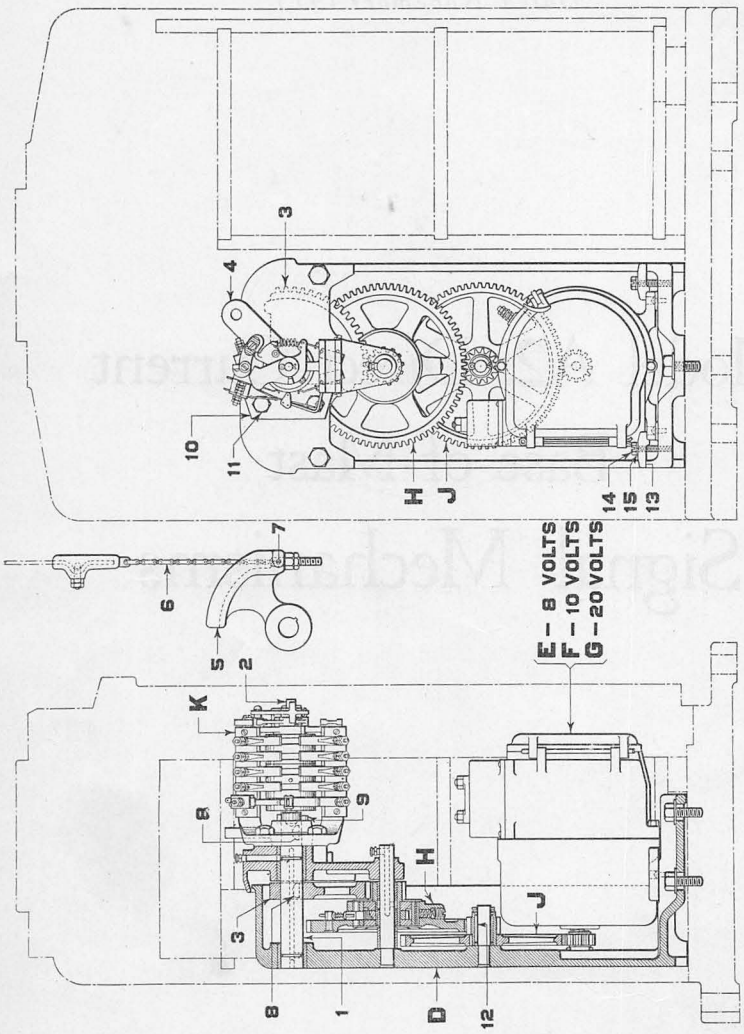

One Arm, Model 2A, Base-of-Mast Signal Mechanism

March 1916 GENERAL RAILWAY SIGNAL COMPANY

Model 2A, Direct-Current, Base-of-Mast

Signal Mechanisms

For One Arm Signals, 8 volts, 10 volts or 20 volts

Circuit controllers are equipped with the contacts necessary for the local control of the signal only. Maximum contact equipment is shown merely as a matter of information.

If pole changing contacts or extra drag contacts are required, same must be specified. State the positions of the signal blade at which each extra contact is to make and break, considering the stop position as 0 degree.

For Semaphore Oil and Oiling diagrams see Part 21 of this Section.

Drawing references are shown for convenience in checking shipping lists and invoices.

Fig. No.	Name	Drawing Reference
	Order by plate, figure number and name	
A	Model 2A 8 volt Signal Mechanism Complete, for One Arm Base of Mast Signals. Specify Spectacle to be used and whether Signal is to operate in two or three positions. If lever controlled state whether Dynamic or Battery Indication.....	
A1	same as Fig. A., except with Mechanism Case Plate H1601 Fig. A and Shelving Plate H1603 Fig. A	
A2	same as Fig. A, except with Mechanism and Battery Case Plate H1601 Fig. B and Shelving Plate H1603 Fig. A	
B	same as Fig. A, except 10 volt.....	
B1	same as Fig. B, except with Mechanism Case Plate H1601 Fig. A and Shelving Plate H1603 Fig. A	
B2	same as Fig. B, except with Mechanism and Battery Case Plate H1601 Fig. B and Shelving Plate H1603 Fig. A	
C	same as Fig. A, except 20 volt.....	
C1	same as Fig. C, except with Mechanism Case Plate H1601 Fig. A and Shelving Plate H1603 Fig. A	
C2	same as Fig. C, except with Mechanism and Battery Case Plate H1601 Fig. B and Shelving Plate H1603 Fig. A ...	
D	Frame Complete, includes Bearing, Stud, Bushings, etc. For details see Plate H1201 Fig. A.	
E	Motor Complete (8 volts). For details see Plate H1301 Fig. A1.	
F	Motor Complete (10 volts). For details see Plate H1301 Fig. B1.....	36000

GENERAL RAILWAY SIGNAL COMPANY March 1916

Model 2A, Direct-Current, Base-of-Mast

Signal Mechanisms

For One Arm Signals, 8 volts, 10 volts or 20 volts

Drawing references are shown for convenience in checking shipping lists and invoices.

Fig. No.	Name	Drawing Reference
	Order by plate, figure number and name	
G	Motor Complete (20 volts). For details see Plate H1301 Fig. C1	
H	Ratchet Gear Complete. For details see Plate H1203 Fig. A	30080
J	Intermediate Gear Complete. For details see Plate H1203 Fig. C	29965
K	Circuit Controller. For details and specifications see Plate H1405	
1	Main Shaft. For details see Plate H1203 Fig. 14	36458
1a	as above, except with two Woodruff Keys Fig. 8 and one Pin Fig. 9	
2	Shaft, for Circuit Controller. For detail see Plate H1405 Fig. 6.	36459
3	Sector. For detail see Plate H1203 Fig. 11	29830
4	Crank, for pipe or rod connected Signals. For details see Plate H1203 Fig. 25	36055
5	Sheave Sector, for upper quadrant wire connected Signals. For detail see Plate H1203 Fig. 22	40646
5a	as above, except with Set Screw Fig. 7	
6	Connector Complete, for upper quadrant wire connected Signals. For details see Plate H1203 Fig. 23	42019
7	Set Screw, $\frac{1}{4}''$ x $\frac{5}{8}''$, for Sheave Sector Fig. 5	18981
8	Woodruff Key, for Sector Fig. 3, Crank Fig. 4 and Sheave Sector Fig. 5	028
9	Pin, for connecting Shaft Fig. 2 to Main Shaft Fig. 1	42146
10	Frame, for Circuit Controller	36063
10a	as above, except with two Cap Screws Fig. 11	
11	Cap Screw, $\frac{1}{2}''$ x $1\frac{1}{4}''$ hex. hd., for fastening Circuit Controller Frame Fig. 10 to Bracket	5255
12	Roller Bearing Complete, for Intermediate Gear Fig. J. For details see Plate H1203 Fig. 13	29998

March 1916 GENERAL RAILWAY SIGNAL COMPANY

Model 2A, Direct-Current, Base-of-Mast

Signal Mechanisms

For One Arm Signals, 8 volts, 10 volts or 20 volts

Drawing references are shown for convenience in checking shipping lists and invoices.

Fig. No.	Name	Drawing Reference
	Order by plate, figure number and name	
13	Clamp, for holding Motor to Frame. For details see Plate H1203 Fig. 27	36061
13a	as above, except with Tap Bolt and Lock Washer. (1-13, 1-14, 1-15)	
14	Tap Bolt, $\frac{3}{8}''$ x $1\frac{3}{4}''$ hex. hd., slotted, for holding Clamp Fig. 13	36062
14a	as above, except with Lock Washer Fig. 15	
15	Lock Washer, for Bolt Fig. 14	0569

Memoranda

Memoranda

GENERAL RAILWAY SIGNAL COMPANY March 1916

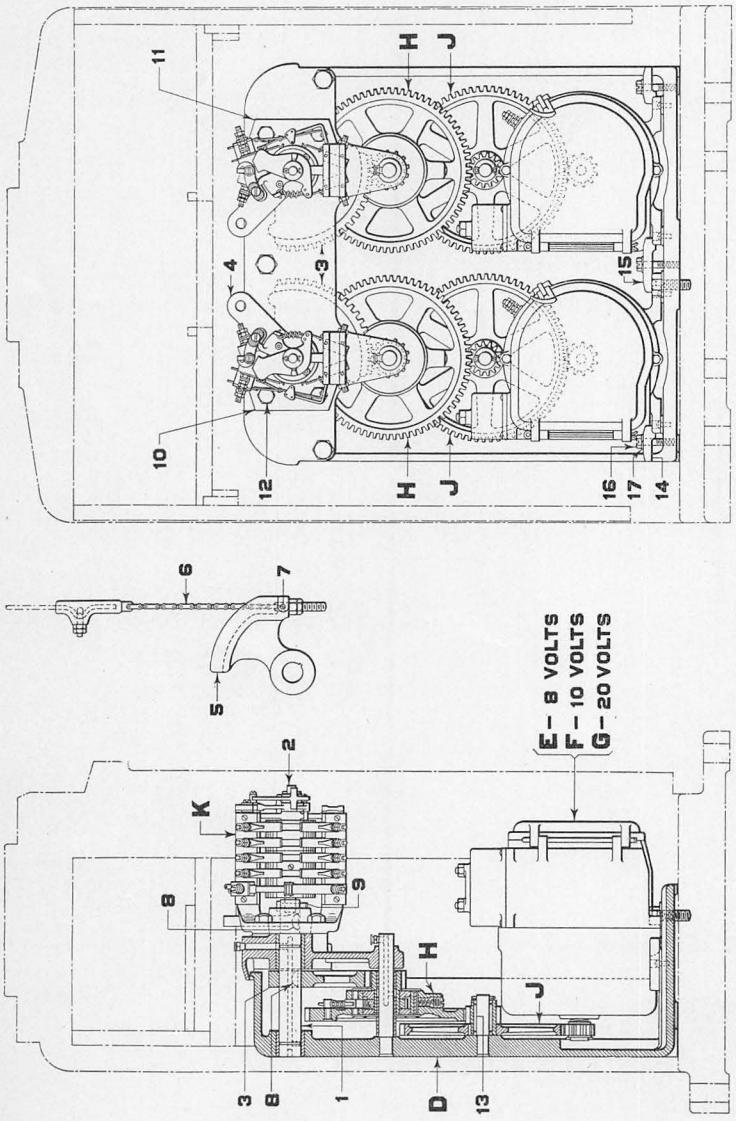

A – WITH 8 VOLT MOTOR FIG. E
B – WITH 10 VOLT MOTOR FIG. F
C – WITH 20 VOLT MOTOR FIG. G

Two-Arm, Model 2A, Base-of-Mast Signal Mechanism

March 1916 GENERAL RAILWAY SIGNAL COMPANY

Model 2A, Direct-Current, Base-of-Mast

Signal Mechanisms

For Two Arm Signal, 8 volts, 10 volts or 20 volts

Circuit controllers are equipped with the contacts necessary for the local control of the signal only. Maximum contact equipment is shown merely as a matter of information.

If pole changing contacts or extra drag contacts are required, same must be specified. State the position of the signal blade at which each extra contact is to make and break, considering the stop position as 0 degree.

For Semaphore Oil and Oiling diagrams see Part 21 of this Section.

Drawing references are shown for convenience in checking shipping lists and invoices.

Fig. No.	Name	Drawing Reference
	Order by plate, figure number and name	
A	Model 2A 8 volt Signal Mechanism Complete, for Two Arm Base of Mast Signals. Specify Spectacle to be used and whether Signal is to operate in two or three positions. If lever controlled state whether Dynamic or Battery Indication....	
A1	same as Fig. A, except with Mechanism Case Plate H1601 Fig. A and Shelving Plate H1603 Fig. B	
A2	same as Fig. A, except with Mechanism and Battery Case Plate H1601 Fig. B and Shelving Plate H1603 Fig. B	
B	same as Fig. A, except 10 volt.....	
B1	same as Fig. B, except with Mechanism Case Plate H1601 Fig. A and Shelving Plate H1603 Fig. B,.....	
B2	same as Fig. B, except with Mechanism and Battery Case Plate H1601 Fig. B and Shelving Plate H1603 Fig. B	
C	same as Fig. A, except 20 volt.....	
C1	same as Fig. C, except with Mechanism Case Plate H1601 Fig. A and Shelving Plate H1603 Fig. B	
C2	same as Fig. C, except with Mechanism and Battery Case Plate H1601 Fig. B and Shelving Plate H1603 Fig. B	
D	Frame Complete, includes Bearing, Studs, Bushings, etc. For details see Plate H1201 Fig. B.....	
E	Motor Complete (8 volts.) For details see Plate H1301 Fig. A1.	
F	Motor Complete (10 volts). For details see Plate H1301 Fig. B1.	36000
G	Motor Complete (20 volts). For details see Plate H1301 Fig. C1.	
H	Ratchet Gear Complete. For details see Plate H1203 Fig. A..	30080

GENERAL RAILWAY SIGNAL COMPANY March 1916

Model 2A, Direct-Current, Base-of-Mast

Signal Mechanisms

For Two Arm Signal, 8 volts, 10 volts or 20 volts

Drawing references are shown for convenience in checking shipping lists and invoices.

Fig. No.	Name	Drawing Reference
	Order by plate, figure number and name	
J	Intermediate Gear Complete. For details see Plate H1203 Fig. C	29965
K	Circuit Controller. For details and specifications see Plate H1405	
1	Main Shaft. For details see Plate H1203 Fig. 14	36458
1a	as above, except with two Woodruff Keys Fig. 8 and Pin Fig. 9.	
2	Shaft, for Circuit Controller. For detail see Plate H1405 Fig. 6.	36459
3	Sector. For details see Plate H1203 Fig. 11	29830
4	Crank, for pipe or rod connected Signals. For details see Plate H1203 Fig. 25	36055
5	Sheave Sector, for upper quadrant wire connected Signals. For detail see Plate H1203 Fig. 22	40646
5a	as above, except with Set Screw Fig. 7	
6	Connector Complete, for upper quadrant wire connected Sign ls. For details see Plate H1203 Fig. 23	42019
7	Set Screw, $\frac{1}{4}''$ x $\frac{5}{8}''$, for Sheave Sector Fig. 5	18981
8	Woodruff Key, for Sector Fig. 3, Crank Fig. 4 and Sheave Sector Fig. 5	028
9	Pin, for connecting Shaft Fig. 2 to Main Shaft Fig. 1	42146
10	Frame, left hand, for Circuit Controller	36063
10a	as above, except with two Cap Screws Fig. 12	
11	Frame, right hand, for Circuit Controller	36052
11a	as above, except with two Cap Screws Fig. 12	
12	Cap Screw, $\frac{1}{2}''$ x $1\frac{1}{4}''$ hex. hd., for fastening Circuit Controller Frames Fig. 10 and Fig. 11 to Bracket	5255
13	Roller Bearing Complete, for Intermediate Gear Fig. J. For details see Plate H1203 Fig. 13	29998
14	Clamp, for holding Motor to Frame. For detail see Plate H1203 Fig. 27	36061
14a	as above, except with Tap Bolt and Lock Washer. (1-14, 1-16, 1-17)	

March 1916 GENERAL RAILWAY SIGNAL COMPANY

Model 2A, Direct-Current, Base-of-Mast

Signal Mechanisms

For Two Arm Signal, 8 volts, 10 volts or 20 volts

Drawing references are shown for convenience in checking shipping lists and invoices.

Fig. No.	Name	Drawing Reference
	Order by plate, figure number and name	
15	Clamp, for holding Motors to Frame. For detail see Plate H1203 Fig. 26	36060
15a	as above, except with Tap Bolt and Lock Washer. (1-15, 1-16, 1-17)	
16	Tap Bolt, $\frac{3}{8}''$ x $1\frac{3}{4}''$ hex. hd., slotted, for holding Clamps Fig. 14 and Fig. 15	36062
16a	as above, except with Lock Washer Fig. 17	
17	Lock Washer, for Bolt Fig. 16	0569

Memoranda

Section H, Part 12

Supersedes Section H, Part 6
Dated November 1913

Model 2A, Base-of-Mast Signal Mechanism Details

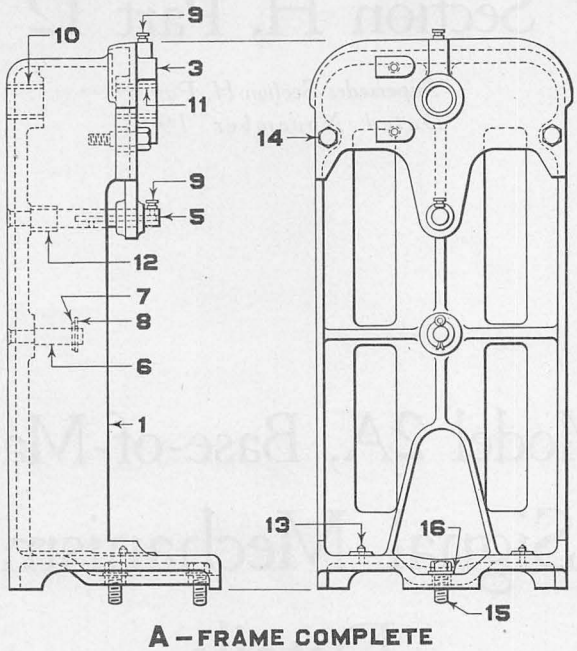

A – FRAME COMPLETE

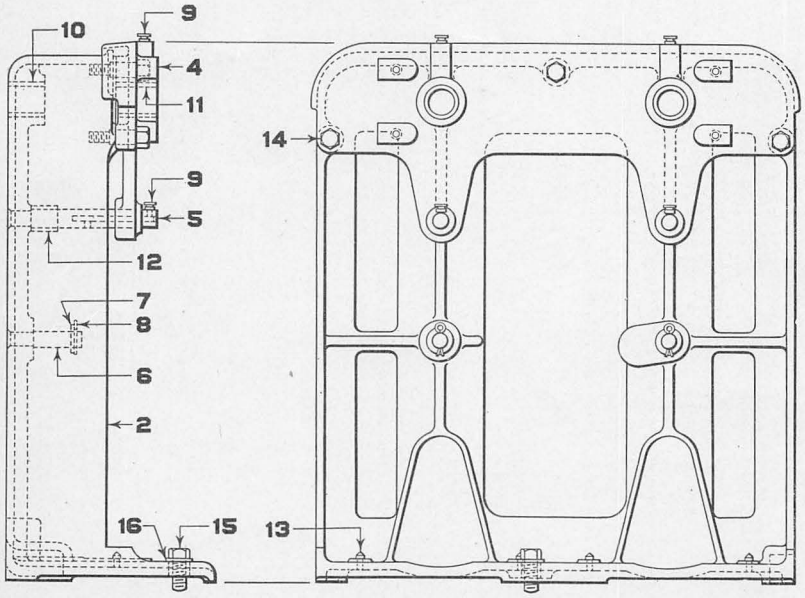

B – FRAME COMPLETE

Base-of-Mast Signal Mechanism—Details

March 1916 GENERAL RAILWAY SIGNAL COMPANY

Model 2A, Base-of-Mast

Signal Mechanism Details

Drawing references are shown for convenience in checking shipping lists and invoices.

Fig. No.	Name	Drawing Reference
	Order by plate, figure number and name	
A	Frame Complete as shown, for One Arm Base of Mast Signal Mechanism. (1-1a, 1-3a)	
B	Frame Complete as shown, for Two Arm Base of Mast Signal Mechanism. (1-2a, 1-4a)	
1	Frame, for Fig. A, with Studs, Bushing and Dowel Pins. (1-Frame, 1-5, 1-6, 1-10, 2-13)	
1a	as above, except with Washer, Cotter Pin, Spacer, Oil Cup and Tap Bolt. (1-1, 1-7, 1-8, 1-9, 1-12, 2-15)	
2	Frame, for Fig. B, with Studs, Bushing and Dowel Pins. (1-Frame, 2-5, 2-6, 2-10, 4-13)	
2a	as above, except with Washers, Cotter Pins, Spacers, Oil Cup and Tap Bolts. (1-2, 2-7, 2-8, 2-9, 2-12, 1-15)	
3	Bearing Bracket, for Fig. A, with Bushing Fig. 11	
3a	as above, except with Oil Cup and Dowel Screws. (1-3, 1-9, 2-14)	
4	Bearing Bracket, for Fig. B, with two Bushings Fig. 11	
4a	as above, except with Oil Cups and Dowel Screws. (1-4, 2-9, 3-14)	
5	Stud, $\frac{7}{8}''$, for Ratchet Gear	36053
5a	as above, except with Oil Cup Fig. 9	
6	Stud, $\frac{3}{4}''$, for Intermediate Gear	36054
6a	as above, except with Washer and Cotter Pin. (1-6, 1-7, 1-8).	
7	Washer, $\frac{3}{4}''$, for Stud Fig. 6	23165
8	Cotter Pin, $\frac{1}{8}''$ x $1''$, for Stud Fig. 6	040
9	Oil Cup, for Stud Fig. 5	32418
10	Bushing, for Frames Fig. 1 and Fig. 2	22135
11	Bushing, for Bearing Brackets Fig. 3 and Fig. 4	22136
12	Spacer, for Ratchet Gear	36059
13	Dowel Pin, for fastening Motor to Frame	36056
14	Dowel Screw, $\frac{5}{8}''$ x $2\frac{1}{4}''$ hex. hd., for fastening Bearing Bracket Fig. 3 and Fig. 4 to Frames Fig. 1 and Fig. 2	36057

GENERAL RAILWAY SIGNAL COMPANY March 1916

Model 2A, Base-of-Mast

Signal Mechanism Details

Drawing references are shown for convenience in checking shipping lists and invoices.

Fig. No.	Name	Drawing Reference
	Order by plate, figure number and name	
15	Tap Bolt, $\frac{5}{8}''$ x $1\frac{1}{2}''$ hex. hd., for fastening Frame Fig. 1 and Fig. 2 to Mechanism Case	0503
15a	as above, except with Washer Fig. 16	
16	Washer, for Tap Bolt Fig. 15	087

Memoranda

PLATE H1203

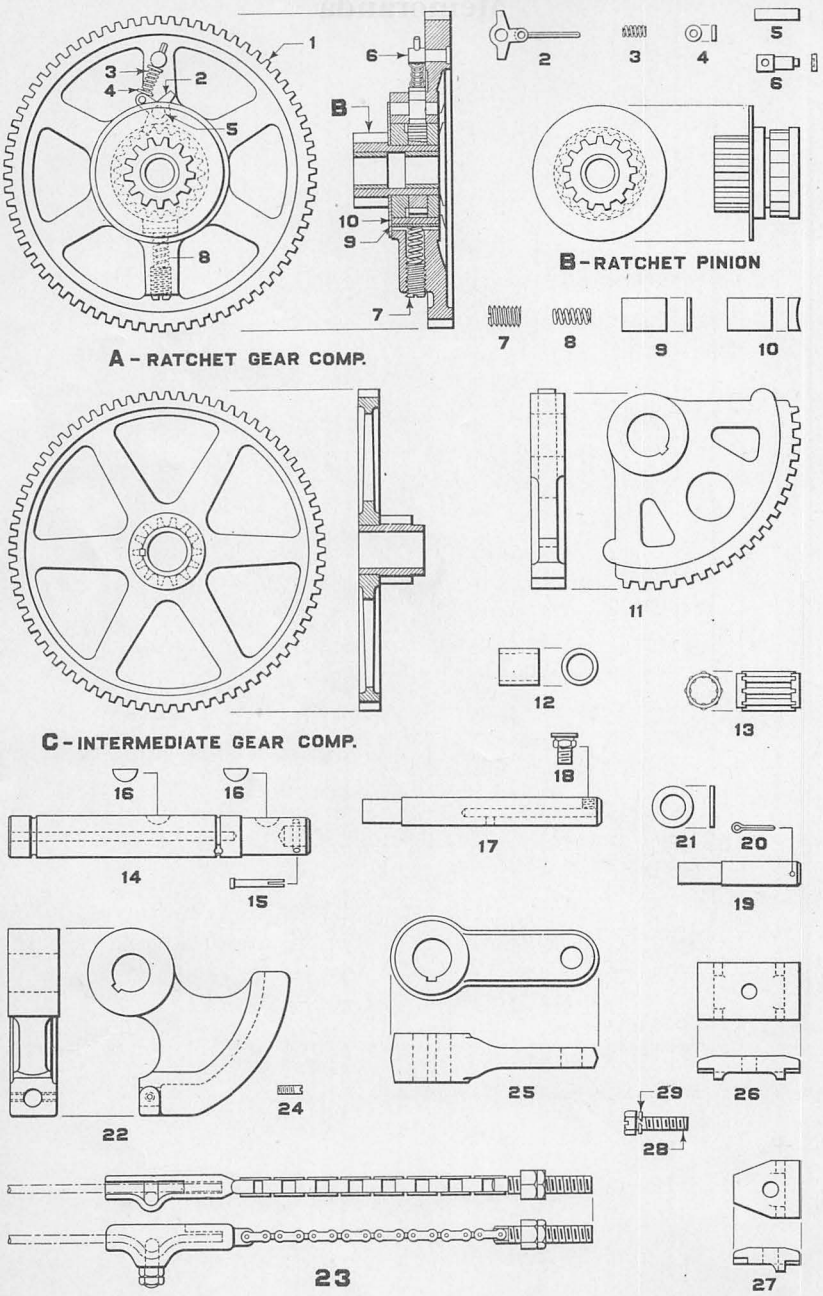

Base-of-Mast Signal Mechanism—Details

March 1916 GENERAL RAILWAY SIGNAL COMPANY

Model 2A, Base-of-Mast

Signal Mechanism Details

Drawing references are shown for convenience in checking shipping lists and invoices.

Fig. No.	Name	Drawing Reference
	Order by plate, figure number and name	
A	Ratchet Gear Complete as shown. (1-B, 1-1, 1-2, 1-3, 2-4, 1-5, 1-6, 1-7, 1-8, 1-9, 1-10)	30080
B	Ratchet Pinion, for Ratchet Gear Fig. A	30079
C	Intermediate Gear Complete as shown	29965
C1	as above, except with Roller Bearing Fig. 13	
1	Ratchet Gear only, for Fig. A	30081
2	Pawl Complete as shown, for Ratchet Gear Fig. A	42438
3	Spring, for Ratchet Gear Fig. A	30875
4	Washer, $\frac{3}{16}''$, for Spring Fig. 3	15394
5	Pin, $\frac{3}{8}''$ x $1\frac{3}{8}''$, for fastening Pawl Fig. 2 to Gear Fig. 1	30521
6	Stud, with Collar, for Ratchet Gear Fig. A	
7	Set Screw, $\frac{5}{8}''$ x $\frac{1}{2}''$, headless, for Spring Fig. 8	35966
8	Spring, for Brake Shoe Fig. 10	30090
9	Backing Plate, for Brake Shoe Fig. 10	30085
10	Brake Shoe, for Ratchet Gear Fig. A	30086
11	Sector, for operating Main Shaft Fig. 14	29830
12	Spacer, for Ratchet Gear Fig. A	36059
13	Roller Bearing Complete, for Intermediate Gear Fig. C	29998
14	Main Shaft	36458
14a	as above, except with Woodruff Keys and Pin. (1-14, 1-15, 2-16)	
15	Pin, for connecting Circuit Controller Shaft to Main Shaft Fig. 14	42146
16	Woodruff Key, for fastening Sector Fig. 11, Sheave Sector Fig. 22 and Crank Fig. 25 to Main Shaft Fig. 14	028
17	Stud, $\frac{7}{8}''$ for supporting Ratchet Gear Fig. A	36053
17a	as above, except with Oil Cup Fig. 18	
18	Oil Cup, for Stud Fig. 17	32418
19	Stud, $\frac{3}{4}''$, for supporting Intermediate Gear Fig. C	36054
19a	as above, except with Washer and Cotter Pin. (1-19, 1-20, 1-21)	
20	Cotter Pin, $\frac{1}{8}''$ x $1''$, for Stud Fig. 19	040

GENERAL RAILWAY SIGNAL COMPANY March 1916

Model 2A, Base-of-Mast

Signal Mechanism Details

Drawing references are shown for convenience in checking shipping lists and invoices.

Fig. No.	Name	Drawing Reference
	Order by plate, figure number and name	
21	Washer, $\frac{3}{4}''$, for Stud Fig. 19	23165
22	Sheave Sector, for upper quadrant, wire connected Signals	40646
22a	as above, except with one Set Screw Fig. 24	
22b	same as Fig. 22, except with Set Screw and Chain Connector. (1-22, 1-23, 1-24)	
23	Chain Connector Complete as shown, for connecting to Sheave Sector Fig. 22	42019
24	Set Screw, $\frac{1}{4}''$ x $\frac{5}{8}''$, headless, for Sheave Sector Fig. 22	18981
25	Crank, for pipe connected Signals	36055
26	Clamp, for fastening Motors to Frame, used only with two arm Signal Mechanism	36060
26a	as above, except with Tap Bolt and Lock Washer. (1-26, 1-28, 1-29)	
27	Clamp, for fastening Motor to Frame	36061
27a	as above, except with Tap Bolt and Lock Washer. (1-27, 1-28, 1-29)	
28	Tap Bolt, $\frac{3}{8}''$ x $1\frac{3}{4}''$ hex. hd. slotted, for fastening Clamps Fig. 26 and Fig. 27 to Frame	36062
28a	as above, except with Lock Washer Fig. 29	
29	Lock Washer, $\frac{3}{8}''$, for Bolt Fig. 28	0569

Section H, Part 13

Supersedes Plates H0204 and H0304
Dated June 1911
H0204A, Dated February 1914
H0208 and H0308, Dated July 1912

Model 2A, Direct-Current Signal Motors

PLATE H1301

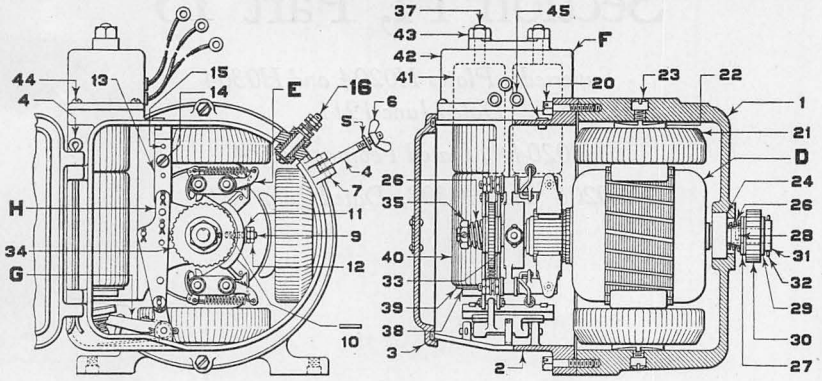

A-MODEL 2A LOW VOLTAGE MOTOR COMPLETE- 8 VOLTS
B-MODEL 2A LOW VOLTAGE MOTOR COMPLETE- 10 VOLTS
C-MODEL 2A LOW VOLTAGE MOTOR COMPLETE-20 VOLTS

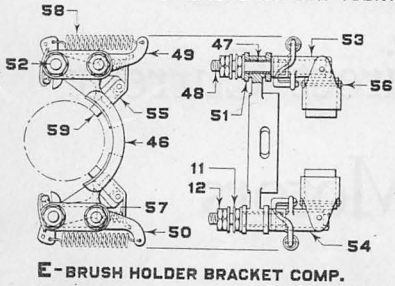

E-BRUSH HOLDER BRACKET COMP.

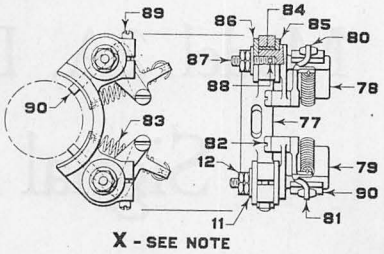

X - SEE NOTE

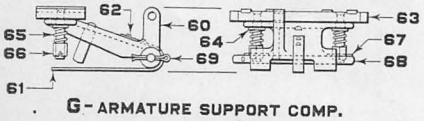

G-ARMATURE SUPPORT COMP.

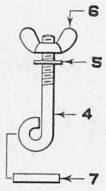

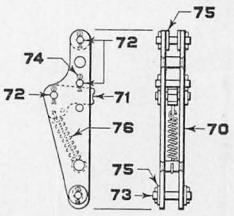

H-LINK COMP.

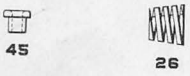

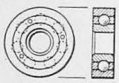

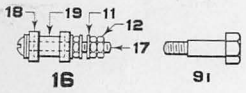

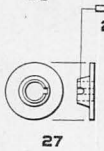

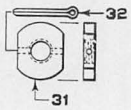

Model 2A Motors—8 volts, 10 volts or 20 volts

March 1916 GENERAL RAILWAY SIGNAL COMPANY

Model 2A, Direct-Current

Motors and Motor Parts

8 volts, 10 volts or 20 volts

NOTE: Brush holder bracket X is shown for repair parts only. When ordering brush holder bracket complete specify Fig. E which is interchangeable.

Drawing references are shown for convenience in checking shipping lists and invoices.

Fig. No.	Name	Drawing Reference
	Order by plate, figure number and name	
A	Motor Complete, (8 volts), for Top of Mast Signal Mechanism. Specify whether Signal is to operate in upper or lower quadrant, right or left hand indication.	39500
A1	as above, except for Base of Mast Signal Mechanism.	
B	Motor Complete, (10 volts), for Top of Mast Signal Mechanism. Specify whether Signal is to operate in upper or lower quadrant, right or left hand indication.	29890
B1	as above, except for Base of Mast Signal Mechanism.	36000
C	Motor Complete, (20 volts), for Top of Mast Signal Mechanism.	30870
C1	as above, except for Base of Mast Signal Mechanism.	
D	Armature Complete, for 8 volt Motor Fig. A.	39501
D1	Armature Complete, for 10 volt Motor Fig. B.	29893
D2	Armature Complete, for 20 volt Motor Fig. C.	30871
E	Brush Holder Bracket Complete as shown. (1-46, 4-47, 2-48a, 1-49, 1-50, 4-51, 2-52, 1-53a, 1-54a, 2-58, 2-59).	37930
F	Magnet Complete, for Retaining Mechanism on 8 volt Motor. Includes Coils, Core, Cap, Nuts, Washers, etc. Specify whether for Top of Mast or Base of Mast Signal Mechanism. (2-37, 1-38, 2-39, 2-40, 2-41, 1-42, 2-43, 3-45).	39058
F1	as above, except with four Screws Fig. 44.	
F2	same as Fig. F, except for 10 volt Motor. (2-37, 1-38, 2-39, 2-40a, 2-41a, 1-42, 2-43, 3-45)	
F3	as above, except with four Screws Fig. 44.	
F4	same as Fig. F, except for 20 volt Motor. (2-37, 1-38, 2-39, 2-40b, 2-41b, 1-42, 2-43, 3-45)	
F5	as above, except with four Screws Fig. 44.	
G	Armature Support Complete as shown. (1-60a, 1-63a, 1-68a).	42357

GENERAL RAILWAY SIGNAL COMPANY March 1916

Model 2A, Direct-Current

Motors and Motor Parts

8 volts, 10 volts or 20 volts

Drawing references are shown for convenience in checking shipping lists and invoices.

Fig. No.	Name	Drawing Reference
	Order by plate, figure number and name	
H	Link Complete as shown, for Retaining Mechanism. Specify whether Signal is to operate in upper or lower quadrant, right or left hand indication. (1-70, 1-71, 3-72, 1-73, 8-74, 4-75, 1-76)	32666
1	Motor Frame only	29825
2	Bearing Bracket, with Stud for Brush Holder Bracket, Hanger Block for Link, Eye Bolt, Wing Nut, Pins, Nuts and Washer. (1–Bearing Bracket, 1-5a, 1-9a, 1-13, 1-14, 2-15)	
2a	as above, except with Cover, Cotter Pin, Binding Post, Bushings and Cap Screws. (1-2, 1-3, 1-4, 1-16, 2-20, 2-45).	
3	Cover, with Gasket	
4	Cotter Pin, $\frac{3}{16}''$ x $6\frac{1}{4}''$, for Cover Fig. 3	35622
5	Eye Bolt only	29963
5a	as above, except with Wing Nut, Washer and Pin. (1-5, 1-6, 1-7, 1-8)	
6	Washer, for Eye Bolt Fig. 5	069
7	Wing Nut, for Eye Bolt Fig. 5	29995
8	Pin, $\frac{3}{16}''$ x $1\frac{1}{8}''$, for fastening Eye Bolt Fig. 5 to Bearing Bracket Fig. 2	7568
9	Stud, $\frac{1}{4}''$ x $1''$, for fastening Brush Holder Fig. E to Bearing Bracket Fig. 2	7359
9a	as above, except with Pin, Nuts and Washer. (1-9, 1-10, 1-11, 2-12)	
10	Pin, $\frac{1}{16}''$ x $\frac{3}{4}''$, for fastening Stud Fig. 9 to Bearing Bracket Fig. 2	13112
11	Washer, for $\frac{1}{4}''$ Screw	1225
12	Nut, hex., for $\frac{1}{4}''$ Screw	7395
13	Hanger Block, for Link Fig. H	32686
14	Screw, $\frac{1}{4}''$ x $\frac{1}{2}''$ flat hd., for fastening Hanger Block Fig. 13 to Bearing Bracket Fig. 2	5263

March 1916 GENERAL RAILWAY SIGNAL COMPANY

Model 2A, Direct-Current

Motors and Motor Parts

8 volts, 10 volts or 20 volts

Drawing references are shown for convenience in checking shipping lists and invoices.

Fig No.	Name	Drawing Reference
	Order by plate, figure number and name	
15	Pin, $\frac{1}{8}''$ x $\frac{1}{2}''$, for fastening Hanger Block Fig. 13 to Bearing Bracket Fig. 2	1240
16	Binding Post Complete, includes Nuts, Washers and Bushings. (5-11, 3-12, 1-17, 2-18, 1-19)	
17	Screw, $\frac{1}{4}''$ x $1\frac{3}{4}''$ rd. hd., for Fig. 16	1411
18	Washer, insulating, for Fig. 16	4001
19	Bushing, insulating, for Fig. 16	7811
20	Cap Screw, $\frac{5}{16}''$ x $1\frac{1}{4}''$ hex. hd., for fastening Bearing Bracket Fig. 2 to Motor Frame Fig. 1	20557
21	Field Coil, for 8 volt Motor. Specify whether for Top of Mast or Base of Mast Signal Mechanism	39502
21a	as above, except for 10 volt Motor	29999
21b	same as Fig. 21, except for 20 volt Motor	30873
22	Pole Piece	29864
23	Screw, $\frac{3}{8}''$ x $1''$ fill. hd., for fastening Pole Piece Fig. 22 to Motor Frame Fig. 1	19866
24	Ball Bearing Complete	47790
25	Shim Washer, used between Ball Bearing Fig. 24, Spring Fig. 26 and Friction Cone Fig. 33	34254
26	Spring, for Friction Cone Fig. 27	30506
27	Friction Cone for Motor Pinion Fig. 27 and Disc Fig. 34	30077
28	Pin, $\frac{1}{8}''$ x $''\frac{9}{16}$, for Friction Cones Fig. 27 and Fig. 33	16448
29	Friction Washer, for Friction Cone Fig. 27 and Disc Fig. 34	30078
30	Motor Pinion	30075
31	Collar, for Pinion end of Shaft	30650
32	Cotter Pin, $\frac{1}{8}''$ x $1\frac{1}{4}''$, for Collar Fig. 31	041
33	Friction Cone, for Commutator end of Shaft	30668
34	Friction Disc, for Retaining Mechanism	32685
35	Nut, $\frac{1}{2}''$ hex., with Screw Fig. 36, for Commutator end of Shaft.	
36	Screw, No. 6 x $\frac{3}{8}''$ rd. hd., for Nut Fig. 35	2552
37	Core, for Pick Up and Holding Coils, for Magnet Complete Fig. F	33206

GENERAL RAILWAY SIGNAL COMPANY March 1916

Model 2A, Direct-Current

Motors and Motor Parts

8 volts, 10 volts or 20 volts

Drawing references are shown for convenience in checking shipping lists and invoices.

Fig. No.	Name	Drawing Reference
	Order by plate, figure number and name	
38	Link, for spacing Cores on Magnet Complete Fig. F	38496
39	Insulating Washer, for Core Fig. 37	8076
40	Pick Up Coils, for Magnet Complete Fig. F, on 8 volt Motor	33253
40a	as above, except for 10 volt Motor	
40b	same as Fig. 40, except for 20 volt Motor	
41	Holding Coils, for Magnet Complete Fig. F, on 8 volt Motor. Specify whether for Top of Mast or Base of Mast Signal Mechanism	33252
41a	as above, except for 10 volt Motor	
41b	same as Fig. 41, except for 20 volt Motor	
42	Cap, for Magnet Complete Fig. F	33204
43	Nut, $\frac{3}{8}''$ hex., for Core Fig. 37	1156
44	Screw, No. 8 x $\frac{1}{2}''$ rd. hd., for fastening Cap Fig. 42 to Bearing Bracket Fig. 2	3827
45	Bushing, for Lead Wires	27369
46	Brush Holder Bracket, for Fig. E	37937
47	Insulating Bushing, for Fig. E	37976
48	Screw, $\frac{1}{4}''$ x $1\frac{1}{2}''$ sq. hd., for fastening Arms Fig. 49 or Fig. 50 to Brush Holder Bracket Fig. 46	16563
48a	as above, except with Nuts and Washers. (3-11, 3-12, 1-48)	
49	Spring Arm, upper, for Fig. E	37932
50	Spring Arm, lower, for Fig. E	37931
51	Insulating Link, for Fig. E	35521
52	Screw, special, for holding Levers Fig. 53 and Fig. 54 to Brush Holder Bracket Fig. 46	37939
53	Lever, upper, for Fig. E	37934
53a	as above, except with Cap, Pin and Spring. (1-53, 1-55, 1-56, 1-57)	
54	Lever, lower, for Fig. E	37933
54a	as above, except with Cap, Pin and Spring. (1-54, 1-55, 1-56, 1-57)	
55	Cap, with Stud, for Brush Fig. 59	

March 1916 GENERAL RAILWAY SIGNAL COMPANY

Model 2A, Direct-Current

Motors and Motor Parts

8 volts, 10 volts or 20 volts

Drawing references are shown for convenience in checking shipping lists and invoices.

Fig. No.	Name	Drawing Reference
	Order by plate, figure number and name	
56	Pin, $\frac{3}{32}''$ x 1″, for fastening Cap Fig. 55 to Levers Fig. 53 and Fig. 54	18094
57	Spring, for Cap Fig. 55	37974
58	Spring, for Levers Fig. 53 and Fig. 54	37936
59	Brush, for Fig. E	37938
60	Armature Support, with Stud, for Fig. G	
60a	as above, except with Spring and Screws. (1-60, 1-61, 2-62)	33249
61	Spring, for Armature Support Fig. 60	33200
62	Screw, No. 6 x $\frac{1}{4}''$ rd. hd., for fastening Spring Fig. 61 to Armature Support Fig. 60	2613
63	Armature, with Studs, for Fig. G	33208
63a	as above, except with Washers, Springs, Nuts and Cotter Pins. (1-63, 2-64, 2-65, 2-66, 2-67)	
64	Washer, for Spring Fig. 65	5046
65	Spring, for Armature Fig. 63	33209
66	Castle Nut, for Spring Fig. 65	33247
67	Cotter Pin, $\frac{1}{16}''$ x $\frac{3}{8}''$, for Castle Nut Fig. 66	0652
68	Shaft, for Armature Support Fig. 60	32758
68a	as above, except with one Cotter Pin Fig. 69	
69	Cotter Pin, $\frac{1}{16}''$ x $\frac{7}{8}''$, for Shaft Fig. 68	30039
70	Link, two sides assembled with Spacers, for Fig. H	32659
71	Dog, with Bushing, for Fig. H	32728
72	Pin, $\frac{3}{16}''$ x $\frac{7}{8}''$, for Fig. H	32689
72a	as above, except with two Cotter Pins Fig. 74	
73	Pin, $\frac{3}{16}''$ x $\frac{15}{16}''$, for fastening Link Fig. H to Support Fig. G	38495
73a	as above, except with two Cotter Pins Fig. 74	
74	Cotter Pin, $\frac{1}{16}''$ x $\frac{3}{8}''$, for Pins Fig. 72 and Fig. 73	0652
75	Washer, for Pins Fig. 72 and Fig. 73	5046
76	Spring, for Dog Fig. 71	33203
77	Brush Holder Bracket	30023
78	Brush Holder, upper	1595

GENERAL RAILWAY SIGNAL COMPANY March 1916

Model 2A, Direct-Current

Motors and Motor Parts

8 volts, 10 volts or 20 volts

Drawing references are shown for convenience in checking shipping lists and invoices.

Fig. No:	Name	Drawing Reference
	Order by plate, figure number and name	
78a	as above, except with Spring Arm, Pivot Screw, Spring, Stud, Nuts and Washers. (1-78, 1-80, 1-82, 1-83, 1-87a, 1-88)..	
79	Brush Holder, lower.....	1596
79a	as above, except with Spring Arm, Pivot Screw, Spring, Stud, Nuts and Washer. (1-79, 1-81, 1-82, 1-83, 1-87a, 1-88)..	
80	Spring Arm, upper.....	1597
81	Spring Arm, lower.....	1598
82	Pivot Screw, for Spring Arms Fig. 80 and Fig. 81.....	1647
83	Spring, for Spring Arms Fig. 80 and Fig. 81.....	37936
84	Insulating Bushing, for Brush Holder Bracket Fig. 77.....	1159
85	Insulating Washer, square hole, for Brush Holder Bracket Fig. 77.....	1158
86	Insulating Washer, round hole, for Brush Holder Bracket Fig. 77.	4001
87	Stud, $\frac{1}{4}''$ x $\frac{3}{4}''$, for Brush Holders Fig. 78 and Fig. 79.....	17749
87a	as above, except with Nuts and Washers. (1-11, 2-12, 1-87).	
88	Pin, $\frac{1}{16}''$ x $\frac{3}{8}''$, for fastening Stud Fig. 87 to Brush Holders Fig. 78 and Fig. 79.....	21193
89	Screw, No. 10 x $\frac{7}{8}''$ fill. hd., for Brush Holder Bracket Fig. 77..	6981
90	Brush, for Brush Holders Fig. 78 and Fig. 79.....	35744
91	Dowel Screw, for fastening Motor to Case.....	30049

Memoranda

GENERAL RAILWAY SIGNAL COMPANY April 1927

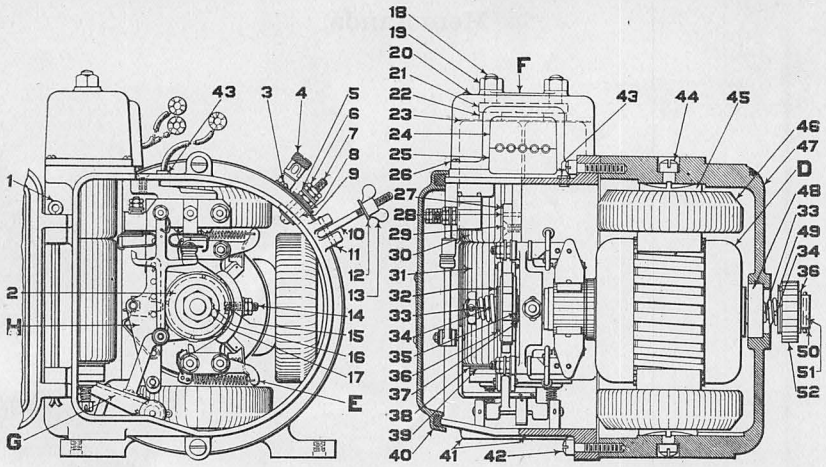

A-MODEL 2A LOW VOLTAGE MOTOR COMPLETE-8-10 VOLTS

B-MODEL 2A LOW VOLTAGE MOTOR COMPLETE-20 VOLTS

C-MODEL 2A MOTOR COMPLETE-110 VOLTS

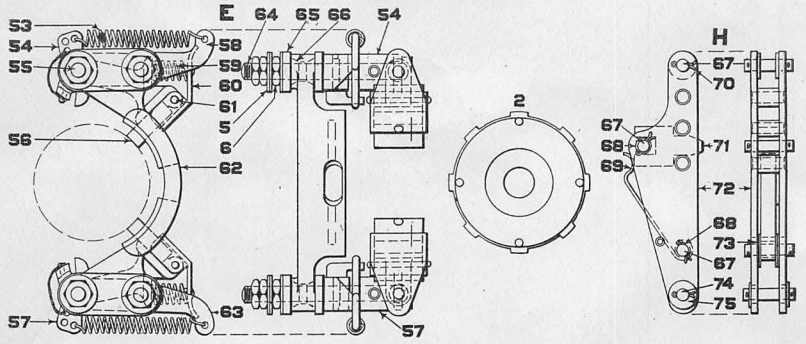

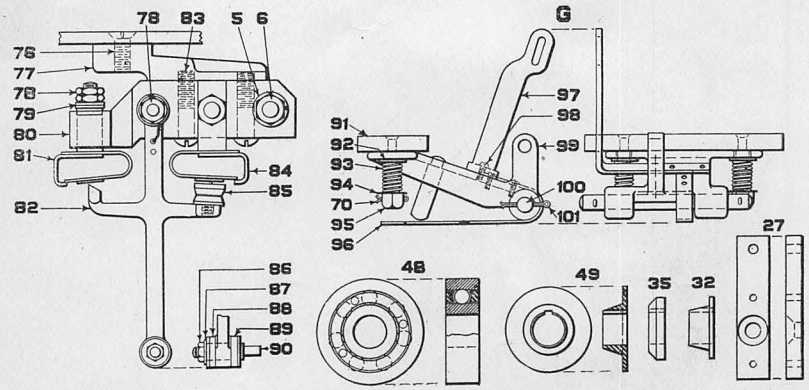

Model 2A Direct-Current Motors

April 1927 GENERAL RAILWAY SIGNAL COMPANY

Model 2A Direct-Current Motors and Motor Parts

8-10 Volts, 20 Volts, 110 Volts

Note: Motors shown on this plate are equipped with contacts as shown which are operated by armature of retaining mechanism.

Cores Fig.18 and Coils Fig. 30, furnished for Magnet complete to retain mechanism are equipped for quick releasing unless otherwise specified. Coils for slow releasing will be furnished when required.

Holding Coils are furnished to operate on same voltage as Motor. Holding Coils can be furnished to operate on other voltages when specified.

Drawing references are shown for convenience in checking shipping lists and invoices.

Fig. No.	Name	Drawing Reference
	Order by plate, figure number and name	
A	Motor Complete, (8-10 volts) Specify whether Signal is to operate in upper or lower quadrant, right or left hand indication.	
B	Motor Complete, (20 volts) Specify whether Signal is to operate in upper or lower quadrant, right or left hand indication	
C	Motor Complete, (110 volts) Specify whether Signal is to operate in upper or lower quadrant, right or left hand indication.	
D	Armature Complete for 8-10 volt Motor Fig. A	29893-1 Gr 1
D1	Armature Complete for 20 volt Motor Fig. B	
D2	Armature Complete for 110 volt Motor Fig. C	34680-1 Gr 1
E	Brush Holder Bracket Complete as shown. (2-53, 1-54, 2-55, 2-56, 1-57, 1-58, 2-59, 2-60, 2-61, 8-5, 8-6, 1-62, 1-63, 2-64, 4-65, 4-66)	37930-1
F	Magnet Complete, for Retaining Mechanism on 8-10 volt Motor Fig. A as shown. Includes Coils, Cores, Cap, Nuts, Washers, etc. (2-18, 2-19, 1-20, 1-21, 2-22, 1-23, 1-24, 1-25, 4-26, 2-30, 2-31, 2-38, 1-39)	49025-2 Gr 3

(Continued on following page)

GENERAL RAILWAY SIGNAL COMPANY April 1927

Model 2A Direct-Current Motors and Motor Parts

8-10 Volts, 20 Volts, or 110 Volts

Drawing references are shown for convenience in checking shipping lists and invoices.

Fig. No.	Name	Drawing Reference
	Order by plate, figure number and name	
F1	Magnet Complete for Retaining Mechanism on 20 volt Motor Fig. B as shown. Includes Coils, Cores, Cap Nuts, Washers, etc. (2-18, 2-19, 1-20, 1-21, 2-22, 1-23, 1-24, 1-25, 4-26, 2-30a, 2-31a, 2-38, 1-39). See Note.....	
F2	Magnet Complete, for Retaining Mechanism on 110 Volt Motor Fig. C as shown. Includes Coils, Cores, Cap, Nuts, Washers, etc. (2-18a, 2-19, 1-20, 1-21, 2-22, 1-23, 1-24, 1-25, 4-26, 2-30b, 2-31b, 2-38, 1-39). See Note....	
G	Armature Support Complete as shown. (1-91, 2-92, 2-93, 2-94, 2-70, 2-95, 1-96, 1-97, 4-98, 1-99, 1-100, 2-101).....	49021 Gr 1
H	Link Complete as shown, for Retaining Mechanism. Specify whether Signal is to operate in upper or lower quadrant, right or left hand indication. (3-67, 2-68, 1-69, 8-70, 1-71, 1-72, 4-73, 1-74, 4-75).....	32666-1
1	Cotter Pin, $\frac{3}{16}$″ x $6\frac{1}{4}$″, for Cover Fig. 40.....	35622
2	Ratchet Complete as shown, for Retaining Mechanism.....	43621
3	Screw, No. 10-32 x $\frac{5}{8}$″ rd. hd. machine, for fastening Oiler Fig. 4 to Frame Fig. 47.....	2784
4	Oiler Complete with Bracket and tube for oiling rear Bearing..	48674-1 Gr 2
5	Washer, brass, used on Terminal Posts and Screws, as shown...	1225
6	Nut, No. 14-24 x $\frac{1}{8}$″ thick hex., for Terminal Posts and Screws, as shown.....	46989
7	Screw, No. 14-24 x $1\frac{3}{4}$″ rd. hd., used as terminal post, as shown.	1411-1
8	Insulating Washer for Screw Fig. 7.....	4001
9	Bushing for Screw Fig. 7.....	7811
10	Eye Bolt, $\frac{1}{4}$″-20 x $2\frac{1}{4}$″ for fastening Motor Cover Fig. 40.....	29963
11	Pin, $\frac{3}{16}$″ x $\frac{1}{8}$″ for Eye Bolt Fig. 10.....	7568
12	Washer for Eye Bolt Fig. 10.....	069

(Continued on following page)

April 1927 GENERAL RAILWAY SIGNAL COMPANY

Model 2A Direct-Current Motors and Motor Parts

8-10 Volts, 20 Volts, or 110 Volts

Drawing references are shown for convenience in checking shipping lists and invoices.

Fig. No.	Name	Drawing Reference
	Order by plate, figure number and name	
13	Wing Nut, $\frac{1}{4}$"-20 for Eye Bolt Fig. 10	29995
14	Stud, $\frac{1}{4}$"-24, for fastening Brush Holder Fig. E to Bearing Bracket Fig. 41	50613
15	Pin, $\frac{1}{16}$" x $\frac{3}{4}$" for Stud Fig. 14	4793-1
16	Screw, No. 6-32 x $\frac{3}{8}$" rd. hd., for Nut Fig. 17	2552
17	Adjusting Nut, $\frac{1}{2}$"-13 x $\frac{1}{4}$", for Armature Shaft	30032
18	Core for Pick Up and Holding Coils for Magnet Complete Fig. D used on 8-10 and 20 volt Motors. See Note	49022
18a	as above, except for 110 volt Motor. See Note	49024
19	Nut, $\frac{3}{8}$"-16 hex., for Core Fig. 18	1156
20	Cap for Magnet Complete Fig. F	33204-1
21	Yoke for Cores Fig. 18, as shown	48844
22	Tube, copper, for Cores Fig. 18	50624
23	Insulator used in Cap Fig. 20, as shown	49836
24	Upper, Insulating Block for Magnet Complete Fig. F, as shown	49834-1
25	Lower Insulating Block for Magnet Complete Fig. F, as shown.	49835-1
26	Screw, No. 8-32 x $1\frac{1}{2}$" rd. hd., for fastening Cap Fig. 20 to Bearing Bracket Fig. 41	2430
27	Hanger Block for Link Complete Fig. H	32686
28	Pin, $\frac{1}{8}$" x $\frac{1}{2}$" for fastening Hanger Block Fig. 27 to Bearing Bracket Fig. 41	1240
29	Screw, No. 14-24 x $\frac{1}{2}$" fl. hd. for fastening Hanger Block Fig. 27 to Bearing Bracket Fig. 41	5263-1
30	Holding Coil for 8-10 volt Motor, as shown. See Note	
30a	as above, except for 20 volt Motor. See Note	
30b	as above, except for 110 volt Motor. See Note	
31	Pickup Coil for 8-10 volt Motor, as shown	
31a	Pickup Coil for 20 volt Motor, as shown	

(Continued on following page)

GENERAL RAILWAY SIGNAL COMPANY April 1927

Model 2A Direct-Current Motors and Motor Parts

8-10 Volts, 20 Volts, or 110 Volts

Drawing references are shown for convenience in checking shipping lists and invoices.

Fig. No.	Name	Drawing Reference
	Order by plate, figure number and name	
31b	Pickup Coil for 110 volt Motor, as shown	
32	Friction Cone for Ratchet Fig. 2, as shown	43658
33	Spring for Friction Cone Figs. 32 and 49	30506
34	Pin, $\frac{1}{8}$″ x $\frac{9}{16}$″, for Friction Cones Figs. 32 and 49	16448
35	Cone for Ratchet Fig. 2, as shown	43656
36	Insulating Washer, $\frac{1}{16}$″, as shown	43655
37	Spacer Washer, .015″ thick, for Armature Shaft, as shown	34254
38	Washer, $\frac{5}{8}$″ x $1\frac{1}{2}$″ x $\frac{1}{16}$″, for Core Fig. 18	17546
39	Link for Cores Fig. 18	38496
40	Cover Complete for Bearing Bracket. Includes Gasket	
41	Bearing Bracket, with Stud for Brush Holder Bracket, Hanger Block for Link, Eye Bolt, Wing Nuts, Pins and Washer. (1-Bearing Bracket, 1-10, 1-11, 1-12, 1-13, 1-14, 1-15, 1-27, 2-28, 1-29, 1-5, 2-6, 1-100, 1-101)	
41a	as above, except with Cover, Cotter Pin, Binding Post, Nuts, Washers, Bushings and Cap Screws. (1-Bearing Bracket, 1-10, 1-11, 1-12, 1-13, 1-14, 1-15, 1-27, 2-28, 1-29, 6-5, 5-6, 1-100, 1-101, 1-41, 1-40, 1-1, 1-7, 6-8, 1-9, 4-42, 1-43)	
42	Cap Screw, $\frac{5}{16}$″-18 x $1\frac{1}{4}$″, for fastening Bearing Bracket Fig. 41 to Frame Fig. 47	50499
43	Insulating Bushing for Lead Wires, as shown	27371
44	Screw, $\frac{3}{8}$″-16 x 1″ fill. hd., for fastening Pole Piece Fig. 45 to Frame Fig. 47	29864
45	Pole Piece, as shown (4 required)	29864
46	Field Coil, as shown, for 8-10 volt motor (4 required)	
46a	as above, except for 20 volt motors	
46b	as above, except for 110 volt Motor	
47	Frame, as shown	29825

(Continued on following page)

April 1927 GENERAL RAILWAY SIGNAL COMPANY

Model 2A Direct-Current Motors and Motor Parts

8-10 Volts, 20 Volts, or 110 Volts

Drawing references are shown for convenience in checking shipping lists and invoices.

Fig. No.	Name	Drawing Reference
	Order by plate, figure number and name	
48	Ball Bearing Complete, as shown (2 required)	47790
49	Friction Cone for Motor Pinion Fig. 52	30077
50	Collar for Armature Shaft, as shown	30650
51	Cotter Pin, $\frac{1}{8}''$ x $1\frac{1}{4}''$ for Collar Fig. 50	041
52	Motor Pinion, as shown	30075
53	Spring for Brush Holder Levers Figs. 54 and 57, as shown	37936
54	Upper Lever, as shown	37934
55	Screw, No. 14, 24 x $2\frac{3}{32}''$ hex., for holding Levers Figs. 54 and 57 to Brush Holder Bracket Fig. 62	37939-1
56	Brush, as shown	37938
57	Lower Lever, as shown	37933
58	Upper Arm, as shown	37938
59	Spring for Cap Fig. 60	37974
60	Cap with Stud for Brush Fig. 56	50808
61	Pin for fastening Cap Fig. 60 to Levers Figs. 54 and 57	18142
62	Brush Holder Bracket for Fig. E	37937-1
63	Lower Arm, as shown	37931
64	Screw, No. 14-24 x $1\frac{1}{2}''$ sq. hd., for fastening Arms Fig. 58 and 63 to Bracket Fig. 62	50874
65	Insulating Link, as shown (4 required)	35521
66	Bushing for Screws Figs. 55 and 64. (4 required)	37976-1
67	Pin, $\frac{3}{16}''$ x $\frac{7}{8}''$, as shown for Fig. H	32689
68	Bushing for Pin Fig. 67, as shown	32729
69	Spring for Dog Fig. 71, as shown	43651
70	Cotter Pin, $\frac{1}{16}''$ x $\frac{3}{8}''$, for Pins Fig. 67 and 74, as shown	0652
71	Dog for Link Complete Fig. H	43650
72	Link, two sides assembled with Spacers for Fig. H	43645
73	Washer for Bushing Fig. 68, as shown	50587

(Continued on following page)

GENERAL RAILWAY SIGNAL COMPANY April 1927

Model 2A Direct-Current Motors and Motor Parts

8-10 Volts, 20 Volts, or 110 Volts

Drawing references are shown for convenience in checking shipping lists and invoices.

Fig. No.	Name	Drawing Reference
	Order by plate, figure number and name	
74	Pin, 3/16" x 15/16" for fastening Link Fig. H to Armature Support Fig. G	38495
75	Washer, 3/8", for Pin Figs. 67 and 74, as shown	42312
76	Screw, No. 14-24 x 5/8" fl. hd., for fastening Bracket for Hold Clear Contacts Fig. 77 to Bearing Bracket Fig. 41	0409
77	Bracket for Hold Clear Contacts Fig. 80, as shown	47208-1
78	Nut, No. 10-32 x 3/16" hex., as shown	577
79	Washer, as shown	3890
80	Insulation Block Complete with Binding Posts, as shown	47201
81	Left Hand Contact Complete, as shown	47203
82	Arm Complete, as shown. Includes (1-85, 1-86, 2-87, 1-88, 1-89, 1-90)	47202
82a	as above, except Arm only	47209
83	Screw, No. 14-24 x 1 1/8" rd. hd. for fastening Insulation Block Fig. 80 to Bracket Fig. 77	0516
84	Right Hand Contact Complete, as shown	43625
85	Contact Complete, as shown	34435
86	Nut, No. 4-36 x 1/4" hex., for Stud Fig. 90, as shown	12680
87	Washer, 1/8", for Stud Fig. 90	13016
88	Insulating Washer for Stud Fig. 90	43639
89	Insulating Bushing for Stud Fig. 90, as shown	43692
90	Stud for Arm, Fig. 82	43640
91	Armature with Studs for Armature Support Fig. G	49020
92	Washer, for Spring Fig. 93	5046
93	Spring for Armature Fig. 91	33209
94	Eyelet for Spring Fig. 93	41858
95	Castle Nut for Spring Fig. 93	33247
96	Spring for Support Fig. 99, as shown	33200

(Continued on following page)

April 1927 GENERAL RAILWAY SIGNAL COMPANY

Model 2A Direct-Current Motors and Motor Parts

8-10 Volts, 20 Volts, or 110 Volts

Drawing references are shown for convenience in checking shipping lists and invoices.

Fig. No.	Name	Drawing Reference
	Order by plate, figure number and name	
97	Lever to operate Contact Arm for Armature Support Complete Fig. 6	43644
98	Screw, No. 6-32 x $\frac{1}{4}$″ rd. hd., for fastening Lever Fig. 97 and Spring Fig. 96 to Support Fig. 99	2613
99	Support. Includes Stud, as shown	
100	Shaft for fastening Armature Support Complete Fig. 6 to Bearing Bracket Fig. 41	32758
101	Cotter Pin $\frac{1}{16}$″ x $\frac{7}{8}$″, for Shaft Fig. 100	30039

Memoranda

Memoranda

GENERAL RAILWAY SIGNAL COMPANY March 1916

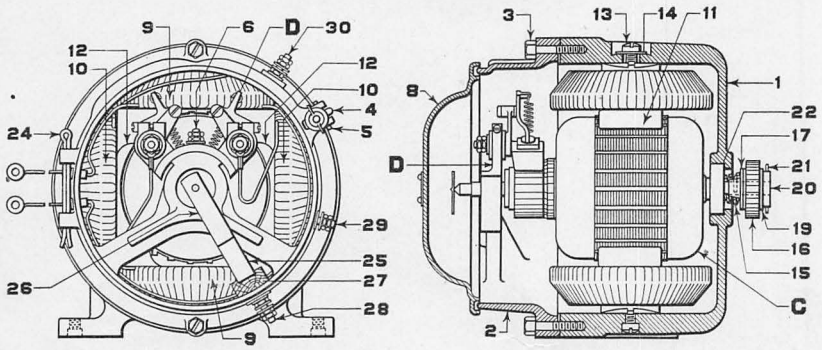

A—MODEL 2A MOTOR COMPLETE—25 VOLTS
B—MODEL 2A MOTOR COMPLETE—110 VOLTS

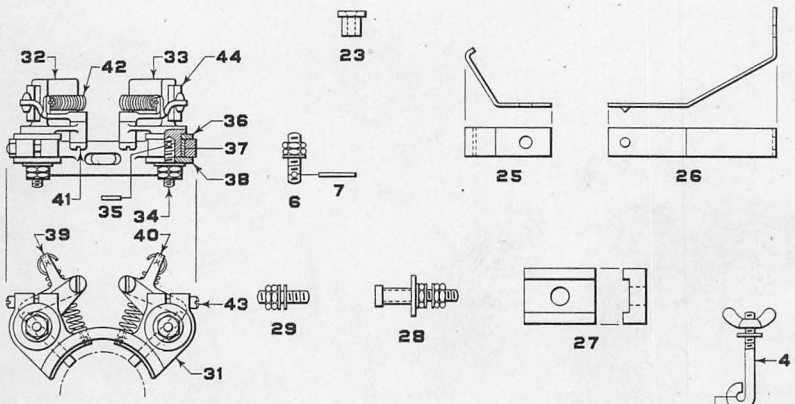

D-BRUSH HOLDER COMP.

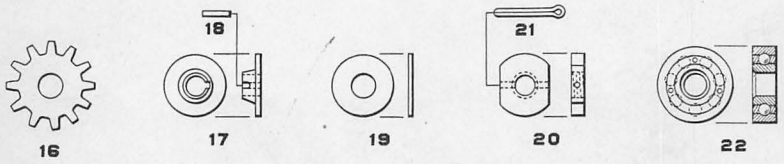

Model 2A Motors—25 volts or 110 volts

March 1916 GENERAL RAILWAY SIGNAL COMPANY

Model 2A, Direct-Current

Motor and Motor Parts

25 volts, 110 volts

Drawing references are shown for convenience in checking shipping lists and invoices.

Fig. No.	Name	Drawing Reference
	Order by plate, figure number and name	
A	Motor Complete as shown. (25 volts)	35830
B	Motor Complete (110 volts)	34605
C	Armature Complete, for 25 volt Motor	35831
C1	Armature Complete, for 110 volt Motor	34680
D	Brush Holder Bracket Complete as shown. (1-31, 1-32a, 1-33a, 2-36, 2-37, 2-38, 2-43, 2-44)	
1	Motor Frame only	29825
2	Bearing Bracket, with Stud for Brush Holder Bracket, Eye Bolt, Wing Nut, Ground Post, Pins, Nuts and Washers. (1-Bracket, 1-4a, 1-6, 1-7, 1-29)	
2a	as above, except with Cover, Binding Post, Bushings, Cap Screws and Cotter Pin. (1-2, 2-3, 1-8, 2-23, 1-24, 1-30)	
3	Cap Screw, $\frac{5}{16}''$ x $1\frac{1}{4}''$ hex. hd., for fastening Bearing Bracket Fig. 2 to Frame Fig. 1	20557
4	Eye Bolt only	29963
4a	as above, except with Wing Nut, Washer and Pin. (1-4, 1-4b, 1-4c, 1-5)	
4b	Washer, for Eye Bolt Fig. 4	069
4c	Wing Nut, for Eye Bolt Fig. 4	29995
5	Pin, $\frac{3}{16}''$ x $\frac{15}{16}''$, for fastening Eye Bolt Fig. 4 to Bearing Bracket Fig. 2	1494
6	Stud Complete, includes Nuts and Washer, for fastening Brush Holder Bracket Fig. D to Bearing Bracket Fig. 2. (1-6b, 2-6c, 1-6d)	
6a	as above, except with Pin Fig. 7. (1-6, 1-7)	
6b	Stud, $\frac{1}{4}''$ x $1''$, for Fig. 6	7359
6c	Nut, $\frac{1}{4}''$ hex., for Stud Fig. 6	7395
6d	Washer, $\frac{1}{4}''$, for Stud Fig. 6	1225
7	Pin, $\frac{1}{16}''$ x $\frac{3}{4}''$, for fastening Stud Fig. 6 to Bearing Bracket Fig. 2	13112
8	Cover, with Rubber Gasket	
9	Field Coil, upper and lower, for 25 volt Motor	35833

GENERAL RAILWAY SIGNAL COMPANY March 1916

Model 2A, Direct-Current

Motor and Motor Parts

25 volts, 110 volts

Drawing references are shown for convenience in checking shipping lists and invoices.

Fig. No.	Name	Drawing Reference
	Order by plate, figure number and name	
9a	Field Coil, upper and lower, for 110 volt Motor	29899
10	Field Coil, right and left, for 25 volt Motor	30873
10a	Field Coil, right and left, for 110 volt Motor	34686
11	Pole Piece, upper and lower	30852
12	Pole Piece, right and left	29864
13	Screw, $\frac{3}{8}''$ x 1″ fill. hd., for fastening Pole Pieces Fig. 11 and Fig. 12 to Frame Fig. 1	19866
14	Washer, for Screw Fig. 13	071
15	Spring, for Friction Cone Fig. 17	30506
16	Motor Pinion	30075
17	Friction Cone, for Motor Pinion Fig. 16	30077
18	Pin, $\frac{1}{8}''$ x $\frac{9}{16}''$, for Friction Cone Fig. 17	16448
19	Friction Washer, for Friction Cone Fig. 17	30078
20	Collar, for Pinion end of Shaft	30650
21	Cotter Pin, $\frac{1}{8}''$ x $1\frac{1}{4}''$, for Collar Fig. 20	041
22	Ball Bearing Complete	47790
23	Bushing, for Lead Wires	27371
24	Cotter Pin, $\frac{1}{4}''$ x $3\frac{3}{4}''$, for Cover Fig. 8	37885
25	Stop, for Contact Fig. 26	34689
26	Contact Spring	34688
27	Insulating Block, for Contact Spring Fig. 26	34690
28	Binding Post Complete as shown, for Insulating Block Fig. 27. (1-28a, 3-28b, 3-28c, 1-28d, 1-28e)	
28a	Screw, $\frac{1}{4}''$ x $1\frac{1}{2}''$, sq. hd., for Binding Post Fig. 28	16563
28b	Nut, $\frac{1}{4}''$ hex., for Binding Posts Fig. 28, Fig. 30 and Ground Post Fig. 29	7395
28c	Washer, $\frac{1}{4}''$, for Binding Posts Fig. 28, Fig. 30 and Ground Post Fig. 29	1225
28d	Insulating Washer, for Binding Posts Fig. 28 and Fig. 30	4001
28e	Insulating Bushing, for Binding Posts Fig. 28 and Fig. 30	34692
29	Ground Post Complete as shown. (2-28b, 2-28c, 1-29a)	
29a	Stud, $\frac{1}{4}''$ x 1″, for Ground Post Fig. 29	7359

March 1916 GENERAL RAILWAY SIGNAL COMPANY

Model 2A, Direct-Current

Motor and Motor Parts

25 volts, 110 volts

Drawing references are shown for convenience in checking shipping lists and invoices.

Fig. No.	Name	Drawing Reference
	Order by plate, figure number and name	
30	Common Binding Post Complete as shown. (3-28b, 5-28c, 2-28d, 1-28e, 1-30a)	
30a	Screw, $\frac{1}{4}''$ x $1\frac{1}{4}''$ rd. hd., for Binding Post Fig. 30	9530
31	Brush Holder Bracket	30023
32	Brush Holder, left hand	1595
32a	as above, except with Spring Arm, Pivot Screw, Spring, Stud, Nuts and Washer. (1-32, 1-34, 1-35, 1-39, 1-41, 1-42)	
33	Brush Holder, right hand	1596
33a	as above, except with Spring Arm, Pivot Screw, Spring, Stud, Nuts and Washers. (1-33, 1-34, 1-35, 1-40, 1-41, 1-42)	
34	Stud Complete, includes Nuts and Washer, for Brush Holders Fig. 32 and Fig. 33. (2-28b, 1-28c, 1-34b)	
34a	as above, except with Pin Fig. 35. (1-34, 1-35)	
34b	Stud, $\frac{1}{4}''$ x $\frac{3}{4}''$, for Fig. 34	17749
35	Pin, $\frac{1}{16}''$ x $\frac{3}{8}''$, for fastening Stud Fig. 34 to Brush Holder Bracket Fig. 31	21193
36	Insulating Washer, square hole, for Brush Holder Bracket Fig. 31	1158
37	Insulating Bushing, for Brush Holder Bracket Fig. 31	1159
38	Insulating Washer, round hole, for Brush Holder Bracket Fig. 31	4001
39	Spring Arm, left hand	1597
40	Spring Arm, right hand	1598
41	Pivot Screw, for Spring Arms Fig. 39 and Fig. 40	1647
42	Spring, for Spring Arms Fig. 39 and Fig. 40	37936
43	Screw, No. 10 x $\frac{7}{8}''$ fill. hd., for Brush Holder Bracket Fig. 31	6981
44	Brush, for Brush Holders Fig. 32 and Fig. 33	1150
45	Dowel Screw, for fastening Motor to Case	30049

Memoranda

Memoranda

PLATE H1307

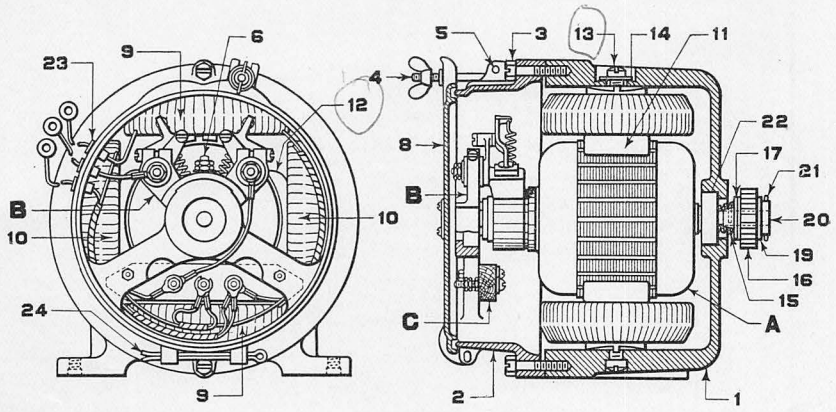

MODEL 2A MOTOR COMPLETE – 110 VOLTS

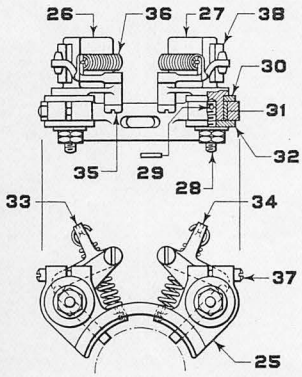

B-BRUSH HOLDER COMP.

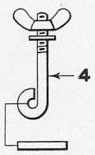

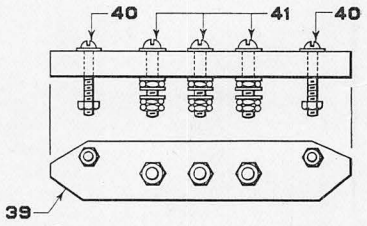

C-INSULATING BLOCK COMP.

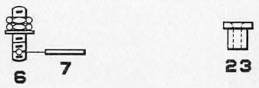

Model 2A Motors—110 volts

March 1916 GENERAL RAILWAY SIGNAL COMPANY

Model 2A, Direct-Current

Motor and Motor Parts

110 volts

NOTE: Motor as illustrated on opposite page is shown for convenience in ordering repair parts only. It is superseded by 110 volt motor shown on Plate H1304 which should be specified when a 110 volt motor complete is required.

Drawing references are shown for convenience in checking shipping lists and invoices.

Fig. No.	Name	Drawing Reference
	Order by plate, figure number and name	
A	Armature Complete, for 110 volt Motor	30851
B	Brush Holder Bracket Complete as shown. (1-25, 1-26a, 1-27a, 2-30, 2-31, 2-32, 2-37, 2-38)	
C	Insulating Block Complete as shown. (1-39, 2-40, 3-41)	
1	Motor Frame only	29825
2	Bearing Bracket, with Stud for Brush Holder Bracket, Eye Bolt, Wing Nut, Pins, Nuts and Washers. (1-Bracket, 1-4a, 1-6, 1-7)	
2a	as above, except with Cover, Bushings, Cap Screws and Cotter Pin. (1-2, 2-3, 1-8, 3-23, 1-24)	
3	Cap Screw, $\frac{5}{16}''$ x $1\frac{1}{4}''$, hex. hd., for fastening Bearing Bracket Fig. 2 to Frame Fig. 1	20557
4	Eye Bolt only	29963
4a	as above, except with Wing Nut, Washer and Pin. (1-4, 1-4b, 1-4c, 1-5)	
4b	Washer, for Eye Bolt Fig. 4	069
4c	Wing Nut, for Eye Bolt Fig. 4	29995
5	Pin, $\frac{3}{16}''$ x $1\frac{1}{8}''$, for fastening Eye Bolt Fig. 4 to Bearing Bracket Fig. 2	7568
6	Stud Complete, includes Nuts and Washer, for fastening Brush Holder Bracket Fig. B to Bearing Bracket Fig. 2. (1-6b, 2-6c, 1-6d)	
6a	as above, except with Pin Fig. 7. (1-6, 1-7)	
6b	Stud, $\frac{1}{4}''$ x 1″, for Fig. 6	7359
6c	Nut, $\frac{1}{4}''$ hex., for Studs Fig. 6 and Fig. 28	7395
6d	Washer, $\frac{1}{4}''$, for Studs Fig. 6 and Fig. 28	1225
7	Pin, $\frac{1}{16}''$ x $\frac{3}{4}''$, for fastening Stud Fig. 6 to Bearing Bracket Fig. 2	13112
8	Cover, with Gasket	

GENERAL RAILWAY SIGNAL COMPANY March 1916

Model 2A, Direct-Current

Motor and Motor Parts

110 volts

Drawing references are shown for convenience in checking shipping lists and invoices.

Fig. No.	Name	Drawing Reference
	Order by plate, figure number and name	
9	Field Coil, upper and lower	29899
10	Field Coil, right and left	29898
11	Pole Piece, upper and lower	30852
12	Pole Piece, right and left	29864
13	Screw, $\frac{3}{8}''$ x 1″ fill. hd., for fastening Pole Pieces Fig. 11 and Fig. 12 to Frame Fig. 1	19866
14	Washer, for Screw Fig. 13	071
15	Spring, for Friction Cone Fig. 17	30506
16	Motor Pinion	30075
17	Friction Cone, for Motor Pinion Fig. 16	30077
18	Pin, $\frac{1}{8}''$ x $\frac{9}{16}''$, for Friction Cone Fig. 17	16448
19	Friction Washer, for Friction Cone Fig. 17	30078
20	Collar, for Pinion end of Shaft	30650
21	Cotter Pin, $\frac{1}{8}''$ x $1\frac{1}{4}''$, for Collar Fig. 20	041
22	Ball Bearing Complete	47790
23	Bushing, for Lead Wires	27371
24	Cotter Pin, $\frac{1}{4}''$ x $3\frac{3}{4}''$, for Cover Fig. 8	37885
25	Brush Holder Bracket	30023
26	Brush Holder, left hand	1595
26a	as above, except with Spring Arm, Pivot Screw, Spring, Stud, Nuts and Washer. (1-26, 1-28, 1-29, 1-33, 1-35, 1-36)	
27	Brush Holder, right hand	1596
27a	as above, except with Spring Arm, Pivot Screw, Spring, Stud, Nuts and Washers. (1-27, 1-28, 1-29, 1-34, 1-35, 1-36)	
28	Stud Complete, includes Nuts and Washer, for Brush Holders Fig. 26 and Fig. 27. (2-6c, 1-6d, 1-28b)	
28a	as above, except with Pin Fig. 29. (1-28, 1-29)	
28b	Stud, $\frac{1}{4}''$ x $\frac{3}{4}''$, for Fig. 28	17749
29	Pin, $\frac{1}{16}''$ x $\frac{3}{8}''$, for fastening Stud Fig. 28 to Brush Holder Bracket Fig. 25	21193
30	Insulating Washer, square hole, for Brush Holder Bracket Fig. 25	1158

March 1916 GENERAL RAILWAY SIGNAL COMPANY

Model 2A, Direct-Current

Motor and Motor Parts

110 volts

Drawing references are shown for convenience in checking shipping lists and invoices.

Fig. No.	Name	Drawing Reference
	Order by plate, figure number and name	
31	Insulating Bushing, for Brush Holder Bracket Fig. 25	1159
32	Insulating Washer, round hole, for Brush Holder Bracket Fig. 25	4001
33	Spring Arm, left hand	1597
34	Spring Arm, right hand	1598
35	Pivot Screw, for Spring Arms Fig. 33 and Fig. 34	1647
36	Spring, for Spring Arms Fig. 33 and Fig. 34	37936
37	Screw, No. 10 x $\frac{7}{8}$″ fill. hd., for Brush Holder Bracket Fig. 25	6981
38	Brush, for Brush Holders Fig. 26 and Fig. 27	1150
39	Insulating Block, for Fig. C	32723
40	Screw Complete, includes Nut and Washer, for fastening Insulating Block Fig. 39 to Bearing Bracket Fig. 2. (1-40a, 1-40b, 1-40c)	
40a	Screw, No. 10 x $1\frac{1}{4}$″ rd. hd., for Fig. 40	4591
40b	Nut, No. 10 hex., for Screw Fig. 40	577
40c	Washer, for Screw Fig. 40	5046
41	Binding Post Complete, includes Screw, Nuts and Washers, for Insulating Block Fig. C. (1-41a, 3-41b, 3-41c)	
41a	Screw, $\frac{1}{4}$″ x $1\frac{1}{4}$″ rd. hd., for Binding Post Fig. 41	9530
41b	Nut, $\frac{1}{4}$″ hex., for Binding Post Fig. 41	7395
41c	Washer, $\frac{1}{4}$″, for Binding Post Fig. 41	1225
42	Dowel Screw, for fastening Motor to Case	30049

Memoranda

Section H, Part 14

Supersedes Plates H0203 and H0303 Dated June 1911
H0207 and H0307 Dated July 1912
H0603 Dated November 1913

Mod.2A Signal Circuit Control. 14

Model 2A Signal Circuit Controllers

PLATE H1401

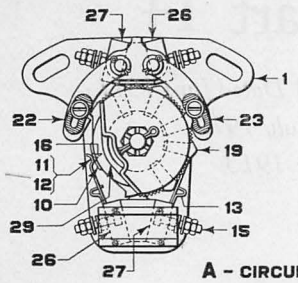

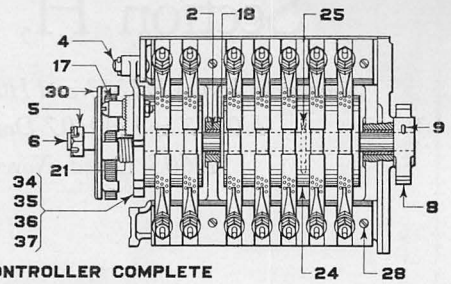

A - CIRCUIT CONTROLLER COMPLETE

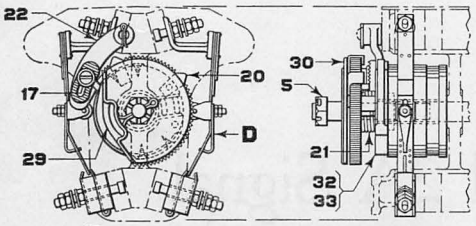

B - SNAP POLE CHANGER COMP.
C - SNAP CIRCUIT CONTROLLER COMP.

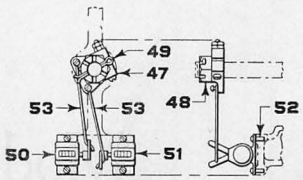

E - COUNTER COMP.

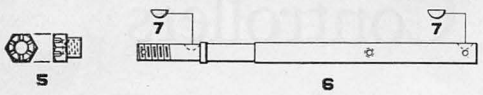

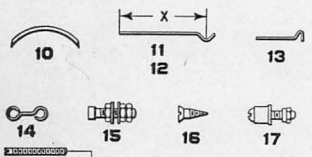

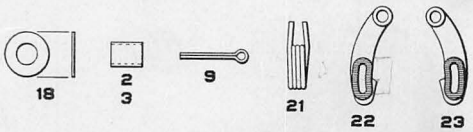

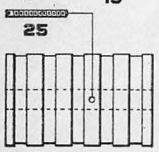

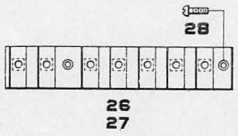

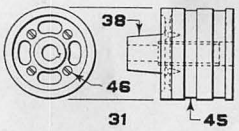

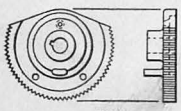

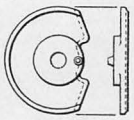

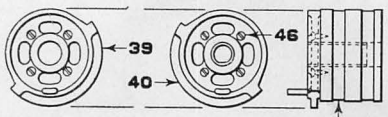

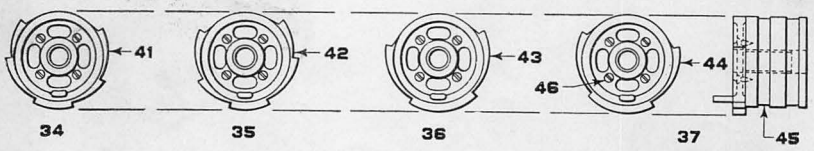

Model 2A Circuit Controller for Top-of-Mast Signals

March 1916 GENERAL RAILWAY SIGNAL COMPANY

Model 2A

Circuit Controller and Parts

For Top-of-Mast Signal Mechanism

Maximum contact equipment is shown merely as a matter of information.

For relay type contacts and other parts of circuit controller see Plate H1407.

SPECIFICATIONS FOR CIRCUIT CONTROLLER:

1. Specify whether signal is two or three position.
2. Specify whether signal operates in upper or lower quadrant, right or left hand indication.
3. Specify degrees of travel of arm.
4. Specify whether or not pole-changing contacts are required. If required, state position of signal arm at which polarity is to be changed.
5. Specify number of extra contacts.
6. Specify position of signal arm at which each extra contact is to make and break.

Extra contacts are all contacts other than those required for the local control of the signal mechanism in question.

Combinations of contacts are as follows:—

10 drag contacts and 0 snap contacts.
10 drag contacts and 4 snap contacts.
14 drag contacts and 0 snap contacts.

NOTE: When 14 drag contacts are required, circuit controller is equipped with extra commutator Fig. 31.

Drawing references are shown for convenience in checking shipping lists and invoices.

Fig. No.	Name	Drawing Reference
	Order by plate, figure number and name	
A	Circuit Controller Complete. See specifications above	
B	Snap Pole Changer Complete. See specifications above.....	
C	Snap Circuit Controller Complete. Equipped with regular Contacts in place of Pole Changer Contacts Fig. D. See specifications above	
D	Pole Changer Contact Complete. For details see Plate H1407 Fig. B.....	

GENERAL RAILWAY SIGNAL COMPANY March 1916

Model 2A

Circuit Controller and Parts

For Top-of-Mast Signal Mechanism

Drawing references are shown for convenience in checking shipping lists and invoices.

Fig. No.	Name	Drawing Reference
	Order by plate, figure number and name	
E	Counter Complete as shown, for three position Signals. (1-47, 1-48, 1-49, 1-50, 1-51, 4-52, 2-53)	
E1	as above, except without Castle Nut Fig. 48 and Cotter Pin Fig. 49. (1-47, 1-50, 1-51, 4-52, 2-53)	38408
E2	Counter Complete, for two position Signals. (1-47, 1-48, 1-49, 1-51, 2-52, 1-53)	
E3	as above, except without Castle Nut Fig. 48 and Cotter Pin Fig. 49. (1-47, 1-51, 2-52, 1-53)	38409
1	Frame, with Bushings, Stud and Cotter Pin. (1-Frame, 1-2, 1-3, 1-4)	
2	Bushing, for Snap Commutator end of Frame Fig. 1	34663
3	Bushing, for Sector end of Frame Fig. 1	29850
4	Stud, for fastening Latch Arms Fig. 22 and Fig. 23 to Frame Fig. 1	34657
5	Castle Nut, for Shaft Fig. 6	34659
6	Shaft	34647
6a	as above, except with two Woodruff Keys Fig. 7 and one $\frac{1}{8}''$ x $1\frac{1}{4}''$ Cotter Pin	
7	Woodruff Key, for fastening Sector Fig. 8 and Trip Plate Fig. 29 to Shaft Fig. 6	027
8	Sector, for operating Circuit Breaker	34646
9	Cotter Pin, $\frac{3}{16}''$ x $1\frac{3}{4}''$, for fastening Sector Fig. 8 to Shaft Fig. 6.	045
10	Contact. State the positions of Signal Arm at which Contact is to make and break	
11	Contact Spring, dimension X = $2\frac{5}{8}''$	29966
12	Contact Spring, dimension X = $2\frac{3}{4}''$	30829
13	Adjuster, for Contact Springs Fig. 11 and Fig. 12	29967
14	Connector, for Binding Posts	35377
15	Binding Post, with Nuts and Washers. (1-15a, 3-15b, 2-15c)	
15a	Screw, $\frac{1}{4}''$ x $1\frac{1}{4}''$, sq. hd., for Binding Post Fig. 15	21713
15b	Nut, $\frac{1}{4}''$ hex., for Binding Post Fig. 15	20098

March 1916 GENERAL RAILWAY SIGNAL COMPANY

Model 2A

Circuit Controller and Parts

For Top-of-Mast Signal Mechanism

Drawing references are shown for convenience in checking shipping lists and invoices.

Fig. No.	Name	Drawing Reference
	Order by plate, figure number and name	
15c	Washer, $\frac{1}{4}''$, for Binding Post Fig. 15	1225
16	Wood Screw, No. 6 x $\frac{1}{2}''$ flat head, for fastening Contacts to Commutator	30127
17	Knob, with Screw and Nuts, for Latch Arms Fig. 22 and Fig. 23. (1-17a, 1-17b, 1-17c, 1-17d)	
17a	Knob only, for Fig. 17	29969
17b	Screw, $\frac{1}{4}''$ x $1\frac{3}{8}''$ rd. hd., for Knob Fig. 17	18744
17c	Nut, $\frac{1}{4}''$ hex., for Screw Fig. 17b	7395
17d	Nut, $\frac{1}{4}''$ sq., for Screw Fig. 17b	37884
18	Washer, used between Commutator and Frame	35133
19	Trip Finger, for tripping Latch Arms Fig. 22 and Fig. 23	34655
20	Trip Finger, with Stud, for tripping Latch Arms Fig. 22 and Fig. 23, used on Snap Pole Changer for positive return of Snap Circuit Controller	39937
21	Spring, for snapping Commutator	40137
22	Latch Arm, left hand	34654
23	Latch Arm, right hand	34653
24	Drag Commutator, five way	29972
25	Set Screw, No. 10 x $1\frac{15}{16}''$ headless, for fastening Drag Commutator Fig. 24 to Shaft Fig. 1	42147
26	Contact Block, right hand upper and left hand lower	43274
27	Contact Block, left hand upper and right hand lower	43273
28	Screw, No. 10 x $\frac{5}{8}''$ rd. hd., for fastening Contact Blocks Fig. 26 and Fig. 27 to Frame Fig. 1	2829
29	Trip Plate, for Trip Fingers Fig. 19 and Fig. 20	34650
30	Lock Plate, for Trip Fingers Fig. 19 and Fig. 20	34651
31	Drag Commutator, with Retainer Plate, Bushing and Screws. Used when Circuit Controller is equipped with fourteen Drag Contacts. (1-38, 1-45, 4-46)	

GENERAL RAILWAY SIGNAL COMPANY March 1916

Model 2A

Circuit Controller and Parts

For Top-of-Mast Signal Mechanism

Drawing references are shown for convenience in checking shipping lists and invoices.

Fig. No.	Name	Drawing Reference
	Order by plate, figure number and name	
32	Snap Commutator, for Snap Pole Changer, with Latch Plate, Bushing and Screws, for two or three position, upper quadrant right hand indication and lower quadrant left hand indication. (1-39, 1-45, 4-46)	
33	Snap Commutator, for Snap Pole Changer, with Latch Plate, Bushing and Screws, for two or three position, lower quadrant right hand indication and upper quadrant left hand indication. (1-40, 1-45, 4-46)	
34	Snap Commutator, for Snap Circuit Controller, with Latch Plate, Bushing and Screws, for three position, upper quadrant right hand indication and lower quadrant left hand indication. (1-41, 1-45, 4-46)	
35	Snap Commutator, for Snap Circuit Controller, with Latch Plate, Bushing and Screws, for three position, lower quadrant right hand indication and upper quadrant left hand indication. (1-42, 1-45, 4-46)	
36	Snap Commutator, for Snap Circuit Controller, with Latch Plate, Bushing and Screws, for two position, upper quadrant right hand indication and lower quadrant left hand indication. (1-43, 1-45, 4-46)	
37	Snap Commutator, for Snap Circuit Controller, with Latch Plate, Bushing and Screws, for two position, lower quadrant right hand indication and upper quadrant left hand indication. (1-44, 1-45, 4-46)	
38	Retainer Plate only, for Drag Commutator Fig. 31	40662
39	Latch Plate only, for Snap Commutator Fig. 32	38938
40	Latch Plate only, for Snap Commutator Fig. 33	38939
41	Latch Plate only, for Snap Commutator Fig. 34	34678
42	Latch Plate only, for Snap Commutator Fig. 35	34676
43	Latch Plate only, for Snap Commutator Fig. 36	34679
44	Latch Plate only, for Snap Commutator Fig. 37	34677

March 1916 GENERAL RAILWAY SIGNAL COMPANY

Model 2A

Circuit Controller and Parts

For Top-of-Mast Signal Mechanism

Drawing references are shown for convenience in checking shipping lists and invoices.

Fig. No.	Name	Drawing Reference
	Order by plate, figure number and name	
45	Snap Commutator, with Bushing, for Fig. 31 to Fig. 37 inclusive	
46	Wood Screw, No. 8 x 1½″ flat head, for fastening Latch Plates to Commutator	43669
47	Clamp Arm, with Screws and Nuts, for Counters. (1-47a, 1-47b, 2-47c, 2-47d)	
47a	Clamp Arm only, for Fig. 47	34660
47b	Screw No. 10 x 1¼″ rd. hd., for Clamp Arm Fig. 47	4591
47c	Nut, No. 10 hex., for Screw Fig. 47b	577
47d	Screw, No. 6 x ⅜″ rd. hd., for holding Operating Rod Fig. 53 to Clamp Arm Fig. 47	36392
48	Castle Nut, for Counters	34659
49	Cotter Pin, ⅛″ x 1¼″, for fastening Castle Nut Fig. 48 to Shaft.	041
50	Counter, left hand	20567
51	Counter, right hand	26674
52	Screw, No. 4 x ⅜″ rd. hd., for fastening Counters Fig. 50 and Fig. 51 to Frame Fig. 1	29107
53	Operating Rod, for Counters Fig. 50 and Fig. 51	34666

Memoranda

Memoranda

PLATE H1402

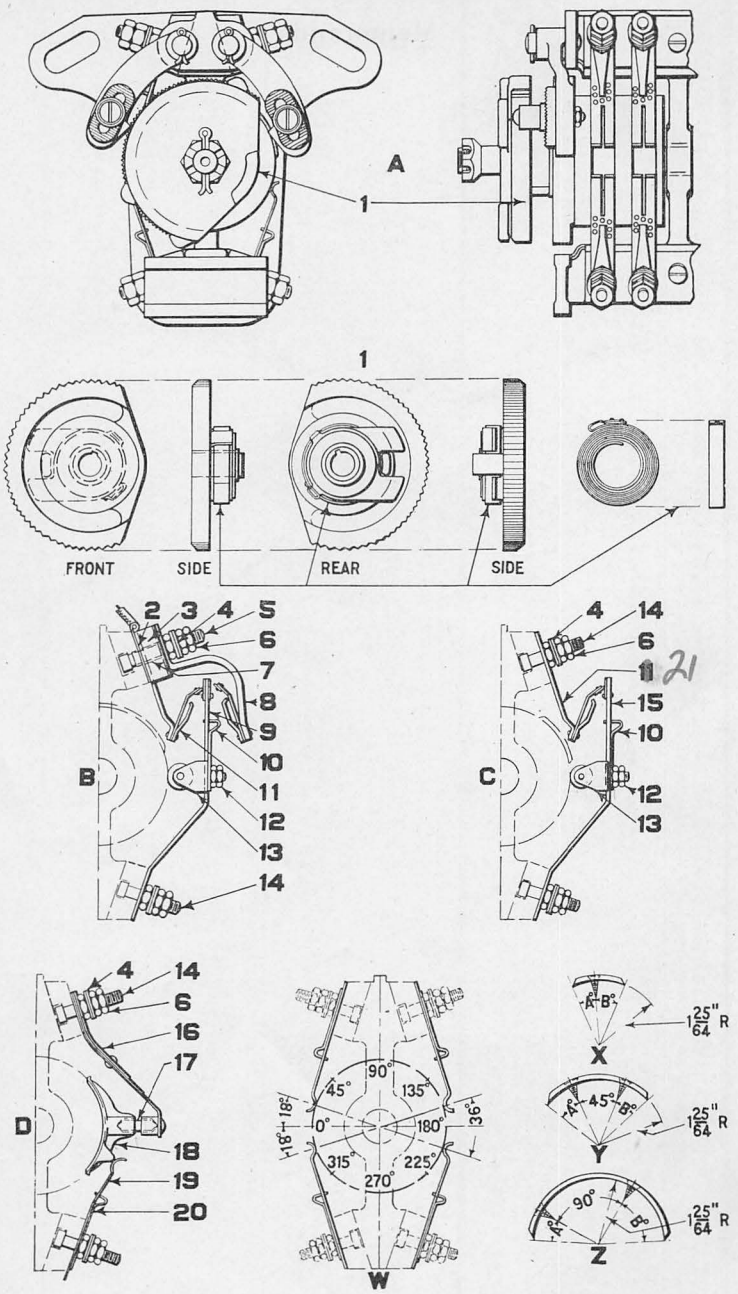

Model 2A Snap Circuit Controllers

April 1927 GENERAL RAILWAY SIGNAL COMPANY

Model 2A Snap Circuit Controller and Contact Groups

For Top of Mast Signal Mechanism

Note: For Circuit Controller detail parts and ordering data see Plate H1401.

Relay Type Contacts shown in Figs. B and C are furnished when required on Model 2A Circuit Controllers.

Slip Contact Fig. D is furnished when specified to meet requirements of special circuits.

Drawing references are shown for convenience in checking shipping lists and invoices.

Fig. No.	Name	Drawing Reference
	Order by plate, figure number and name	
A	Snap Circuit Controller Complete as shown, equipped with Trip Plate Complete Fig. 1, regular Contacts and other parts shown on Plate H1401, as specified	34610
A1	as above, except equipped with two Pole Changer Contacts Complete as shown in Fig. B.	
B	Pole Changer Contact, Relay Type, Complete as shown. Includes (1-2, 1-3, 4-4, 1-5, 6-6, 1-7, 1-8, 1-9A, 1-10, 1-11, 2-12, 1-13, 1-14)	39927-5 Gr 2
C	Operating Contact, Relay Type, Complete as shown. Includes (4-4, 2-14, 6-6, 1-11, 1-15A, 1-10, 2-12, 1-13)	39927-2 Gr 2
D	Slip Contact Complete, as shown (4-4, 2-14, 6-6, 1-16, 1-17, 1-18, 1-19, 1-20)	39927-3
1	Trip Plate Complete, as shown, assembled as a unit including Trip Plate, Plates, Washers and Spring. May be used in place of Trip Plate Fig. 29 and Spring Fig. 21 as shown on Plate H1401	34616 Gr 1
2	Terminal, as shown	38465-1
3	Insulating Block, as shown, for Pole Changer Contact Complete Fig. B.	38470-1
4	Washer, as shown for Terminal Posts Figs. 5 and 14	1225-1
5	Terminal Post, No. 14-24 x $1\frac{3}{4}$" sq. hd., as shown	48609
6	Nut, No. 14-24 hex., for Terminal Posts Figs. 5 and 14, as shown	42839

(Continued on following page)

GENERAL RAILWAY SIGNAL COMPANY April 1927

Model 2A Snap Circuit Controller and Contact Groups

For Top of Mast Signal Mechanism

Drawing references are shown for convenience in checking shipping lists and invoices.

Fig. No.	Name	Drawing Reference
	Order by plate, figure number and name	
7	Insulating Bushing for Screw Fig. 5, as shown	38471-1
8	Contact Arm, front contact, as shown for Pole Changer Contact Complete Fig. B	35466-3 Gr 1
9	Contact Arm Complete, as shown. Includes Arm, Adjuster, Nuts and Roller Complete. (1-9a, 1-10, 2-12, 1-13)	35321-2 Gr 1
9a	Contact Arm only. Same as above, except without Adjuster, Nuts and Roller	35330-2
10	Adjuster as shown	29967-1
11	Contact Arm, back Contact, as shown	35466-2 Gr 1
12	Nut, No. 8-32 hex., as shown for Roller Complete Fig. 13	9188
13	Roller Complete. Includes Holder, Pin, Stud and Roller	
14	Terminal Post, No. 14-24 x $1\frac{1}{4}''$ sq. hd., as shown	48565
15	Contact Arm Complete. Includes Arm, Adjuster, Nuts and Roller Complete. (1-15a, 1-10, 2-12, 1-13)	35321-2
15a	Contact Arm only. Same as above except without Adjuster Nuts and Roller	35330-2
16	Spring Complete, as shown for Slip Contact Fig. D	35171
17	Pin for Spring Complete Fig. 16 as shown	35178
18	Contact, as shown	35172
19	Contact Spring, as shown	30829
20	Adjuster for Contact Spring Fig. 19, as shown	29967

(Continued on following page)

21- Contact Arm for use with Contact Complete - Fig. C

Note: Sixteen Segments are listed in table below for regular and pole changer contacts from which a segment may be selected to open or close circuit at any desired degree of blade travel, making use of screw holes placed in circuit controller drum at factory and the adjustment of springs.

The table shows a number of uses for segments listed by giving the number of degrees where contacts open or close.

Other combinations not shown can be secured from these segments by the use of Fig. W.

Fig. W illustrates a section of circuit controller drum indicating position of contact springs in middle of their adjustment and showing relative location of screw holes in drum for locating contact segment, drum being shown in stop position of signal.

Thickness of Segment 3/32" for Regular Contacts			Going to Clear		Going to Danger		
Figure	Dimension A	Dimension B	Closes	Opens	Closes	Opens	Dwg. No.
X1	12° 30′	42° 30′	55°			55°	29990
	12° 30′	42° 30′	70°			70°	
X2	7°	36°					29990–5
X3	25°	40°					29990–6
X4	22° 30′	22° 30′		2°	2°		29990–7
X5	12° 30′	37° 30′	125°			125°	29990–9
X6	18°	48°	110°			110°	29990–12
	18°	48°	90°			95°	
X7	27° 30′	25°	85°			85°	29990–13
	27° 30′	25°		5°	5°		
X8	15°	23°					29990–14
Y1	28°	35°					29990–1
Y2	25°	20°		43°	43°		29990–2
	25°	20°		45°	45°		
	25°	20°	47°			47°	
Y3	33°	40°		26°	26°		29990–3

(Continued on following page)

Thickness of Segment 3/32" for Regular Contacts			Going to Clear		Going to Danger		
Figure	Dimension A	Dimension B	Closes	Opens	Closes	Opens	Dwg. No.
	33°	40°		57°	57°		
	33°	40°	25°			25°	
Y4	33°	50°		73°	73°		29990–4
Y5	27° 30′	27° 30′		47°	47°		29990–8
	27° 30′	27° 30′		50°	50°		
	27° 30′	27° 30′	40°			40°	
	27° 30′	27° 30′	42°			42°	
Y6	11°	37° 30′					29990–11
Z1	18°	57° 30′		87°	87°		29990–10
Z2	30°	50°					29990–19

Thickness of Segment 1/8" for Relay Type Contacts			Going to Clear		Going to Danger		
X 9	12° 30′	37° 30′					29990–15
X10	12° 30′	42° 30′					29990–16
X11	18°	48°					29990–17
Y7	10°	40°					29990–18

Memoranda

PLATE H1403

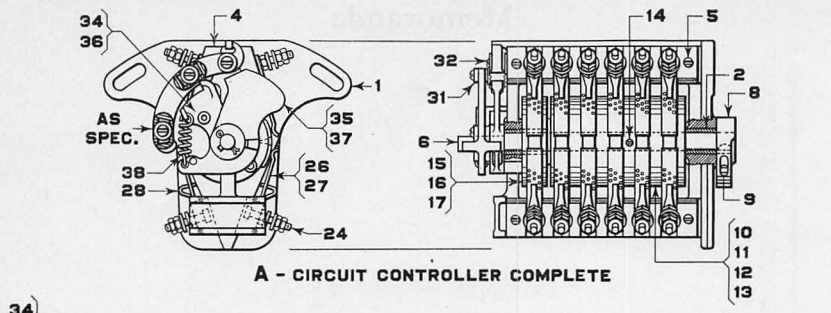

A - CIRCUIT CONTROLLER COMPLETE

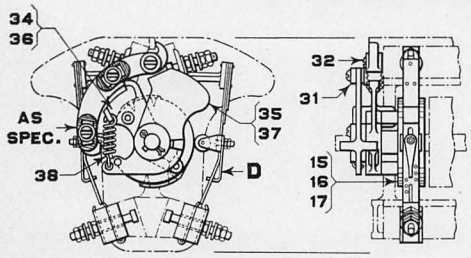

B - SNAP POLE CHANGER COMP.
C - SNAP CIRCUIT CONTROLLER COMP.

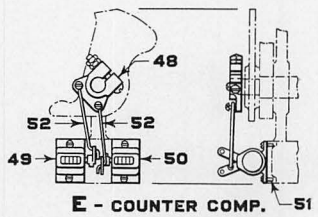

E - COUNTER COMP.

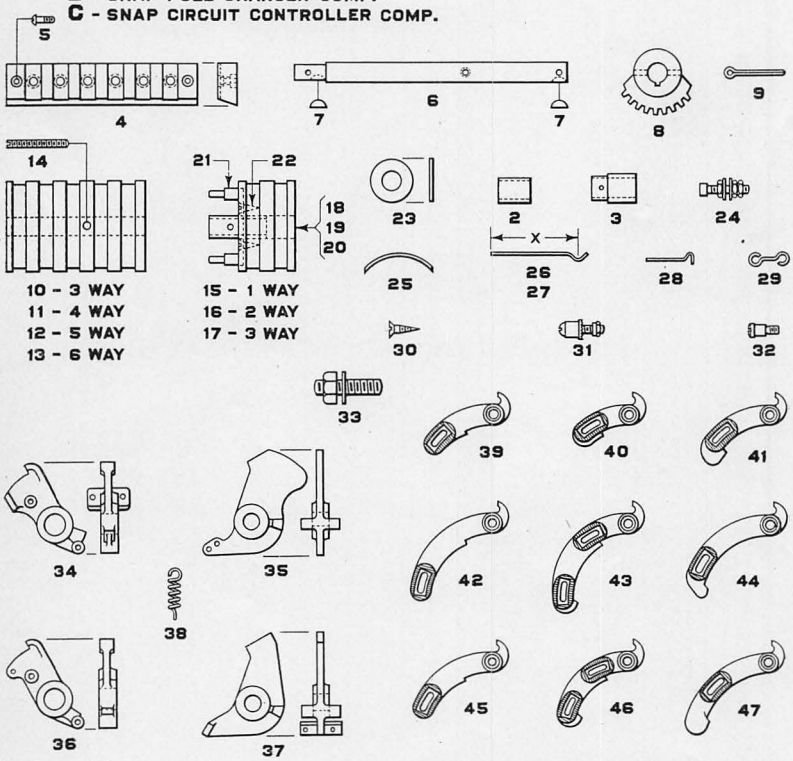

Model 2A Circuit Controller for Top-of-Mast Signals

March 1916 GENERAL RAILWAY SIGNAL COMPANY

Model 2A

Circuit Controller and Parts

For Top-of-Mast Signal Mechanism

NOTE: Circuit controller as illustrated on opposite page is shown principally for convenience in ordering repair parts. When circuit controller complete is desired, that shown on Plate H1401 will be furnished unless it is specifically specified in the order that the circuit controller shown on the opposite page is desired.

For relay type contacts and other parts of circuit controller see Plate H1407.

SPECIFICATIONS FOR CIRCUIT CONTROLLER:

1. Specify whether signal is two or three position.
2. Specify whether signal operates in upper or lower quadrant, right or left hand indication.
3. Specify degrees of travel of signal arm.
4. Specify whether or not pole changing contacts are required. If required, state position of signal arm at which polarity is to be changed.
5. Specify whether dynamic or battery indication.
6. Specify number of extra contacts.
7. Specify position of signal arm at which each extra contact is to make and break.

Extra contacts are all contacts other than those required for the local control of signal mechanism in question.

Combinations of contacts are as follows:

12 drag contacts.
10 drag contacts and 2 snap contacts.
8 drag contacts and 4 snap contacts.
6 drag contacts and 6 snap contacts.

Drawing references are shown for convenience in checking shipping lists and invoices.

Fig. No.	Name	Drawing Reference
	Order by plate, figure number and name	
A	Circuit Controller Complete. See specifications above.....	
B	Snap Pole Changer Complete. See specifications above.....	
C	Snap Circuit Controller Complete, equipped with regular Contacts in place of Pole Changer Contacts Fig. D. See specifications above.....	
D	Pole Changer Contact Complete. For details see Plate H1407 Fig. B.....	

GENERAL RAILWAY SIGNAL COMPANY March 1916

Model 2A

Circuit Controller and Parts

For Top-of-Mast Signal Mechanism

Drawing references are shown for convenience in checking shipping lists and invoices.

Fig. No.	Name	Drawing Reference
	Order by plate, figure number and name	
E	Counter Complete as shown, for three position Signals. (1-48, 1-49, 1-50, 4-51, 2-52)	35843
E1	Counter Complete, for two position Signals. (1-48, 1-50, 2-51, 1-52)	35842
1	Frame, with Bushing Fig. 2	
2	Bushing, for Frame Fig. 1	29850
3	Bushing, used with five way Commutator when no Snap Commutator is used	29980
4	Contact Block	29858
5	Screw, No. 10 x $\frac{5}{8}''$ rd. hd., for fastening Contact Block Fig. 4 to Frame Fig. 1	2829
6	Shaft	29974
6a	as above, except with two Woodruff Keys Fig. 7 and one $\frac{1}{8}''$ x $\frac{3}{4}''$ Cotter Pin	
7	Woodruff Key, for fastening Sector Fig. 8 and Trippers Fig. 35 and Fig. 37 to Shaft Fig. 6	027
8	Sector, for operating Circuit Controller	29842
9	Cotter Pin, $\frac{3}{16}''$ x $2''$, for fastening Sector Fig. 8 to Shaft Fig. 6.	046
10	Drag Commutator, three way	30888
11	Drag Commutator, four way	30823
12	Drag Commutator, five way	29972
13	Drag Commutator, six way	30838
14	Set Screw, No. 10 x $1\frac{5}{16}''$, headless, for fastening Drag Commutators to Shaft	42147
15	Snap Commutator, one way, with Plate, Bushing and Screws. (1-18, 1-21, 4-22)	29984
16	Snap Commutator, two way, with Plate, Bushing and Screws. (1-19, 1-21, 4-22)	30886
17	Snap Commutator, three way, with Plate, Bushing and Screws. (1-20, 1-21, 4-22)	30885
18	Snap Commutator, one way, with Bushing, for Fig. 15	

March 1916 GENERAL RAILWAY SIGNAL COMPANY

Model 2A

Circuit Controller and Parts

For Top-of-Mast Signal Mechanism

Drawing references are shown for convenience in checking shipping lists and invoices.

Fig. No.	Name	Drawing Reference
	Order by plate, figure number and name	
19	Snap Commutator, two way, with Bushing, for Fig. 16	
20	Snap Commutator, three way, with Bushing, for Fig. 17	
21	Plate, with Studs, for Snap Commutators Figs. 15, 16 and 17	
22	Screw, No. 8 x 1″ flat head, for fastening Plate Fig. 21 to Snap Commutators Fig. 19 and Fig. 20	0599
22a	Screw, No. 8 x $\frac{3}{4}$″, flat head, for fastening Plate Fig. 21 to Snap Commutator Fig. 18	26513
23	Washer, used between Commutators	35133
24	Binding Post, with Nuts and Washers. (1-24a, 3-24b, 2-24c)	
24a	Screw, $\frac{1}{4}$″ x $1\frac{1}{4}$″, sq. hd., for Binding Post Fig. 24	21713
24b	Nut, $\frac{1}{4}$″ hex., for Binding Post Fig. 24	20098
24c	Washer, $\frac{1}{4}$″, for Binding Post Fig. 24	1225
25	Contact. State the positions of Signal Arm at which Contact is to make and break	
26	Contact Spring, dimension X = $2\frac{5}{8}$″	29966
27	Contact Spring, dimension X = $2\frac{3}{4}$″	30829
28	Adjuster, for Contact Springs Fig. 26 and Fig. 27	29967
29	Connector, for Binding Posts	35377
30	Wood Screw, No. 6 x $\frac{1}{2}$″, flat head, for fastening Contact Fig. 25 to Commutators	30127
31	Knob, with Screw and Nuts, for Latch Arms Fig. 39 to Fig. 47 inclusive. (1-31a, 1-31b, 1-31c, 1-31d)	
31a	Knob only, for Fig. 31	29969
31b	Screw, $\frac{1}{4}$″ x $1\frac{1}{4}$″, rd. hd., for Knob Fig. 31	9530
31c	Nut, $\frac{1}{4}$″ hex., for Screw Fig. 31b	7395
31d	Nut, $\frac{1}{4}$″ square, for Screw Fig. 31b	37884
32	Stud, for holding Latch Arms Fig. 39 to Fig. 47 inclusive to Frame Fig. 1	29968
33	Stud, with Washer and hex. Nut, for fastening Frame Fig. 1 to Mechanism Frame	
33a	Washer, $\frac{1}{2}$″, for Stud Fig. 33	17492

GENERAL RAILWAY SIGNAL COMPANY March 1916

Model 2A

Circuit Controller and Parts

For Top-of-Mast Signal Mechanism

Drawing references are shown for convenience in checking shipping lists and invoices.

Fig. No.	Name	Drawing Reference
	Order by plate, figure number and name	
33b	Nut, $\frac{1}{2}''$ hex., for Stud Fig. 33	0286
34	Latch, used with Tripper Fig. 35	29853
35	Tripper, keyway not cut, used with Latch Fig. 34	
36	Latch, used with Tripper Fig. 37	30512
37	Tripper, keyway not cut, used with Latch Fig. 36	
38	Spring, for Latch Arms Fig. 34 and Fig. 36	38187
39	Latch Arm, 2 position, snaps at 60°	29854
40	Latch Arm, 2 position, snaps at 45°	32732
41	Latch Arm, 2 position, snaps at 45° going to danger, for 10 volt three position Signal	30029
42	Latch Arm, 2 position, snaps at 90°	30510
43	Latch Arm, 3 position, snaps at 45° and 90°	29851
44	Latch Arm, 2 position, latches at 60° and snaps at 75° to 90°	37990
45	Latch Arm, 2 position, snaps at 75°	29996
46	Latch Arm, 3 position, snaps at $37\frac{1}{2}°$ and 75°	30839
47	Latch Arm, 2 position, latches at 45° and snaps at 55° to 60°	38455
48	Clamp Arm, with Screw and Nuts, for Counters. (1-48a, 1-48b, 2-48c, 2-48d)	
48a	Clamp Arm only, for Fig. 48	30874
48b	Screw, No. 10 x $1\frac{1}{4}''$ rd. hd., for Clamp Arm Fig. 48	4591
48c	Nut, No. 10 hex., for Screw Fig. 48b	577
48d	Screw, No. 6 x $\frac{3}{8}''$ rd. hd., for holding Operating Rod Fig. 52 to Clamp Arm Fig. 48	36392
49	Counter, left hand	20567
50	Counter, right hand	26674
51	Screw, No. 4 x $\frac{3}{8}''$ rd. hd., for fastening Counters Fig. 49 and Fig. 50 to Frame Fig. 1	29107
52	Operating Rod, for Counters Fig. 49 and Fig. 50	30806

Memoranda

PLATE H1405

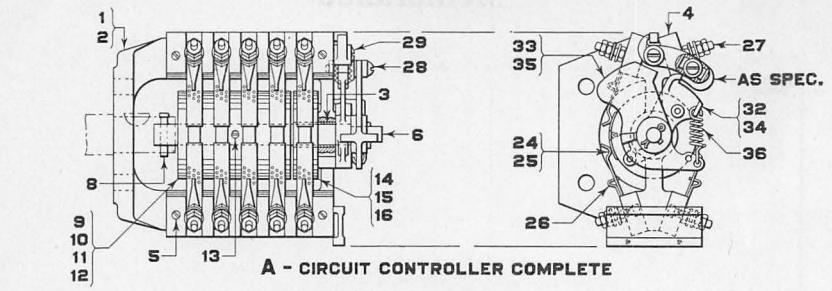

A - CIRCUIT CONTROLLER COMPLETE

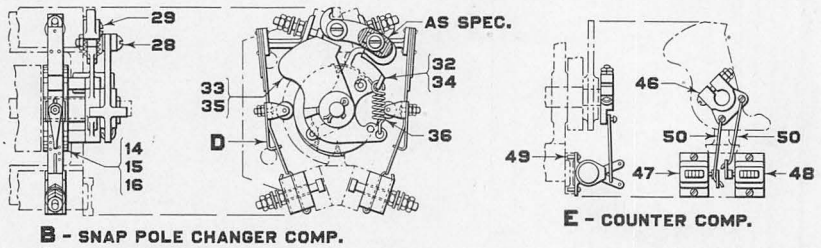

B - SNAP POLE CHANGER COMP.
C - SNAP CIRCUIT CONTROLLER COMP.

E - COUNTER COMP.

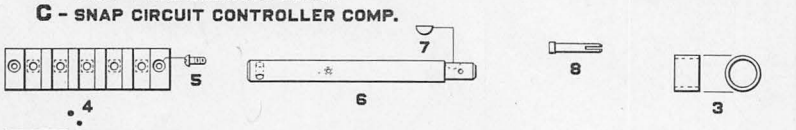

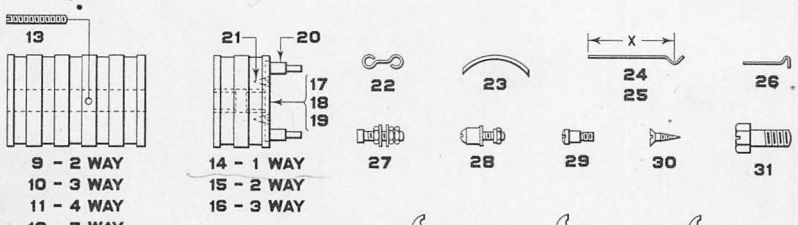

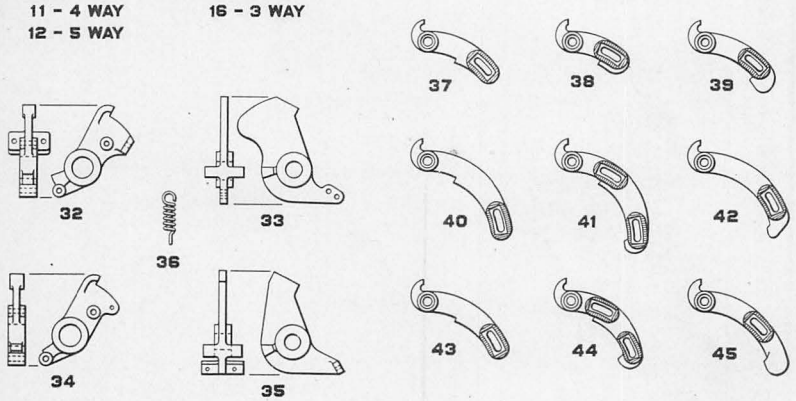

Model 2A Circuit Controller for Base-of-Mast Signals

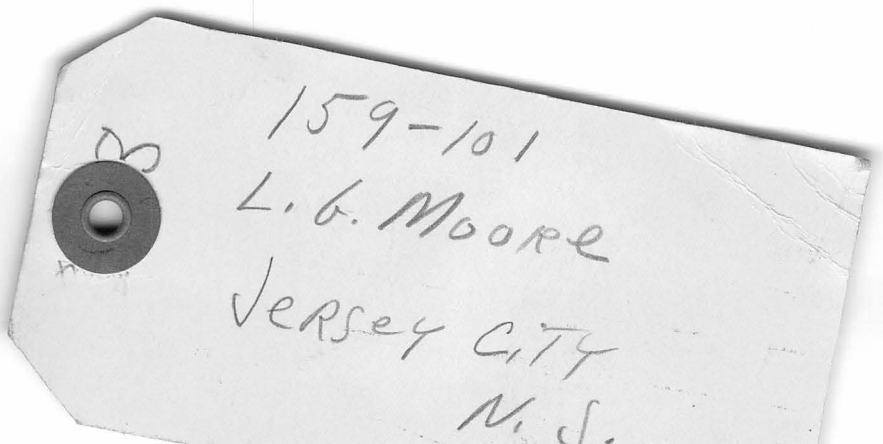
159-101
L. G. Moore
Jersey City
N. J.

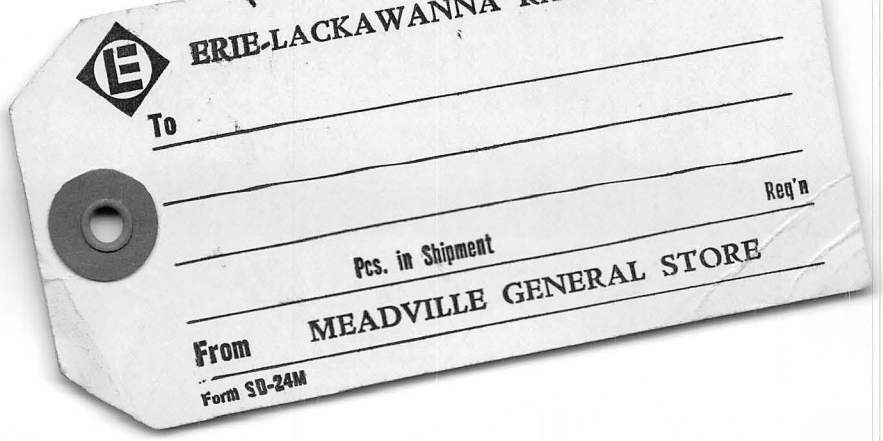
ERIE-LACKAWANNA
To
Req'n
Pcs. in Shipment
From MEADVILLE GENERAL STORE
Form SD-24M

March 1916 GENERAL RAILWAY SIGNAL COMPANY

Model 2A

Circuit Controller and Parts

For Base-of-Mast Signal Mechanism

Maximum contact equipment is shown merely as a matter of information.

For relay type contacts and other parts of circuit controller see Plate H1407.

SPECIFICATIONS FOR CIRCUIT CONTROLLER:

1. Specify whether signal is two or three position.
2. Specify whether signal operates in upper or lower quadrant, right or left hand indication.
3. Specify degrees of travel of signal arm.
4. Specify whether or not pole changing contacts are required. If required, state position of signal arm at which polarity is to be changed.
5. Specify whether dynamic or battery indication.
6. Specify number of extra contacts.
7. Specify position of signal arm at which each extra contact is to make and break.

Extra contacts are all contacts other than those required for the local control of signal mechanism in question.

Combinations of contacts are as follows:

10 drag contacts.
8 drag contacts and 2 snap contacts.
6 drag contacts and 4 snap contacts.
4 drag contacts and 6 snap contacts.

Drawing references are shown for convenience in checking shipping lists and invoices.

Fig. No.	Name	Drawing Reference
	Order by plate, figure number and name	
A	Circuit Controller Complete. See specifications above.....	
B	Snap Pole Changer Complete. See specifications above.....	
C	Snap Circuit Controller Complete, equipped with regular Contacts in place of Pole Changer Contacts Fig. D. See specifications above.....	
D	Pole Changer Contact Complete. For details see Plate H1407 Fig. B.....	

GENERAL RAILWAY SIGNAL COMPANY March 1916

Model 2A

Circuit Controller and Parts

For Base-of-Mast Signal Mechanism

Drawing references are shown for convenience in checking shipping lists and invoices.

Fig. No.	Name	Drawing Reference
	Order by plate, figure number and name	
E	Counter Complete as shown, for three position Signals. (1-46, 1-47, 1-48, 4-49, 2-50)	35843
E1	Counter Complete, for two position Signals. (1-46, 1-48, 2-49, 1-50)	35842
1	Frame, left hand, with Bushing Fig. 3	
2	Frame, right hand, with Bushing Fig. 3	
3	Bushing, for Frames Fig. 1 and Fig. 2 and Latches Fig. 32 and Fig. 34	36395
4	Contact Block	42306
5	Screw, No. 10 x $\frac{5}{8}$″ rd. hd., for fastening Contact Block Fig. 4 to Frames Fig. 1 or Fig. 2	2829
6	Shaft	36459
6a	as above, except with one Woodruff Key Fig. 7 and one $\frac{1}{8}$″ x $\frac{3}{4}$″ Cotter Pin	
7	Woodruff Key, for fastening Trippers Fig. 33 and Fig. 35 to Shaft Fig. 6	027
8	Pin, for connecting Shaft Fig. 6 to Main Shaft	42146
9	Drag Commutator, two way	36399
10	Drag Commutator, three way	30888
11	Drag Commutator, four way	30823
12	Drag Commutator, five way	29972
13	Set Screw, No. 10 x $1\frac{15}{16}$″, headless, for fastening Drag Commutators to Shaft	42147
14	Snap Commutator, one way, with Plate, Bushings and Screws. (1-17, 1-20, 4-21)	36394
15	Snap Commutator, two way, with Plate, Bushings and Screws. (1-18, 1-20, 4-21)	36393
16	Snap Commutator, three way, with Plate, Bushings and Screws. (1-19, 1-20, 4-21)	36398
17	Snap Commutator, one way, with Bushing, for Fig. 14	
18	Snap Commutator, two way, with Bushings, for Fig. 15	

March 1916 GENERAL RAILWAY SIGNAL COMPANY

Model 2A

Circuit Controller and Parts

For Base-of-Mast Signal Mechanism

Drawing references are shown for convenience in checking shipping lists and invoices.

Fig. No.	Name	Drawing Reference
	Order by plate, figure number and name	
19	Snap Commutator, three way, with Bushings, for Fig. 16	
20	Plate, with Studs, for Snap Commutators Figs. 14, 15 and 16	
21	Screw, No. 8 x 1″ flat head, for fastening Plate Fig. 20 to Snap Commutators Fig. 18 and Fig. 19	0599
21a	Screw, No. 8 x $\frac{3}{4}$″, flat head, for fastening Plate Fig. 20 to Snap Commutator Fig. 17	26513
22	Connector, for Binding Posts	35377
23	Contact, state the positions of Signal Arm at which Contact is to make and break	
24	Contact Spring, dimension X = $2\frac{5}{8}$″	29966
25	Contact Spring, dimension X = $2\frac{3}{4}$″	30829
26	Adjuster, for Contact Springs Fig. 24 and Fig. 25	29967
27	Binding Post, with Nuts and Washers. (1-27a, 3-27b, 2-27c)	
27a	Screw, $\frac{1}{4}$″ x $1\frac{1}{4}$″ sq. hd., for Binding Post Fig. 27	21713
27b	Nut, $\frac{1}{4}$″ hex., for Binding Post Fig. 27	20098
27c	Washer, $\frac{1}{4}$″, for Binding Post Fig. 27	1225
28	Knob, with Screw and Nuts, for Latch Arms Fig. 37 to Fig. 45 inclusive. (1-28a, 1-28b, 1-28c, 1-28d)	
28a	Knob only, for Fig. 28	29969
28b	Screw, $\frac{1}{4}$″ x $1\frac{1}{4}$″ rd. hd., for Knob Fig. 28	9530
28c	Nut, $\frac{1}{4}$″ hex., for Screw Fig. 28c	7395
28d	Nut, $\frac{1}{4}$″, square, for Screw Fig. 28c	37884
29	Stud, for holding Latch Arms Fig. 37 to Fig. 45 inclusive to Frames Fig. 1 or Fig. 2	29968
30	Wood Screw, No. 6 x $\frac{1}{2}$″, flat head, for fastening Contact Fig. 23 to Commutators	30127
31	Cap Screw, $\frac{1}{2}$″ x $1\frac{1}{4}$″ hex. hd., for fastening Frames Fig. 1 and Fig. 2 to Mechanism Frame	5255
32	Latch, used with Tripper Fig. 33	29853
33	Tripper, keyway not cut, used with Latch Fig. 32	
34	Latch, used with Tripper Fig. 35	30512

GENERAL RAILWAY SIGNAL COMPANY March 1916

Model 2A

Circuit Controller and Parts

For Base-of-Mast Signal Mechanism

Drawing references are shown for convenience in checking shipping lists and invoices.

Fig. No.	Name	Drawing Reference
	Order by plate, figure number and name	
35	Tripper, keyway not cut, used with Latch Fig. 34	
36	Spring, for Latch Arms Fig. 32 and Fig. 34	38187
37	Latch Arm, 2 position, snaps at 60°	29854
38	Latch Arm, 2 position, snaps at 45°	32732
39	Latch Arm, 2 position, snaps at 45° going to danger, for 10 volt three position Signal	30029
40	Latch Arm, 2 position, snaps at 90°	30510
41	Latch Arm, 3 position, snaps at 45° and 90°	29851
42	Latch Arm, 2 position, latches at 60° and snaps at 75° to 90°	37990
43	Latch Arm, 2 position, snaps at 75°	29996
44	Latch Arm, 3 position, snaps at $37\frac{1}{2}°$ and 75°	30839
45	Latch Arm, 2 position, latches at 45° and snaps at 55° to 60°	38455
46	Clamp Arm, with Screw and Nuts, for Counters. (1-46a, 1-46b, 2-46c, 2-46d)	
46a	Clamp Arm only, for Fig. 46	30874
46b	Screw, No. 10 x $1\frac{1}{4}$″ rd. hd., for Clamp Arm Fig. 46	4591
46c	Nut, No. 10 hex., for Screw Fig. 46b	577
46d	Screw, No. 6 x $\frac{3}{8}$″ rd. hd., for holding Operating Rod Fig. 50 to Clamp Arm Fig. 46	36392
47	Counter, left hand	20567
48	Counter, right hand	26674
49	Screw, No. 4 x $\frac{3}{8}$″ rd. hd., for fastening Counters Fig. 47 and Fig. 48 to Frames Fig. 1 and Fig. 2	29107
50	Operating Rod, for Counters Fig. 47 and Fig. 48	30806

Memoranda

PLATE H1407

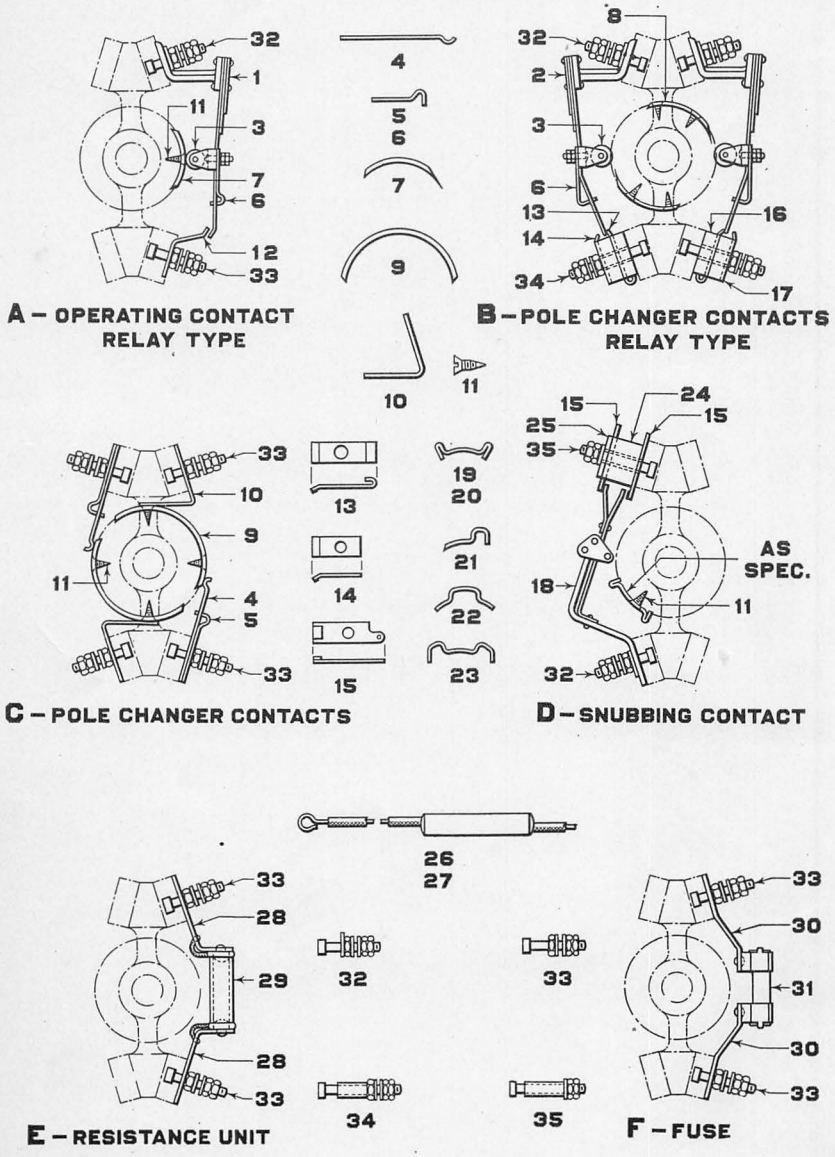

Model 2A Circuit Controller Parts

March 1916 GENERAL RAILWAY SIGNAL COMPANY

Model 2A Circuit Controller

Operating Contacts

Pole Changer Contacts, Etc.

Drawing references are shown for convenience in checking shipping lists and invoices.

Fig. No.	Name	Drawing Reference
	Order by plate, figure number and name	
A	Operating Contact Complete as shown, Relay Type. Specify position of Signal Arm at which Contact is to make and break. (1-1, 1-7, 1-11, 1-12, 1-32, 1-33)	35320
B	Pole Changer Contacts Complete as shown, Relay Type. Specify position of Signal Arm at which Polarity is to be changed. (2-2, 2-8, 4-11a, 2-13, 2-14, 2-16, 2-17, 2-32, 2-34)	
C	Pole Changer Contacts Complete as shown. (2-4, 2-5, 2-9, 2-10, 4-11, 4-33)	
D	Snubbing Contact Complete as shown. Specify Tripper required, see Fig. 19 to Fig. 23 inclusive. (2-15, 1-18, 1-24, 1-25, 1-32, 1-35, 1-Tripper Fig. 19 to Fig. 23 inclusive as specified)	33539
E	Resistance Unit Complete as shown, resistance 250 ohms. (2-28, 1-29, 2-33)	
F	Fuse Complete as shown, 3 amperes. (2-30, 1-31, 2-33)	
1	Contact Arm Complete, includes Contact Spring, Adjuster and Roller, for Operating Contact Fig. A	35321
2	Contact Arm Complete, includes Contact Spring, Adjuster and Roller, for Pole Changer Contacts Fig. B	38461
3	Roller Complete, includes Support, Stud and Nuts, for Fig. A and Fig. B	
3a	as above, except without Nuts	42470
3b	Nut, No. 8, hex., for Roller Complete Fig. 3	9188
4	Contact Spring, for Pole Changer Contacts Fig. C	30829
5	Adjuster, for Contact Spring Fig. 4	29967
6	Adjuster, for Contact Arms Fig. 1 and Fig. 2	35332
7	Tripper, for Operating Contact Fig. A. Specify positions of Signal Arms at which Contact is to make and break.	
8	Tripper, for Pole Changer Contacts Fig. B	38468
8a	as above, except with two Screws Fig. 11a	

GENERAL RAILWAY SIGNAL COMPANY March 1916

Model 2A Circuit Controller

Operating Contacts

Pole Changer Contacts, Etc.

Drawing references are shown for convenience in checking shipping lists and invoices.

Fig. No.	Name	Drawing Reference
	Order by plate, figure number and name	
9	Contact Piece, for Pole Changer Contacts Fig. C	37919
9a	as above, except with two Screws Fig. 11	
10	Contact Spring, for Pole Changer Contacts Fig. C	37918
11	Wood Screw (brass), No. 6 x ½″ flat hd., for fastening Contact Fig. 7 to Commutator	30127
11a	Wood Screw (steel), No. 6 x½″ flat head, for fastening Contact Fig. 8 to Commutator	44734
12	Contact Spring, for Operating Contact Fig. A	35322
13	Front Contact, for Pole Changer Contacts Fig. B	38464
14	Back Contact, for Pole Changer Contacts Fig. B	38466
15	Contact Spring, for Snubbing Contact Fig. D	30641
16	Insulating Block, for Pole Changer Contacts Fig. B	38470
17	Insulating Block, for Pole Changer Contacts Fig. B	38469
18	Contact Arm Complete, includes Contacts, Roller and Support.	33530
19	Tripper, for Snubbing Contact Fig. D, for three position 90° Signals	30639
19a	as above, except with one Screw Fig. 11	
20	Tripper, for Snubbing Contact Fig. D, for three position 75° Signals	30879
20a	as above, except with one Screw Fig. 11	
21	Tripper, for Snubbing Contact Fig. D, for two position 0° to 45° or 45° to 90° Signals	30808
21a	as above, except with one Screw Fig. 11	
22	Tripper, for Snubbing Contact Fig. D, for two position 60° Signals	34060
22a	as above, except with two Screws Fig. 11	
23	Tripper, for Snubbing Contact Fig. D, for three position 90° Signals	34364
23a	as above, except with Screw Fig. 11	
24	Insulating Block, for Snubbing Contact Fig. D	30642
25	Insulating Cap, for Snubbing Contact Fig. D	30640

March 1916 GENERAL RAILWAY SIGNAL COMPANY

Model 2A Circuit Controller

Operating Contacts

Pole Changer Contacts, Etc.

Drawing references are shown for convenience in checking shipping lists and invoices.

Fig. No.	Name	Drawing Reference
	Order by plate, figure number and name	
26	Resistance Unit, 1 ohm, for Snubbing Contact Fig. D, for Top of Mast Signals	35161
26a	as above, except 3 ohms	
26b	same as Fig. 26, except 12 ohms	
27	Resistance Unit, 1 ohm, for Snubbing Contact Fig. D, for Base of Mast Signals	40485
27a	as above, except 3 ohms	
27b	same as Fig. 27, except 12 ohms	
28	Support, with Stud, for Resistance Unit Fig. 29	43746
29	Resistance Unit, 250 ohms, for Fig. E	0319
30	Support, with Fuse Clip, for Fuse Fig. 31	30834
31	Fuse, 3 amperes, for Fig. F	0839
32	Binding Post Complete as shown, for Fig. A, Fig. B and Fig. D. (1-32a, 3-32b, 2-32c, 1-32d)	
32a	Screw, $\frac{1}{4}''$ x $1\frac{1}{4}''$ sq. hd., for Binding Posts Fig. 32 and Fig. 33	21713
32b	Nut, $\frac{1}{4}''$ hex., for Binding Posts Fig. 32, Fig. 33 and Fig. 34	20098
32c	Washer, $\frac{1}{4}''$, for Binding Posts Fig. 32, Fig. 33 and Fig. 34	1225
32d	Lock Washer, for Binding Post Fig. 32	43083
33	Binding Post Complete as shown, for Fig. A, Fig. C, Fig. E and Fig. F. (1-32a, 3-32b, 2-32c)	
34	Binding Post Complete as shown, for Fig. B. (3-32b, 2-32c, 1-34a, 1-34b)	
34a	Screw, $\frac{1}{4}''$ x $2''$ sq. hd., for Binding Post Fig. 34	21714
34b	Bushing, for Binding Post Fig. 34	38471
35	Binding Post Complete as shown, for Fig. D. (1-35a, 2-35b, 1-35c, 1-35d)	
35a	Screw, $\frac{1}{4}''$ x $1\frac{1}{2}''$, sq. hd., for Binding Post Fig. 35	16563
35b	Nut, $\frac{1}{4}''$ hex., for Binding Post Fig. 35	7395
35c	Washer, $\frac{1}{4}''$, for Binding Post Fig. 35	1225
35d	Bushing, for Binding Post Fig. 35	30644

Memoranda

Section H, Part 15

Tools
Model 2A Signal Mechanisms

Copyright, 1927, General Railway Signal Company

PLATE H1501

GENERAL RAILWAY SIGNAL COMPANY April 1927

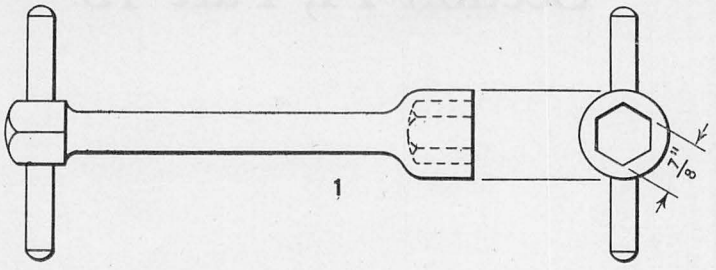

1

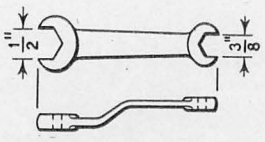

2

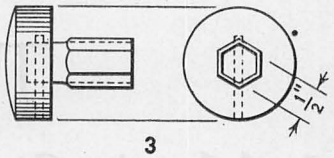

3

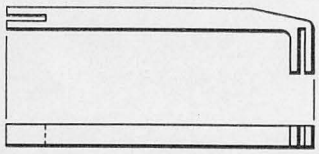

4

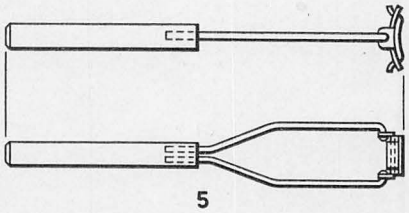

5

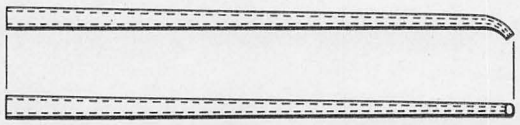

6

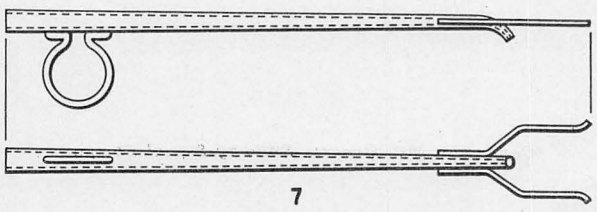

7

Tools for Model 2A Signal Mechanisms

April 1927 GENERAL RAILWAY SIGNAL COMPANY

Tools

For Model 2A Signal Mechanism

Drawing references are shown for convenience in checking shipping lists and invoices.

Fig. No.	Name	Drawing Reference
	Order by plate, figure number and name	
1	Socket Wrench, for $\frac{1}{2}''$ Nuts holding Circuit Breaker Frames to Case of Top of Mast Signal Mechanism	15197
2	Wrench, for $\frac{1}{4}''$ and No. 10 Nuts	43576-1
3	Socket Wrench, for $\frac{1}{4}''$ Nuts	35716
4	Contact Adjuster, for adjusting Contact Springs on Model 2A Circuit Controllers	48792
5	Sand Paper Holder, for cleaning Contacts on Model 2A Circuit Controllers	39582
6	Oiler, for back bearing of Motors for Model 2A Top of Mast Signal Mechanism	
7	Oiler, for back bearing of Motors for Model 2A Base of Mast Signal Mechanism	

Memoranda

Section H, Part 17

Supersedes Plates H0124, H0125 and H0126 dated January 1912

Signal Masts, Ladders, Bearings, Lamp Brackets, Etc.

PLATE H1701

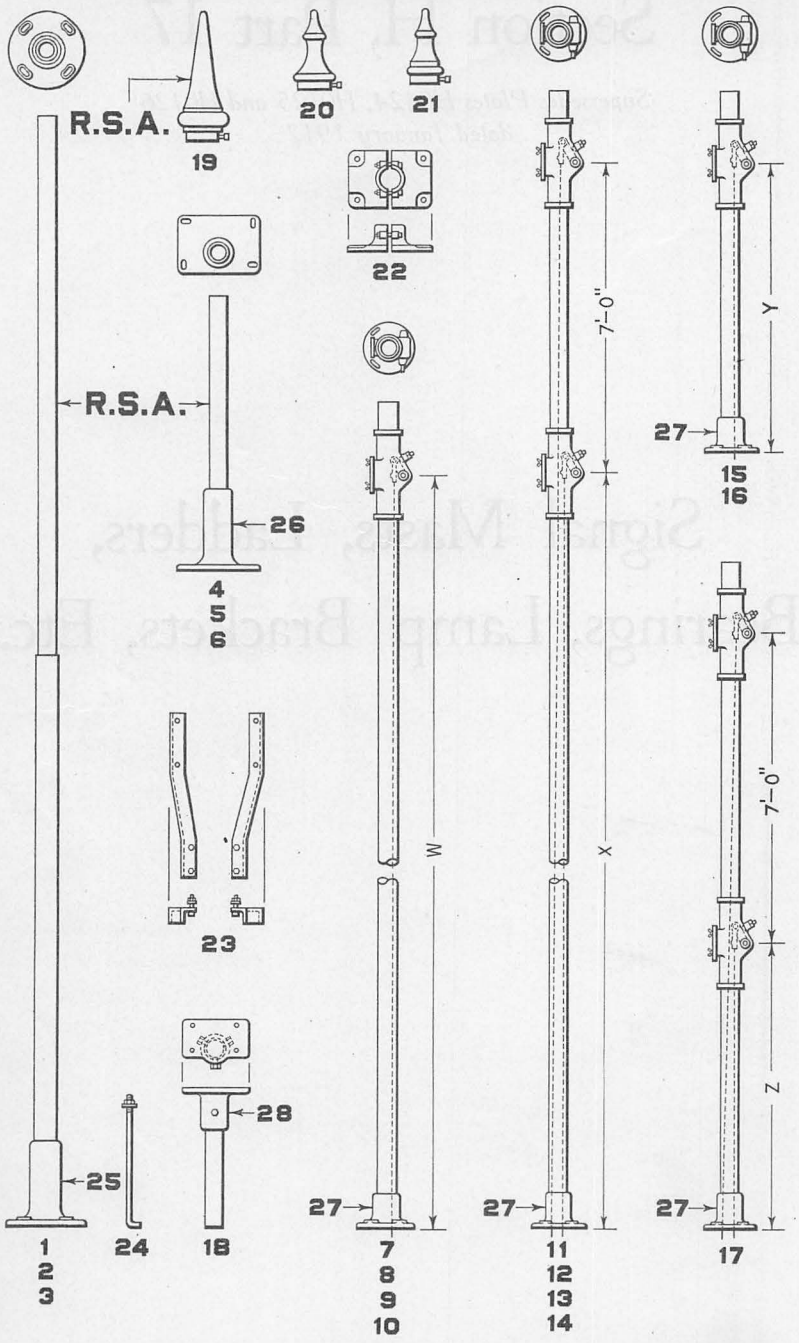

Masts, Bases, Pinnacles, Etc.

March 1916 GENERAL RAILWAY SIGNAL COMPANY

Masts, Bases, Pinnacles, Etc.

For Bearings see Plates H1705 and H1706.

Drawing references are shown for convenience in checking shipping lists and invoices.

Fig. No.	Name	Drawing Reference
	Order by plate, figure number and name	
1	Mast, 25′–0″ long of 5″ and 6″ pipe, drilled for one Wire Outlet, includes Base. Used on One Arm Top of Mast Ground Signals shown on Plates H0101 and H0107 Fig. A to Fig. E inclusive. R. S. A. Std.	
1a	as above, except with R. S. A. Pinnacle Fig. 19.	
1b	same as Fig. 1, except with Pinnacle Fig. 20.	
2	Mast, 32′–0″ long of 5″ and 6″ pipe, drilled for one Wire Outlet, includes Base. Used on High Arm Top of Mast Ground Signals shown on Plates H0101 and H0107 Fig. F to Fig. K inclusive. R. S. A. Std.	
2a	as above, except with R. S. A. Pinnacle Fig. 19.	
2b	same as Fig. 2, except with Pinnacle Fig. 20.	
2c	Mast, 32′–0″ long of 5″ and 6″ pipe, drilled for two Wire Outlets, includes Base. Used on Two Arm Top of Mast Ground Signals shown on Plates H0111, H0112 and H0117 Fig. A to Fig. E inclusive. R. S. A. Std.	
2d	as above, except with R. S. A. Pinnacle Fig. 19.	
2e	same as Fig. 2c, except with Pinnacle Fig. 20.	
3	Mast, 38′–0″ long of 5″ and 6″ pipe, drilled for two Wire Outlets, includes Base. Used on High Two Arm Top of Mast Ground Signals shown on Plates H0111, H0112 and H0117 Fig. F to Fig. K inclusive. R. S. A. Std.	
3a	as above, except with R. S. A. Pinnacle Fig. 19.	
3b	same as Fig. 3, except with Pinnacle Fig. 20.	
3c	Mast, 38′–0″ long of 5″ and 6″ pipe, drilled for three Wire Outlets, includes Base. Used on Three Arm Top of Mast Ground Signals shown on Plate H0121. R. S. A. Std.	
3d	as above, except with R. S. A. Pinnacle Fig. 19.	
3e	same as Fig. 3c, except with Pinnacle Fig. 20.	

GENERAL RAILWAY SIGNAL COMPANY March 1916

Masts, Bases, Pinnacles, Etc.

Drawing references are shown for convenience in checking shipping lists and invoices.

Fig. No.	Name	Drawing Reference
	Order by plate, figure number and name	
4	Mast, 6′–0″ long of 5″ pipe, drilled for one Wire Outlet, includes Base. Used on One Arm Top of Mast Bracket or Bridge Signals shown on Plate H0302 Fig. A to Fig. E inclusive. R. S. A. Std.	
4a	as above, except with R. S. A. Pinnacle Fig. 19.	
4b	same as Fig. 4, except with Pinnacle Fig. 20.	
5	Mast, 13′–0″ long of 5″ pipe, drilled for one Wire Outlet, includes Base. Used on One Arm Top of Mast Bracket or Bridge Signals shown on Plate H0302 Fig. F to Fig. K inclusive and Plate H0306 Fig. A to Fig. E inclusive. R. S. A. Std.	
5a	as above, except with R. S. A. Pinnacle Fig. 19.	
5b	same as Fig. 5, except with Pinnacle Fig. 20.	
5c	Mast, 13′–0″ long of 5″ pipe, drilled for two Wire Outlets, includes Base. Used on Two Arm Top of Mast Bracket or Bridge Signals shown on Plates H0311 and H0312 Fig. A to Fig. E inclusive. R. S. A. Std.	
5d	as above, except with R. S. A. Pinnacle Fig. 19.	
5e	same as Fig. 5c, except with Pinnacle Fig. 20.	
6	Mast, 19′–0″ long of 5″ pipe, drilled for two Wire Outlets, includes Base. Used on High Two Arm Top of Mast Bracket or Bridge Signals shown on Plates H0311 and H0312 Fig. F to Fig. K inclusive and Plate H0317 Fig. A to Fig. E inclusive. R. S. A. Std.	
6a	as above, except with R. S. A. Pinnacle Fig. 19.	
6b	same as Fig. 6, except with Pinnacle Fig. 20.	
6c	Mast, 19′–0″ long of 5″ pipe, drilled for three Wire Outlets, includes Base. Used on Three Arm Top of Mast Bracket or Bridge Signals shown on Plate H0321 Fig. A to Fig. E inclusive. R. S. A. Std.	
6d	as above, except with R. S. A. Pinnacle Fig. 19.	
6e	same as Fig. 6c, except with Pinnacle Fig. 20.	

Masts, Bases, Pinnacles, Etc.

Drawing references are shown for convenience in checking shipping lists and invoices.

Fig. No.	Name	Drawing Reference
	Order by plate, figure number and name	
7	Mast Complete, 5″ pipe (dimension W = 20′–2″) includes Base, Bearing Complete Plate H1706 Fig. A and Operating Wire. Used on One Arm Upper Quadrant Base of Mast Ground Signals with Mechanism Case shown on Plate H0201 Fig. A to Fig. C inclusive.	
7a	as above, except with R. S. A. Pinnacle Fig. 19.	
7b	Mast Complete, 5″ pipe (dimension W = 20′–5″), includes Base, Bearing Complete Plate H1706 Fig. B and Operating Rod. Used on One Arm Lower Quadrant Base of Mast Ground Signals with Mechanism Case shown on Plate H0207 Fig. A to Fig. C inclusive.	
7c	as above, except with Pinnacle Fig. 20.	
8	Mast Complete, 5″ pipe (dimension W = 17′–0″), includes Base, Bearing Complete Plate H1706 Fig. A and Operating Wire. Used on One Arm Upper Quadrant Base of Mast Ground Signals with Mechanism and Battery Case shown on Plate H0201 Fig. D to Fig. F inclusive.	
8a	as above, except with R. S. A. Pinnacle Fig. 19.	
8b	Mast Complete, 5″ pipe (dimension W = 17′–3″), includes Base, Bearing Complete Plate H1706 Fig. B and Operating Rod. Used on One Arm Lower Quadrant Base of Mast Ground Signals with Mechanism and Battery Case shown on Plate H0207 Fig. D to Fig. F inclusive.	
8c	as above, except with Pinnacle Fig. 20.	
9	Mast Complete, 5″ pipe (dimension W = 26′–8″), includes Base, Bearing Complete Plate H1706 Fig. A and Operating Wire. Used on High One Arm Upper Quadrant Base of Mast Ground Signals with Mechanism Case shown on Plate H0202 Fig. A to Fig. C inclusive.	
9a	as above, except with R. S. A. Pinnacle Fig. 19.	

GENERAL RAILWAY SIGNAL COMPANY March 1916

Masts, Bases, Pinnacles, Etc.

Drawing references are shown for convenience in checking shipping lists and invoices.

Fig. No.	Name	Drawing Reference
	Order by plate, figure number and name	
9b	Mast Complete, 5″ pipe (dimension W = 26′–5″), includes Base, Bearing Complete Plate H1706 Fig. B and Operating Rod. Used on High One Arm Lower Quadrant Base of Mast Ground Signals with Mechanism Case shown on Plate H0208 Fig. A to Fig. C inclusive.	
9c	as above, except with Pinnacle Fig. 20.	
10	Mast Complete, 5″ pipe (dimension W = 23′–6″), includes Base, Bearing Complete Plate H1706 Fig. A and Operating Wire. Used on High One Arm Upper Quadrant Base of Mast Ground Signals with Mechanism and Battery Case shown on Plate H0202 Fig. D to Fig. F inclusive.	
10a	as above, except with R. S. A. Pinnacle Fig. 19.	
10b	Mast Complete, 5″ pipe (dimension W = 23′–3″), includes Base, Bearing Complete Plate H1706 Fig. B and Operating Rod. Used on High One Arm Lower Quadrant Base of Mast Ground Signals with Mechanism and Battery Case shown on Plate H0208 Fig. D to Fig. F inclusive.	
10c	as above, except with Pinnacle Fig. 20.	
11	Mast Complete, 5″ pipe (dimension X = 20′–2″), includes Base, two Bearings Complete Plate H1706 Fig. A and Operating Wires. Used on Two Arm Upper Quadrant Base of Mast Ground Signals with Mechanism Case shown on Plates H0211 and H0213 Fig. A to Fig. C inclusive	
11a	as above, except with R. S. A. Pinnacle Fig. 19.	
11b	Mast Complete, 5″ pipe (dimension X = 20′–5″), includes Base, two Bearings Complete Plate H1706 Fig. B and Operating Rods. Used on Two Arm Lower Quadrant Base of Mast Ground Signals with Mechanism Case shown on Plate H0221 Fig. A to Fig. C inclusive.	
11c	as above, except with Pinnacle Fig. 20.	

March 1916 GENERAL RAILWAY SIGNAL COMPANY

Masts, Bases, Pinnacles, Etc.

Drawing references are shown for convenience in checking shipping lists and invoices.

Fig. No.	Name	Drawing Reference
	Order by plate, figure number and name	
12	Mast Complete, 5″ pipe (dimension X = 17′–0″), includes Base, two Bearings Complete Plate H1706 Fig. A and Operating Wires. Used on Two Arm Upper Quadrant Base of Mast Ground Signals with Mechanism and Battery Case shown on Plates H0211 and H0213 Fig. D to Fig. F inclusive	
12a	as above, except with R. S. A. Pinnacle Fig. 19	
12b	Mast Complete, 5″ pipe (dimension X = 17′–3″), includes Base, two Bearings Complete Plate H1706 Fig. B and Operating Rods. Used on Two Arm Lower Quadrant Base of Mast Ground Signals with Mechanism and Battery Case shown on Plate H0221 Fig. D to Fig. F inclusive.	
12c	as above, except with Pinnacle Fig. 20	
13	Mast Complete, 5″ pipe (dimension X = 26′–8″), includes Base, two Bearings Complete Plate H1706 Fig. A and Operating Wires. Used on High Two Arm Upper Quadrant Base of Mast Ground Signals with Mechanism Case shown on Plates H0212 and H0214 Fig. A to Fig. C inclusive	
13a	as above, except with R. S. A. Pinnacle Fig. 19	
13b	Mast Complete, 5″ pipe (dimension X = 26′–5″), includes Base, two Bearings Complete Plate H1706 Fig. B and Operating Rods. Used on High Two Arm Lower Quadrant Base of Mast Ground Signals with Mechanism Case shown on Plate H0222 Fig. A to Fig. C inclusive	
13c	as above, except with Pinnacle Fig. 20	
14	Mast Complete, 5″ pipe (dimension X = 23′–6″), includes Base, two Bearings Complete Plate H1706 Fig. A and Operating Wires. Used on High Two Arm Upper Quadrant Base of Mast Ground Signals with Mechanism and Battery Case shown on Plates H0212 and H0214 Fig. D to Fig. F inclusive	
14a	as above, except with R. S. A. Pinnacle Fig. 19	

GENERAL RAILWAY SIGNAL COMPANY March 1916

Masts, Bases, Pinnacles, Etc.

Drawing references are shown for convenience in checking shipping lists and invoices.

Fig. No.	Name	Drawing Reference
	Order by plate, figure number and name	
14b	Mast Complete, 5″ pipe (dimension X = 23′–3″), includes Base, two Bearings Complete Plate H1706 Fig. B and Operating Rods. Used on High Two Arm Base of Mast Lower Quadrant Ground Signals with Mechanism and Battery Case shown on Plate H0222 Fig. D to Fig. F inclusive	
14c	as above, except with Pinnacle Fig. 20	
15	Mast Complete, 5″ pipe (dimension Y = 8′–2″), includes Base, two Bearings Complete Plate H1706 Fig. A and Operating Wire. Used on One Arm Upper Quadrant Base of Mast Bracket or Bridge Signals with Mechanism Case shown on Plate H0401 Fig. A to Fig. C inclusive	
15a	as above, except with R. S. A. Pinnacle Fig. 19	
15b	Mast Complete, 5″ pipe (dimension Y = 8′–2″), includes Base, Bearing Complete Plate H1706 Fig. B and Operating Rod. Used on One Arm Lower Quadrant Base of Mast Bracket or Bridge Signals with Mechanism Case shown on Piate H0407 Fig. A to Fig. C inclusive	
15c	as above, except with Pinnacle Fig. 20	
16	Mast Complete, 5″ pipe (dimension Y = 14′–2″), includes Base, Bearing Complete Plate H1706 Fig. A and Operating Wire. Used on High One Arm Upper Quadrant Base of Mast Bracket or Bridge Signals with Mechanism Case shown on Plate H0401 Fig. D to Fig. F inclusive	
16a	as above, except with R. S. A. Pinnacle Fig. 19	
17	Mast Complete, 5″ pipe (dimension Z = 7′–2″), includes Base, two Bearings Complete Plate H1706 Fig. A and Operating Wires. Used on Two Arm Upper Quadrant Base of Mast Bracket or Bridge Signals shown on Plate H0411	
17a	as above, except with R. S. A. Pinnacle Fig. 19	

March 1916 GENERAL RAILWAY SIGNAL COMPANY

Masts, Bases, Pinnacles, Etc.

Drawing references are shown for convenience in checking shipping lists and invoices.

Fig. No.	Name	Drawing Reference
	Order by plate, figure number and name	
17b	Mast Complete, 5″ pipe (dimension Z = 7′–2″), includes Base, two Bearings Complete Plate H1706 Fig. B and Operating Rods. Used on Two Arm Lower Quadrant Base of Mast Bracket or Bridge Signals with Mechanism Case shown on Plate H0417	
17c	as above, except with Pinnacle Fig. 20	
18	Pole, 3′–0½″ of 5″ pipe, includes Base and three ⅝″ x 1½″ hex. hd. Tap Bolts, for One Arm Upper Quadrant Suspended Signals shown on Plate H0309	46676
19	Pinnacle, for 5″ pipe, includes Set Screw Fig. 19a. R. S. A. Std	31602
19a	Set Screw, ⅝″ x 1″ sq. hd., for Pinnacle Fig. 19	0552
20	Pinnacle, for 5″ pipe, includes Set Screw Fig. 20a	26902
20a	Set Screw, ½″ x 1″ sq. hd., for Pinnacles Fig. 20 and Fig. 21	0210
21	Pinnacle, for 4″ pipe, includes Set Screw Fig. 20a	1661
22	Base, for 5″ pipe, for Bracket Dolls, two halves with Bolts. (2-22a, 2-22b)	
22a	Half Base only, for Base Fig. 22	
22b	Bolt, ⅝″ x 6½″ sq. hd. with hex. Nut, for Base Fig. 22	
23	Angle Irons Complete as shown, for supporting Suspended Signals. (1-23a, 1-23b, 4-23c, 4-23d)	
23a	Angle Iron only, left hand, for Fig. 23	46679
23b	Angle Iron only, right hand, for Fig. 23	46678
23c	Bolt, ⅝″ x 2½″ sq. hd. with hex. Nut, for fastening Pole Fig. 18 to Angle Irons Fig. 23a and Fig. 23b	0501
23d	Lock Washer, for Bolt Fig. 23c	0113
24	Foundation Bolt, 1″ x 3′–0″, with hex. Nut and Washer	
24a	Foundation Bolt, 1″ x 3′–0″, with hex. Nut only	
24b	Washer, for Foundation Bolt Fig. 24	074
25	Base, for 6″ pipe, for Top of Mast Ground Signals. R. S. A. Std	21211
26	Base, for 5″ pipe, for Top of Mast Bracket or Bridge Signals. R. S. A. Std	31603
27	Base, for 5″ pipe, for Base of Mast Signals	36015
28	Base, for 5″ pipe, for Suspended Signals	46677

Memoranda

Memoranda

PLATE H1703

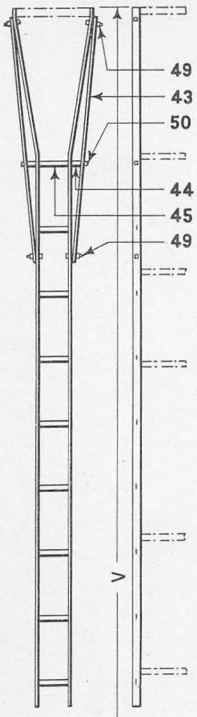

FIG. NO. V

1 – 10' – $0\frac{3}{4}$"
2 – 16' – $0\frac{3}{4}$"
3 – 23' – $7\frac{3}{4}$"
4 – 30' – $5\frac{3}{4}$"
5 – 36' – $5\frac{3}{4}$"

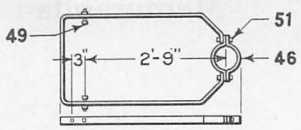

11 – FOR 5" PIPE

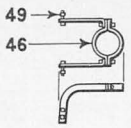

41

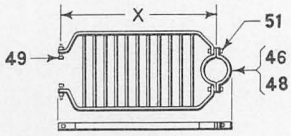

FIG. NO. X

15 – FOR 5" PIPE – – – – – 3' – 0"
16 – FOR 5" PIPE – – – – – 3' – 7"
17 – FOR SWAGED JOINT – 3' – 7"
18 – FOR SWAGED JOINT – 4' – 1"

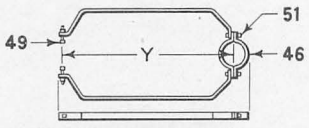

FIG. NO. Y

12 – FOR 5" PIPE – 3' – 0"
13 – FOR 5" PIPE – 3' – 4"
14 – FOR 5" PIPE – 3' – 10"

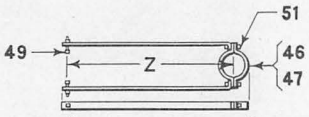

FOR 5" PIPE		FOR 6" PIPE	
FIG. NO.	Z	FIG. NO.	Z
19	1' – $3\frac{7}{8}$"	31	2' – $5\frac{7}{8}$"
20	1' – 5"	32	3' – $0\frac{3}{4}$"
21	2' – 0"	33	3' – $7\frac{5}{8}$"
22	2' – 1"	34	3' – $9\frac{1}{2}$"
23	2' – $7\frac{1}{4}$"	35	4' – $3\frac{1}{2}$"
24	2' – 8"	36	4' – $9\frac{1}{2}$"
25	3' – 0"	37	4' – $11\frac{1}{2}$"
26	3' – 2"	38	5' – $3\frac{1}{4}$"
27	3' – $3\frac{1}{2}$"	39	5' – $5\frac{1}{2}$"
28	3' – 4"	40	5' – $9\frac{1}{4}$"
29	3' – $7\frac{1}{2}$"		
30	3' – $9\frac{1}{2}$"		

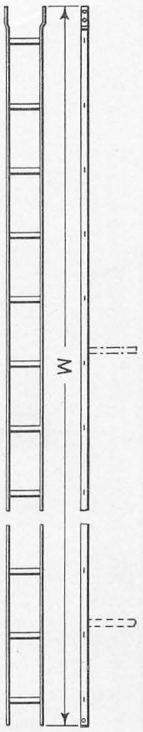

FIG. NO. W

6 – 10' – 0"
7 – 16' – 0"
8 – 23' – 8"
9 – 30' – 6"
10 – 36' – 6"

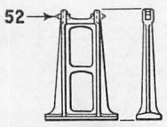

42

Ladders and Ladder Parts

March 1916 GENERAL RAILWAY SIGNAL COMPANY

Ladders and Ladder Parts

Drawing references are shown for convenience in checking shipping lists and invoices.

Fig. No.	Name	Drawing Reference
	Order by plate, figure number and name	
1	Ladder (dimension V = 10′–0¾″), includes Top Braces, Spacers and Bolts as shown, for Ladder Complete Fig. 1a	33987
1a	Ladder Complete, for One Arm and Two Arm Top of Mast Bracket or Bridge Signals shown on Plate H0302 Fig. F to Fig. K inclusive, Plate H0306, H0311 and H0312 Fig. A to Fig. E inclusive. Includes Hand Rail, Platform, Stay, Clamps and Bolts. (1-1, 1-11, 1-15, 1-25)	33992
2	Ladder (dimension V = 16′–0¾″), includes Top Braces, Spacers and Bolts as shown, for Ladder Complete Fig. 2a	33986
2a	Ladder Complete, for High Two Arm and Three Arm Top of Mast Bracket or Bridge Signals shown on Plates H0311 and H0312 Fig. F to Fig. K inclusive, Plates H0317 and H0321 Fig. A to Fig. E inclusive. Includes Hand Rails. Platforms, Stay, Clamps and Bolts. (1 2, 1-11, 1-12, 2-15, 1-25)	33993
3	Ladder (dimension V = 23′–7¾″), includes Top Braces, Spacers and Bolts as shown, for Ladder Complete Fig. 3a	33985
3a	Ladder Complete, for One Arm Top of Mast Ground Signals shown on Plates H0101 and H0107 Fig. A to Fig. E inclusive. Includes Hand Rail, Platform, Stays, Clamps and Bolts. (1-3, 1-11, 1-15, 1-27, 1-34, 1-35)	33981
3b	as above, except with Foundation Fig. 42	
4	Ladder (dimension V = 30′–5¾″), includes Top Braces, Spacers and Bolts as shown, for Ladders Complete Fig. 4a and Fig. 4c	
4a	Ladder Complete, for High One Arm Top of Mast Ground Signals shown on Plates H0101 and H0107 Fig. F to Fig. K inclusive. Includes Hand Rail, Platform, Stays, Clamps and Bolts. (1–4, 1-11, 1-15, 1-28, 1-34, 1-35, 1-36)	34381
4b	as above, except with Foundation Fig. 42	
4c	Ladder Complete, for Two Arm Top of Mast Ground Signals shown on Plates H0111, H0112 and H0117 Fig. A to Fig. E inclusive. Includes Hand Rails, Platforms, Stays, Clamps and Bolts. (1-4, 1-11, 1-13, 1-15, 1-17, 1-34, 1-35, 1-36).	33982
4d	as above, except with Foundation Fig. 42	

GENERAL RAILWAY SIGNAL COMPANY March 1916

Ladders and Ladder Parts

Drawing references are shown for convenience in checking shipping lists and invoices.

Fig. No.	Name	Drawing Reference
	Order by plate, figure number and name	
5	Ladder (dimension V = 36′–5¾″), includes Top Braces, Spacers and Bolts as shown, for Ladders Complete Fig. 5a and Fig. 5c	
5a	Ladder Complete, for High Two Arm Top of Mast Ground Signals shown on Plates H0111, H0112 and H0117 Fig. F to Fig. K inclusive. Includes Hand Rails, Platforms, Stays, Clamps and Bolts. (1-5, 1-11, 1-13, 1-15, 1-16, 1-30, 1-35, 1-36, 1-38)	41919
5b	as above, except with Foundation Fig. 42	
5c	Ladder Complete, for Three Arm Top of Mast Ground Signals shown on Plate H0121. Includes Hand Rails, Platforms, Stays, Clamps and Bolts. (1-5, 1-11, 1-13, 1-14, 1-15, 1-16, 1-18, 1-35, 1-36, 1-38)	33983
5d	as above, except with Foundation Fig. 42	
6	Ladder (dimension W = 10′–0″), for Ladder Complete Fig. 6a.	44582
6a	Ladder Complete, for One Arm Base of Mast Bracket or Bridge Signals shown on Plates H0401 and H0407 Fig. A to Fig. C inclusive. Includes Top Pieces, Stays, Clamps and Bolts. (1-6, 1-20, 1-41)	42000
7	Ladder (dimension W = 16′–0″), for Ladder Complete Fig. 7a.	44583
7a	Ladder Complete, for High One Arm and Two Arm Base of Mast Bracket or Bridge Signals shown on Plate H0401 Fig. D to Fig. F inclusive, Plate H0411 Fig. A to Fig. F inclusive and Plate H0421 Fig. A to Fig. C inclusive. Includes Top Pieces, Stays, Clamps and Bolts. (1-7, 1-19, 1-22, 1-41)	42001
8	Ladder (dimension W = 23′–8″), for Ladder Complete Fig. 8a.	42004
8a	Ladder Complete, for One Arm Base of Mast Ground Signals shown on Plates H0201 and H0207. Includes Top Pieces, Stays, Clamps and Bolts. (1-8, 1-20, 1-22, 1-41)	42008
8b	as above, except with Foundation Fig. 42	
9	Ladder (dimension W = 30′–6″), for Ladders Complete Fig. 9a and Fig. 9c	

March 1916 GENERAL RAILWAY SIGNAL COMPANY

Ladders and Ladder Parts

Drawing references are shown for convenience in checking shipping lists and invoices.

Fig. No.	Name	Drawing Reference
	Order by plate, figure number and name	
9a	Ladder Complete, for High One Arm Base of Mast Ground Signals shown on Plates H0202 and H0208. Includes Top Pieces, Stays, Clamps and Bolts. (1-9, 1-20, 1-21, 1-23, 1-41)	
9b	as above, except with Foundation Fig. 42	
9c	Ladder Complete, for Two Arm Ground Signals shown on Plate H0211, H0213 and H0221. Includes Top Pieces, Stays, Clamps and Bolts. (1-9, 1-20, 1-22, 1-24, 1-41)	42007
9d	as above, except with Foundation Fig. 42	
10	Ladder (dimension W = 36′–6″), for Ladder Complete Fig. 10a.	
10a	Ladder Complete for High Two Arm Base of Mast Ground Signals shown on Plates H0212, H0214 and H0222. Includes Top Pieces, Stays, Clamps and Bolts. (1-10, 1-20, 1-22, 1-24, 1-26, 1-41)	42002
10b	as above, except with Foundation Fig. 42	
11	Top Hand Rail Complete as shown (2′–9″ or 3′–0″ center of mast to center of ladder), includes Bolts and Clamp for 5″ pipe	
12	Second Hand Rail Complete (dimension Y = 3′–0″), includes Bolts and Clamp for 5″ pipe	
13	Second Hand Rail Complete as shown (dimension Y = 3′–4″), includes Bolts and Clamp for 5″ pipe	
14	Third Hand Rail Complete (dimension Y = 3′–10″), includes Bolts and Clamp for 5″ pipe	
15	Top Platform Complete as shown (dimension X = 3′–0″), includes Bolts and Clamp for 5″ pipe	
16	Second Platform Complete (dimension X = 3′–7″), includes Bolts and Clamps for 5″ pipe	
17	Second Platform Complete (dimension X = 3′–7″), includes Bolts and Clamp for swaged joint on 5″ and 6″ pipe	
18	Third Platform Complete (dimension X = 4′–1″), includes Bolts and Clamp for swaged joint on 5″ and 6″ pipe	

GENERAL RAILWAY SIGNAL COMPANY March 1916

Ladders and Ladder Parts

Drawing references are shown for convenience in checking shipping lists and invoices.

Fig. No.	Name	Drawing Reference
	Order by plate, figure number and name	
19	Stay Complete as shown (dimension Z = 1′–3⅞″), includes Bolts and Clamp for 5″ pipe	
20	same as Fig. 19, except dimension Z = 1′–5″	
21	same as Fig. 19, except dimension Z = 2′–0″	
22	same as Fig. 19, except dimension Z = 2′–1″	
23	same as Fig. 19, except dimension Z = 2′–7¼″	
24	same as Fig. 19, except dimension Z = 2′–8″	
25	same as Fig. 19, except dimension Z = 3′–0″	
26	same as Fig. 19, except dimension Z = 3′–2″	
27	same as Fig. 19, except dimension Z = 3′–3½″	
28	same as Fig. 19, except dimension Z = 3′–4″	
29	same as Fig. 19, except dimension Z = 3′–7½″	
30	same as Fig. 19, except dimension Z = 3′–9½″	
31	Stay Complete (dimension Z = 2′–5⅞″), includes Bolts and Clamp for 6″ pipe	
32	same as Fig. 31, except dimension Z = 3′–0¾″	
33	same as Fig. 31, except dimension Z = 3′–7⅝″	
34	same as Fig. 31, except dimension Z = 3′–9½″	
35	same as Fig. 31, except dimension Z = 4′–3½″	
36	same as Fig. 31, except dimension Z = 4′–9½″	
37	same as Fig. 31, except dimension Z = 4′–11½″	
38	same as Fig. 31, except dimension Z = 5′–3¼″	
39	same as Fig. 31, except dimension Z = 5′–5½″	
40	same as Fig. 31, except dimesnion Z = 5′–9¼″	
41	Top Piece Complete as shown, for Ladders Fig. 6 to Fig. 10b inclusive. Includes Bolts and Clamp for 5″ pipe	
42	Ladder Foundation, includes two ½″ x 1½″ sq. hd. Bolts with sq. Nuts. R. S. A. Std	
42a	Ladder Foundation only. R. S. A. Std	36773
43	Brace, for top of Ladders	
44	Spacer, 2¼″ long, for top of Ladders	33984
45	Spacer, 8″ long, for top of Ladders	33980
46	Clamp, for 5″ pipe, two pieces, with two ½″ x 1¾″ sq. hd. Bolts with sq. Nuts	33495

March 1916 GENERAL RAILWAY SIGNAL COMPANY

Ladders and Ladder Parts

Drawing references are shown for convenience in checking shipping lists and invoices.

Fig. No.	Name	Drawing Reference
	Order by plate, figure number and name	
47	Clamp, for 6″ pipe, two pieces, with two ½″ x 1¾″ sq. hd. Bolts with sq. Nuts	33496
48	Clamp, for swaged joint on 5″ and 6″ pipe, two pieces with two ½″ x 1¾″ sq. hd. Bolts with sq. Nuts	33501
49	Bolt, ½″ x 1″ sq. hd. with sq. Nut, for Ladders	09
50	Bolt, ½″ x 14½″ sq. hd. with sq. Nut, for top of Ladders Fig. 1 to Fig. 5d inclusive	34258
51	Bolt, ½″ x 1¾″ sq. hd. with sq. Nut, for Clamps	0390
52	Bolt, ½″ x 1½″ sq. hd. with sq. Nut, for Ladder Foundation Fig. 42	010

Memoranda

Memoranda

PLATE H1705

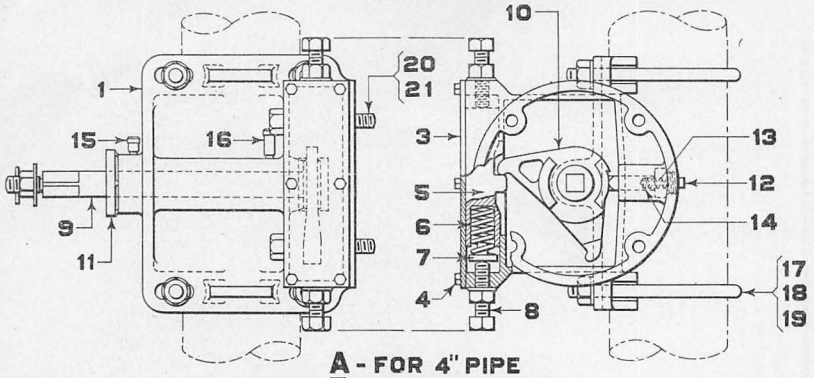

A - FOR 4" PIPE
B - FOR 5" PIPE
C - FOR 6" PIPE

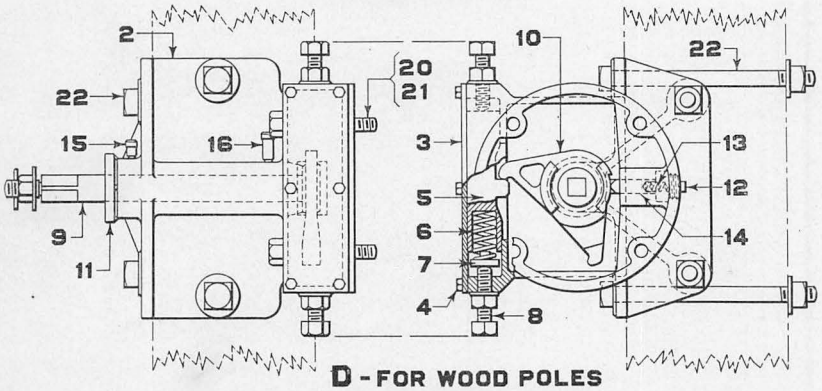

D - FOR WOOD POLES

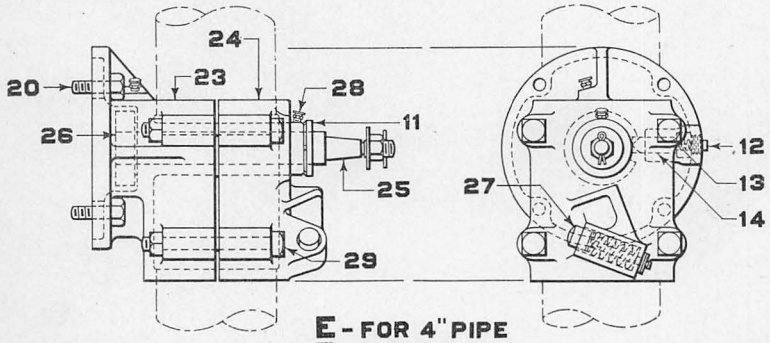

E - FOR 4" PIPE
F - FOR 5" PIPE

Bearings

March 1916 GENERAL RAILWAY SIGNAL COMPANY

Bearings

Drawing references are shown for convenience in checking shipping lists and invoices.

Fig. No.	Name	Drawing Reference
	Order by plate, figure number and name	
A	Clamp Bearing Complete as shown, for 4″ pipe. For use with Model 2A Top of Mast Signal Mechanism. Includes Shaft, Buffer Stop and Tap Bolts for fastening Signal Mechanism. Specify Spectacle to be used so that proper Shaft may be furnished. See Part 18 of this Section for Spectacles	34603
B	same as Fig. A, except for 5″ pipe	
C	same as Fig. A, except for 6″ pipe	
D	Bearing Complete as shown. For use with Model 2A Signal Mechanism on square wood Poles. Includes Shaft, Buffer Stop and four Bolts Fig. 22 for fastening Bearing to 6″ square Pole. Specify Spectacle to be used so that proper Shaft may be furnished. See Part 18 of this Section for Spectacles	44500
E	Clamp Bearing Complete as shown, for 4″ pipe. Used in connection with Spectacle shown on Plate H1808 Fig. E. Includes Shaft and Buffer Stop	
F	same as Fig. E, except for 5″ pipe	34283
1	Bearing only, for Figs. A, B and C, for Upper Quadrant Signals	34670
1a	Bearing only, for Figs. A, B and C, for Lower Quadrant Signals	
2	Bearing only, for Fig. D, for Upper Quadrant Signals	44501
2a	Bearing only, for Fig. D, for Lower Quadrant Signals	
3	Plate, for Bearings Figs. A, B, C and D	34673
4	Tap Bolt, $\frac{5}{16}$″ x $\frac{3}{4}$″ hex. hd., for fastening Plate Fig. 3 to Bearings.	0844
5	Plunger, for Buffer Stop on Bearings Figs. A, B, C and D	34671
6	Spring, for Plunger Fig. 5	30982
7	Filler, for Spring Fig. 6	34674
8	Tap Bolt, $\frac{5}{8}$″ x $2\frac{1}{4}$″ hex. hd. with hex. Nut, for Buffer Stop on Bearings Figs. A, B, C and D	
9	Shaft Complete, for Bearings Figs. A, B, C and D. Includes Nut, Washer and Cotter Pin. Specify Spectacle to be used. See Part 18 of this Section for Spectacles	
9a	Shaft only, for Fig. 9	
10	Shaft Driver, for Shaft Fig. 9	34672

GENERAL RAILWAY SIGNAL COMPANY March 1916

Bearings

Drawing references are shown for convenience in checking shipping lists and invoices.

Fig. No.	Name	Drawing Reference
	Order by plate, figure number and name	
11	Retaining Cap, for Bearings Figs. A, B, C, D, E and F	35129
12	Pipe Plug, 1″, for Spring Fig. 13	0888
13	Spring, for Lock Dog Fig. 14	6944
14	Lock Dog, for Bearings Figs. A, B, C, D, E and F	29913
15	Oiler, for Bearings Figs. A, B, C and D	39886
16	Oiler, for Bearings Figs. A, B, C and D	44793
17	U Bolt Complete, for 4″ pipe, for Bearing Fig. A. Includes hex. Nuts and Washers	
18	U Bolt Complete, for 5″ pipe, for Bearing Fig. B. Includes hex. Nuts and Washers	
19	U Bolt Complete, for 6″ pipe, for Bearing Fig. C. Includes hex. Nuts and Washers	
20	Tap Bolt, $\frac{5}{8}$″ x $1\frac{3}{4}$″ hex. hd., for fastening Signal Mechanism to Bearings Figs. A, B, C, D, E and F	0664
21	Tap Bolt, $\frac{5}{8}$″ x 4″ hex. hd., for fastening Signal Mechanism to Bearings Figs. A, B, C and D	34675
22	Bolt, $\frac{5}{8}$″ x $7\frac{1}{2}$″ sq. hd. with sq. Nut and Washer, for fastening Bearing Fig. D to 6″ square Pole	
23	Bearing only, back half, for 5″ pipe, for Fig. F	34285
23a	as above, except with Filler for 4″ pipe, for Fig. E	
24	Bearing only, front half, for 5″ pipe, for Fig. F	34284
24a	as above, except with Filler for 4″ pipe, for Fig. E	
25	Shaft Complete, for Bearings Figs. E and F and Spectacle shown on Plate H1808 Fig. E. Includes hex. Nut, Washer and Cotter Pin	
25a	Shaft only, for Fig. 25	34291
26	Shaft Driver, for Shaft Fig. 25	29910
27	Buffer Stop Complete, for Bearings Figs. E and F. Includes Plunger, Spring, Washers and Cotter Pin	
28	Oiler, for Bearings Figs. E and F	32418
29	Bolt, $\frac{5}{8}$″ x 6″ sq. hd. with hex. Nut, for Bearings Figs. E and F.	34331

Memoranda

PLATE H1706

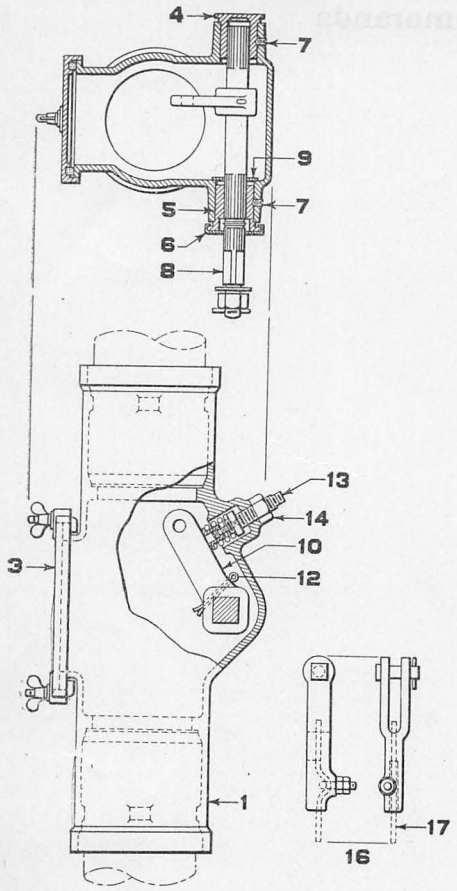

A—UPPER QUADRANT
FOR 5" PIPE

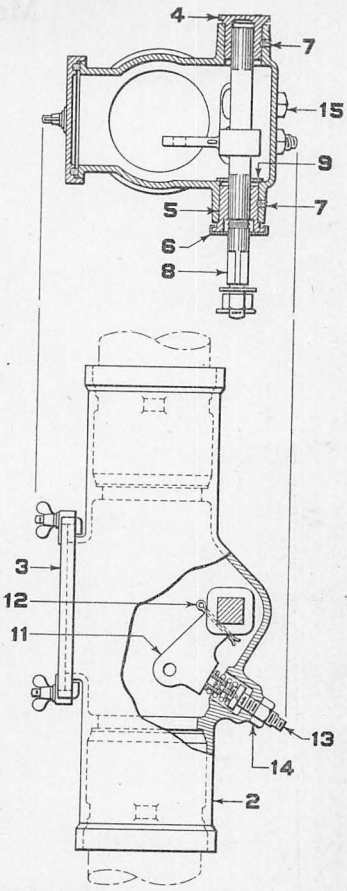

B—LOWER QUADRANT
FOR 5" PIPE

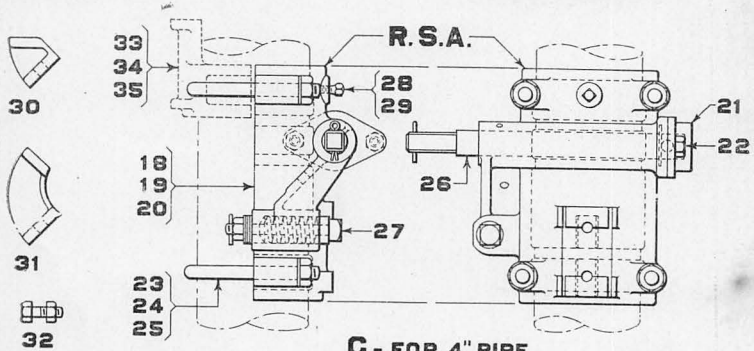

C - FOR 4" PIPE
D - FOR 5" PIPE
E - FOR 6" PIPE

Bearings

Bearings

Drawing references are shown for convenience in checking shipping lists and invoices.

Fig. No.	Name	Drawing Reference
	Order by plate, figure number and name	
A	Bearing Complete as shown, for 5″ pipe. For use with Model 2A Upper Quadrant Base of Mast Signal Mechanism. Specify Spectacle to be used so that proper Shaft may be furnished and if for Two Arm Signal specify whether for upper or lower Arm. See Part 18 of this Section for Spectacles	40647
B	Bearing Complete as shown, for 5″ pipe. For use with Model 2A Lower Quadrant Base of Mast Signal Mechanism. Specify Spectacle to be used so that proper Shaft may be furnished and if for Two Arm Signal specify whether for upper or lower Arm. See Part 18 of this Section for Spectacles	
C	Bearing Complete as shown, for 4″ pipe. For use on mechanically operated Arms. Includes two U Bolts, Buffer Stop and Shaft for R. S. A. Spectacle. R. S. A. Type	
C1	as above, except with Clamp Fig. 33 and two $\frac{3}{4}$″ x $5\frac{3}{4}$″ sq. hd. Bolts with hex. Nuts in place of one U Bolt Fig. 23.	
D	Bearing Complete as shown, for 5″ pipe. For use on mechanically operated Arms. Includes two U Bolts, Buffer Stop and Shaft for R. S. A. Spectacle. R. S. A. Std.	
D1	as above, except with Clamp Fig. 34 and two $\frac{3}{4}$″ x $5\frac{3}{4}$″ sq. hd. Bolts with hex. Nuts in place of one U Bolt Fig. 24.	
E	Bearing Complete as shown, for 6″ pipe. For use on mechanically operated Arms. Includes two U Bolts, Buffer Stop and Shaft for R. S. A. Spectacle. R. S. A. Type	49070
E1	as above, except with Clamp Fig. 35 and two $\frac{3}{4}$″ x $6\frac{1}{2}$″ sq. hd. Bolts with hex. Nuts in place of one U Bolt Fig. 25	
1	Bearing for Fig. A, includes Bushings, Cap and Set Screws. (1-1a, 1-4, 1-5, 1-6, 2-7)	
1a	Bearing only, for Fig. 1	40648

GENERAL RAILWAY SIGNAL COMPANY March 1916

Bearings

Drawing references are shown for convenience in checking shipping lists and invoices.

Fig. No.	Name	Drawing Reference
	Order by plate, figure number and name	
2	Bearing, for Fig. B, includes Bushings, Cap and Set Screws. (1-2a, 1-4, 1-5, 1-6, 2-7)	
2a	Bearing only, for Fig. 2	
3	Cover, for Figs. A and B, includes Gasket, Hook Bolt, Thumb Nut and Washer	47424
4	Bushing, for back end of Bearings Figs. 1 and 2	36072
5	Bushing, for Spectacle end of Bearings Figs. 1 and 2	36071
6	Cap, for Bushing Fig. 5	35661
7	Set Screw, $\frac{3}{8}''$ x $\frac{1}{2}''$ headless, for holding Bushings Figs. 4 and 5 to Bearings Figs. 1 and 2	34495
8	Shaft Complete, for Bearings Figs. A and B. Includes Nut, Washer and Cotter Pin. Specify Spectacle to be used. See Part 18 of this Section for Spectacles	
8a	Shaft only, for Fig. 8	
9	Washer, for Shaft	0381
10	Operating Crank, for Bearing Fig. A, for Upper Quadrant Signals	40650
11	Operating Crank, for Bearing Fig. B, for Lower Quadrant Signals	40649
12	Cotter Pin, $\frac{1}{4}''$ x $2\frac{1}{4}''$, for fastening Cranks Figs. 10 and 11 to Shaft	0693
13	Buffer Stop Complete, for Bearings Figs. A and B. Includes Stud, Plunger, Spring, Screw, Nut and Washer	36073
13a	as above, except with Nut Fig. 14	
14	Nut, $\frac{3}{4}''$ hex., for Buffer Stop Fig. 13	646
15	Tap Bolt, $\frac{3}{4}''$ x $1\frac{1}{2}''$, hex. hd., used in place of Buffer Stop Fig. 13	0591
16	Jaw Complete as shown, for Upper Quadrant Signals, includes Jaw Pin, Cotter, Hook Bolt and Nuts	40653
16a	Jaw Pin, $\frac{5}{8}''$ x $1\frac{13}{16}''$, for Jaw Complete Fig. 16	8237
16b	Hook Bolt, with two hex. Nuts, for Jaw Complete Fig. 16	
17	Operating Wire, for Upper Quadrant Signals. Price per foot	
18	Bearing only, for 4″ pipe, for Figs. C and C1. R. S. A. Type	47096
19	Bearing only, for 5″ pipe, for Figs. D and D1. R. S. A. Std.	47095
20	Bearing only, for 6″ pipe, for Figs. E and E1. R. S. A. Type	49069

March 1916 GENERAL RAILWAY SIGNAL COMPANY

Bearings

Drawing references are shown for convenience in checking shipping lists and invoices.

Fig. No.	Name	Drawing Reference
	Order by plate, figure number and name	
21	Cap, for Bearings Fig. C to Fig. E1 inclusive	47091
22	Tap Bolt, $\frac{1}{2}''$ x 1″ hex. hd., for fastening Cap Fig. 21 to Bearings Figs 18, 19 and 20	0391
23	U Bolt Complete for 4″ pipe, for Bearings Complete Figs. C and C1. Includes hex. Nuts and Lock Washers	43744
24	U Bolt Complete for 5″ pipe, for Bearings Figs. D and D1. Includes hex. Nuts and Lock Washers	43741
25	U Bolt Complete for 6″ pipe, for Bearings Figs. E and E1. Includes hex. Nuts and Lock Washers	43743
26	Shaft Complete, for Bearings Fig. C to Fig. E1 inclusive. Includes Washer, Pin and Cotter	47088
27	Buffer Stop Complete, for Bearings Fig. C to Fig. E1 inclusive. Includes Plunger, Collar, Spring, Washers and Cotter Pin.	
28	Set Screw, $\frac{1}{2}''$ x 2″ sq. hd., for Bearings Figs. C and C1	44568
29	Set Screw, $\frac{1}{2}''$ x $1\frac{1}{4}''$ sq. hd., for Bearings Figs. D, D1, E and E1.	39066
30	Filler Block, used with Spectacles operating from 0° to 45° and for Fixed Arm at 45°	36774
31	Filler Block, used for fixed Arm at 0°	36775
32	Bolt, $\frac{1}{2}''$ x $1\frac{1}{2}''$ hex. hd. with hex. Nut, for fastening Filler Blocks Figs. 30 and 31 to Bearings Figs. 18, 19 and 20	078
33	Clamp, for 4″ pipe, R. S. A. Type	38222
34	Clamp, for 5″ pipe, R. S. A. Std	35654
35	Clamp, for 6″ pipe, R. S. A. Type	41891

Memoranda

Memoranda

PLATE H1711

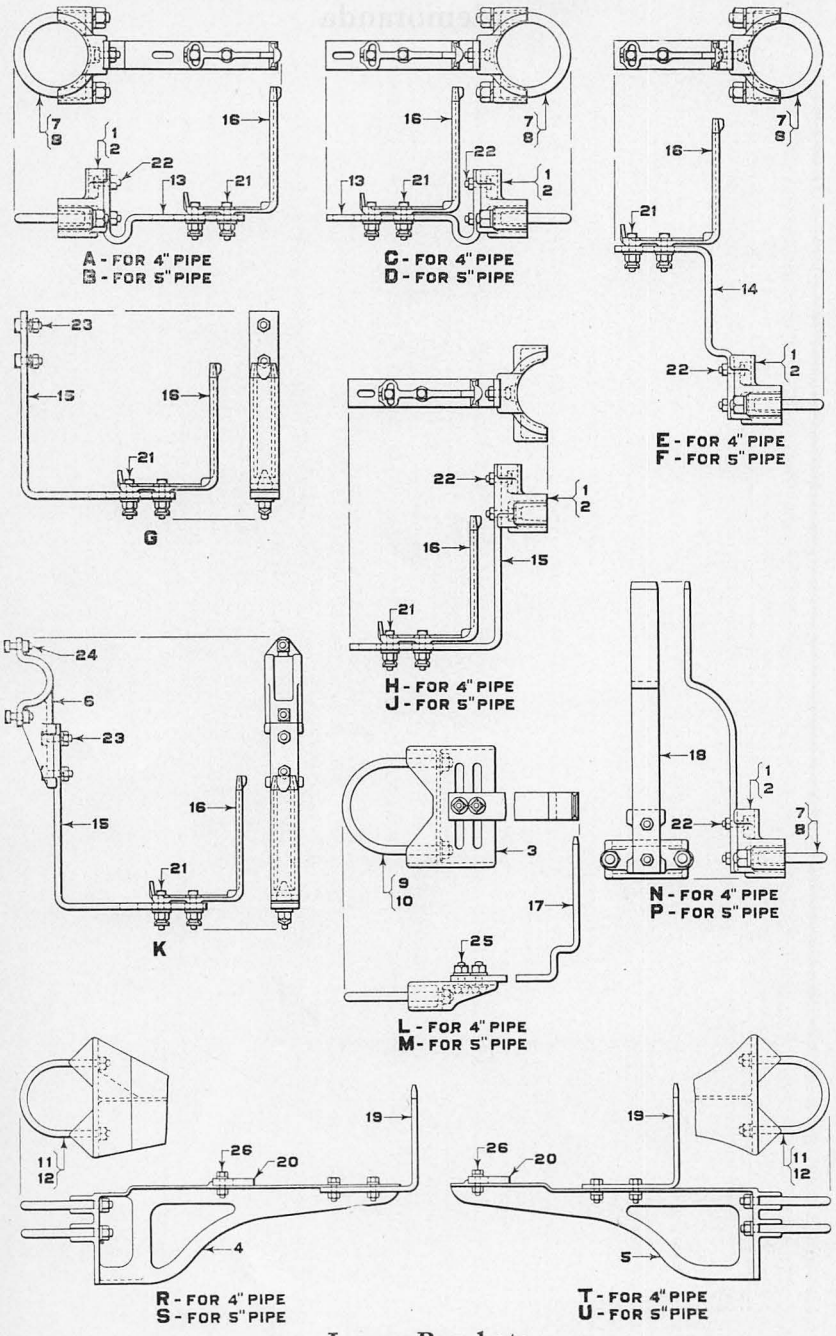

Lamp Brackets

March 1916 GENERAL RAILWAY SIGNAL COMPANY

Lamp Brackets

Drawing references are shown for convenience in checking shipping lists and invoices.

Fig. No.	Name	Drawing Reference
	Order by plate, figure number and name	
A	Lamp Bracket Complete as shown, for 4″ pipe. Used with Spectacles shown on Plate H1801 Figs. A, A1, B, B1, C, C1, D, D1, J and P, also used for Marker Lights. R. S. A. Type. (1-1, 1-7, 1-13, 1-16, 2-21, 2-22)	38221
B	same as Fig. A, except for 5″ pipe. (1-2, 1-8, 1-13, 1-16, 2-21, 2-22)	35651
C	Lamp Bracket Complete as shown, for 4″ pipe. Used for Staggered Marker Lights. R. S. A. Type. (1-1, 1-7, 1-13, 1-16, 2-21, 2-22)	
D	same as Fig. C, except for 5″ pipe. (1-2, 1-8, 1-13, 1-16, 2-21, 2–22)	
E	Lamp Bracket Complete as shown, for 4″ pipe. Used with Staggered Light Spectacles shown on Plate H1801 Figs. E, F, G and H. R. S. A. Type. (1-1, 1-7, 1-14, 1-16, 2-21, 2-22)	
E1	as above, except used with Lower Quadrant Spectacle shown on Plate H1808 Fig. E and Bearing shown on Plate H1705 Fig. E. (1-1, 1-7, 1-14a, 1-16, 2-21, 2-22)	
F	Lamp Bracket Complete as shown, for 5″ pipe. Used with Staggered Light Spectacles shown on Plate H1801 Figs. E, F, G and H. R. S. A. Type. (1-2, 1-8, 1-14, 1-16, 2-21, 2-22)	42478
F1	as above, except used with Lower Quadrant Spectacle shown on Plate H1808 Fig. E and Bearing shown on Plate H1705 Fig. F. (1-2, 1-8, 1-14a, 1-16, 2-21, 2-22)	
G	Lamp Bracket Complete as shown. Used with Spectacles shown on Plate H1808 Figs. C, C1, D and D1 and R. S. A. Bearings shown on Plate H1706 Figs. C, C1, D, D1, E and E1. R. S. A. Std. (1-15, 1-16, 2-21, 2-23)	43679

GENERAL RAILWAY SIGNAL COMPANY March 1916

Lamp Brackets

Drawing references are shown for convenience in checking shipping lists and invoices.

Fig. No.	Name	Drawing Reference
	Order by plate, figure number and name	
H	Lamp Bracket Complete as shown, for 4″ pipe. Used with Spectacles shown on Plate H1801 Figs. F and G and R. S. A. Bearings shown on Plate H1706 Figs. C and C1. R. S. A. Type. (1-1, 1-15, 1-16, 2-21, 2-22)	
J	same as Fig. H, except for 5″ pipe. Used also with Spectacle shown on Plate H1801 Fig. H. R. S. A. Std. (1-2, 1-15, 1-16, 2-21, 2-22)	43740
J1	as above, except without Clamp Fig. 2	
K	Lamp Bracket Complete as shown. Used with Spectacles shown on Plate H1801 Figs. A, A1, B, B1, C, C1, D, D1, P and Bearings shown on Plate H1705 Figs. A, B, C and D. R. S. A. Type. (1-6, 1-15, 1-16, 2-21, 2-23, 2-24)	
L	Lamp Bracket Complete as shown, for 4″ pipe. Used with Spectacles shown on Plate H1801 Figs. A, A1, B, B1, C, C1, D, D1, J and P. (1-3, 1-9, 1-17, 2-25)	
M	same as Fig. L, except for 5″ pipe. (1-3, 1-10, 1-17, 2-25).	
N	Lamp Bracket Complete as shown, for 4″ pipe. Used with Lower Quadrant Spectacles shown on Plate H1808 Figs. A, B, C and D. (1-1, 1-7, 1-18, 2-22)	
P	same as Fig. N, except for 5″ pipe. (1-2, 1-8, 1-18, 2-22)	48022
R	Lamp Bracket Complete as shown, for 4″ pipe. Used with Spectacles shown on Plate H1801 Figs. K, M and M1. (1-4, 1-11, 1-19, 1-20, 3-26)	
S	same as Fig. R, except for 5″ pipe. (1-4, 1-12, 1-19, 1-20, 3-26)	
T	Lamp Bracket Complete as shown, for 4″ pipe. Used with Staggered Light Spectacle shown on Plate H1801 Fig. N. (1-5, 1-11, 1-19, 1-20, 3-26)	
U	same as Fig. T, except for 5″ pipe. (1-5, 1-12, 1-19, 1-20, 3-26)	
1	Clamp, for 4″ pipe. R. S. A. Type	38222
2	Clamp, for 5″ pipe. R. S. A. Std.	35654
3	Clamp Bracket, for Lamp Bracket Complete Figs. L and M.	34726

March 1916 GENERAL RAILWAY SIGNAL COMPANY

Lamp Brackets

Drawing references are shown for convenience in checking shipping lists and invoices.

Fig. No.	Name	Drawing Reference
	Order by plate, figure number and name	
4	Clamp Bracket, for Lamp Brackets Complete Figs. R. and S.	32972
5	Clamp Bracket, for Lamp Bracket Complete Figs. T and U.	44929
6	Adapter, for Lamp Bracket Compiete Fig. K.	47829
6a	as above, except with two Bolts Fig. 24.	47828
7	U Bolt Complete for 4″ pipe, for Lamp Brackets Complete Figs. A, C, E, E1 and N. Includes hex. Nuts and Lock Washers.	43742
8	U Bolt Complete, for 5″ pipe, for Lamp Brackets Complete Figs. B, D, F, F1 and P. Includes hex. Nuts and Lock Washers.	43741
9	U Bolt Complete for 4″ pipe, for Lamp Bracket Complete Fig. L. Includes hex. Nuts and Washers.	
10	U Bolt Complete, for 5″ pipe, for Lamp Bracket Complete Fig. M. Includes hex. Nuts and Washers.	
11	U Bolt Complete, for 4″ pipe, for Lamp Brackets Complete Figs. R and T. Includes hex. Nuts and Washers.	
12	U Bolt Complete, for 5″ pipe, for Lamp Brackets Complete Figs. S and U. Includes hex. Nuts and Washers.	
13	Support, for Lamp Brackets Complete Figs. A, B, C, and D.	35655
14	Support, for Lamp Brackets Complete Figs. E and F.	42479
14a	Support, for Lamp Brackets Complete Figs. E1 and F1.	
15	Support, for Lamp Brackets Complete Figs. G, H, J and K. R. S. A. Std.	43745
16	Lamp Bracket only. R. S. A. Std.	35656
17	Lamp Bracket only, for Figs. L and M.	30560
18	Lamp Bracket only, for Figs. N and P.	48023
19	Lamp Bracket only, for Figss. R, S, T and U.	32973
20	Clip, for Lamp Brackets Complete Figs. S, T, U and V.	32974
21	Bolt, $\frac{1}{2}$″ x 2″ sq. hd. with hex. Nut, Washer and Grip Nut, for fastening Lamp Bracket Fig. 16 to Support.	

GENERAL RAILWAY SIGNAL COMPANY March 1916

Lamp Brackets

Drawing references are shown for convenience in checking shipping lists and invoices.

Fig. No.	Name	Drawing Reference
	Order by plate, figure number and name	
22	Bolt, $\frac{1}{2}''$ x $1\frac{1}{4}''$ sq. hd. with hex. Nut, for fastening Supports Figs. 13, 14, 15 and 18 to Clamps	39147
23	Bolt, $\frac{1}{2}''$ x $1\frac{1}{2}''$ sq. hd. with hex. Nut and Lock Washer, for fastening Support Fig. 15 to Bearing and also to Adapter Fig. 6	
24	Bolt, $\frac{1}{2}''$ x $1\frac{1}{4}''$ sq. hd. with sq. Nut, for fastening Adapter Fig. 6 to Bearing	077
25	Bolt, $\frac{1}{2}''$ x $1\frac{1}{2}''$ sq. hd. with sq. Nut and Washer, for fastening Lamp Bracket Fig. 17 to Clamp Bracket Fig. 3	
26	Bolt, $\frac{3}{8}''$ x $1\frac{1}{4}''$ hex. hd. with hex. Nut and Washer, for fastening Lamp Bracket Fig. 19 to Clamp Brackets Figs. 4 and 5.	

Memoranda

GENERAL RAILWAY SIGNAL COMPANY March 1916

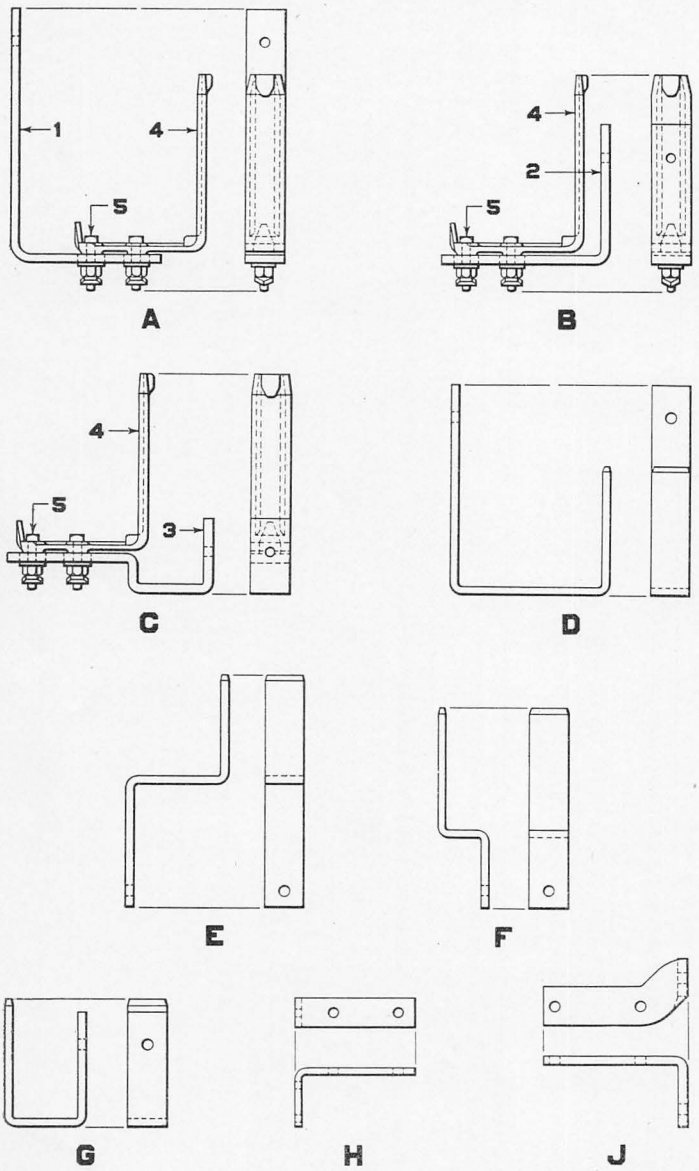

Lamp Brackets

March 1916 GENERAL RAILWAY SIGNAL COMPANY

Lamp Brackets

for Model 2A Dwarf Signals

Drawing references are shown for convenience in checking shipping lists and invoices.

Fig. No.	Name	Drawing Reference
	Order by plate, figure number and name	
A	Lamp Bracket Complete as shown. Used with Spectacles shown on Plate H1812 Figs. A, B, C, D, K and Discs shown on Plate H1816 Figs. B and B1. (1-1, 1-4, 2-5).....	42035
B	Lamp Bracket Complete as shown. Used with Spectacle shown on Plate H1812 Fig. G and Discs shown on Plate H1816 Fig. D. R. S. A. Type. (1-2, 1-4, 2-5).....	43418
C	Lamp Bracket Complete as shown. Used with Spectacles shown on Plate H1812 Figs. J and N. R. S. A. Type. (1-3, 1-4, 2-5).....	42078
D	Lamp Bracket, used with Spectacles shown on Plate H1812 Figs. A, B, C, D, E, K and Disc shown on Plate H1816 Figs. B and B1. Specify Spectacle or Disc and style of Lamp to be used.....	
E	Lamp Bracket for Electric Lamp, used with Disc shown on Plate H1816 Fig. A.....	32733
F	Lamp Bracket, used with Spectacles shown on Plate H1812 Figs. H, J, N, P and Discs shown on Plate H1816 Figs. A and C. Specify Spectacle or Disc and style of Lamp to be used.....	
G	Lamp Bracket, used with Spectacles shown on Plate H1812 Figs. F, G, M and Disc shown on Plate H1816 Fig. D. Specify Spectacle or Disc and style of Lamp to be used..	
H	Lamp Bracket for Electric Lamp, used on Short Horn Dwarf Signal with Spectacles shown on Plate H1812 Figs. N, P and Disc shown on Plate H1816 Fig. C.....	30849
J	Lamp Bracket, for Electric Lamp, used with Spectacles shown on Plate H1812 Figs. J and N.....	46006
1	Support only, for Lamp Bracket Complete Fig. A.....	42034
2	Support only, for Lamp Bracket Complete Fig. B.....	43419
3	Support only, for Lamp Bracket Complete Fig. C.....	42079
4	Lamp Bracket only. R. S. A. Std.....	35656
5	Bolt, $\frac{1}{2}''$ x $2''$ sq. hd. with hex. Nut, Washer and Grip Nut, for fastening Lamp Bracket Fig. 5 to Support.....	

Memoranda

Memoranda

PLATE H1715

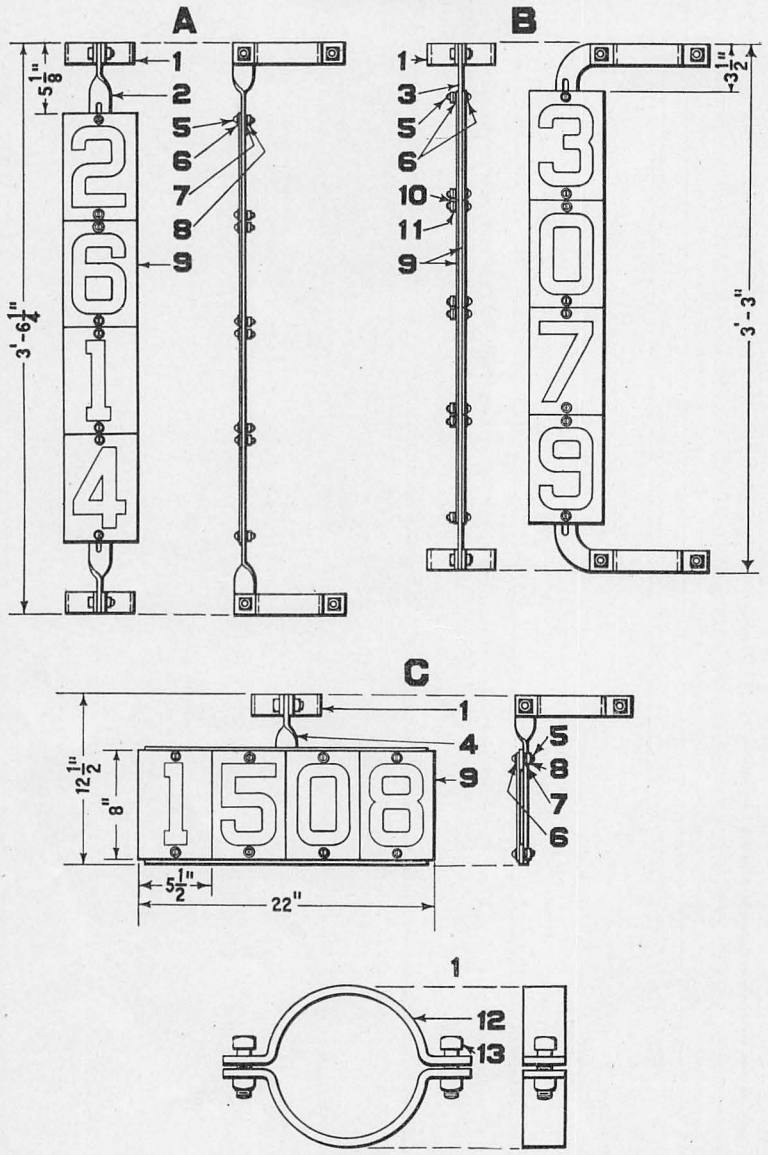

Number Plates for Mounting on Signal Masts

April 1927 GENERAL RAILWAY SIGNAL COMPANY

Number Plates for Mounting on Signal Masts

Note: Number Plates having more than four or less than two figures are not listed but will be furnished when ordered.

Special Number Plates can be furnished in accordance with purchaser's specifications.

All Number Plates are furnished Complete without Clamps. Clamps must be ordered separately. Clamps and Half Clamps for Poles, the sizes of which are not listed in Figs. 1 and 12 respectively, will be furnished when specified.

When ordering specify Numbers or Letters desired.

Unless otherwise specified, Number Plates are furnished made of No. 16 Gauge U. S. S. steel, $5\frac{1}{2}''$ x $8''$, enameled white figure on dark blue enameled background.

Drawing references are shown for convenience in checking shipping lists and invoices.

Fig. No.	Name	Drawing Reference
	Order by plate, figure number and name	
A	Four Figure Vertical Number Plate Complete for front mounting without Clamps. (1-2, 8-5, 8-6, 8-7, 8-8, 4-9)	39750
A1	as above, except Three Figure Number Plate Complete. (1-2a, 6-5, 6-6, 6-7, 6-8, 3-9)	39749
A2	same as Fig. A, except Two Figure Number Plate Complete. (1-2b, 4-5, 4-6, 4-7, 4-8, 2-9)	39748
B	Four Figure Vertical Number Plate Complete with numbers on both sides for side mounting without Clamps. (1-3, 8-5, 16-6, 8-10, 8-11, 8-9)	44502
B1	as above except Three Figure Number Plate Complete. (1-3a, 6-5, 12-6, 6-10, 6-11, 6-9)	
B2	same as Fig. B, except Two Figure Number Plate Complete. (1-3b, 4-5, 8-6, 4-9, 4-10, 4-11)	
C	Four Figure Horizontal Number Plate Complete without Clamps. (1-4, 8-5, 8-6, 8-7, 8-8, 4-9)	39761
C1	as above, except Three Figure Number Plate Complete. (1-4a, 6-5, 6-6, 6-7, 6-8, 3-9)	39760
C2	same as Fig. C, except Two Figure Number Plate Complete. (1-4b, 4-5, 4-6, 4-7, 4-8, 2-9)	39759

(Continued on following page)

GENERAL RAILWAY SIGNAL COMPANY April 1927

Number Plates for Mounting on Signal Masts

Drawing references are shown for convenience in checking shipping lists and invoices.

Fig. No.	Name	Drawing Reference
	Order by plate, figure number and name	
1	Clamp Complete, includes Bolts and Nuts, as shown for 5″ Pipe	317 Gr 1
1a	as above, except for 6″ Pipe	317 Gr 3
2	Four Figure Vertical Support for Fig. A	39764
2a	as above, except for three figures for Fig. A1	39763
2b	same as Fig. 2, except for two figures for Fig. A2	39762
3	Four Figure Vertical Support for Fig. B	44503
3a	as above, except for three figures for Fig. B1	
3b	same as Fig. 3, except for two figures for Fig. B2	
4	Four Figure Horizontal Support Complete with Cross Bars for Fig. C	39753
4a	as above, except for three figures for Fig. C1	39752
4b	same as Fig. 4, except for two figures for Fig. C2	39751
5	Screw, No. 14-24 x $\frac{3}{4}$″ rd. hd., for fastening Number Plates, Fig. 9 to Supports as shown	50595
6	Washer, $\frac{1}{4}$″ leather, for Screw Fig. 5	4553
7	Washer, $\frac{1}{16}$″ thick, as shown for Screw Fig. 5	19680
8	Nut, No. 14-24 x $\frac{1}{4}$″ thick square, for Screw Fig. 5 as shown	50597
9	Number Plate, $5\frac{1}{2}$″ x 8″, figure or letter as specified. White enameled figure on a dark blue background	39754
10	Nut, No. 14-24 x $\frac{3}{16}$″ thick square, for Screw Fig. 5 as shown	50619
11	Washer, $\frac{1}{32}$″ thick, as shown for Screw Fig. 5	1225
12	Half Clamp as shown for 5″ pipe, for Clamp Fig. 1	318
12a	as above, except for 6″ pipe, for Clamp Fig. 1a	318-2
13	Bolt and Nut, $\frac{1}{2}$″ x $1\frac{3}{4}$″ sq. hd., sq. nut, for Clamp Fig. 12	0390

July 1940 GENERAL RAILWAY SIGNAL COMPANY

The numerals and letters shown on the following pages are intended for identifying switch machines and signals but may be used elsewhere for similar purposes.

The tabulations under each type and size list the characters available, however if other characters are required that are not shown, they will be supplied upon request.

Letters	Ordering Ref.
A	46386-44
B	46386-45
C	46386-46
D	46386-49
E	46386-47
F	46386-50
G	46386-51
H	46386-52
W	46386-48

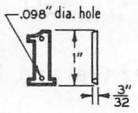

Numerals	Ordering Ref.
1	46386-35
2	46386-36
3	46386-37
4	46386-38
5	46386-39
6	46386-40
7	46386-41
8	46386-42
9	46386-40
0	46386-43

1" High - White Metal Numerals and Letters

Letters	Ordering Ref.
A	46386-9
B	46386-10
C	46386-11
D	46386-12
E	46386-13
L	46386-20
R	46386-26
W	46386-31

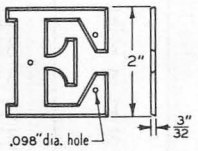

Numerals	Ordering Ref.
1	46386-1
2	46386-2
3	46386-3
4	46386-4
5	46386-5
6	46386-6
7	46386-7
8	46386-8
9	46386-6
0	46386

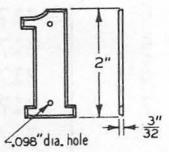

2" High - White Metal Numerals and Letters

File in Catalog E Vol. 2 following Plate H1715

GENERAL RAILWAY SIGNAL COMPANY July 1940

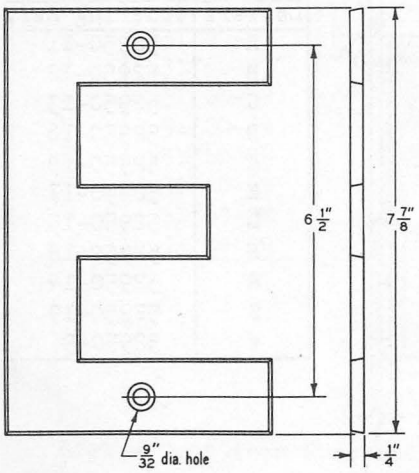

Letters	Ordering Ref.
E	31760-40
F	31760-41
M	31760-42
P	31760-43
S	31760-44
W	31760-45
R	31760-46
N	31760-62

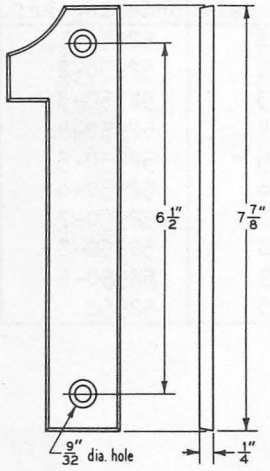

Numerals	Ordering Ref.
1	31760-31
2	31760-32
3	31760-33
4	31760-34
5	31760-35
6	31760-36
7	31760-37
8	31760-38
9	31760-36
0	31760-30

7-7/8" High - Cast Iron Numerals and Letters
Painted White

The numerals and letters shown on the following pages are intended for identifying switch machines and signals but may be used elsewhere for similar purposes.

The tabulations under each type and size list the characters available, however if other characters are required that are not shown, they will be supplied upon request.

Letters	Ordering Ref.
A	46386-44
B	46386-45
C	46386-46
D	46386-49
E	46386-47
F	46386-50
G	46386-51
H	46386-52
W	46386-48

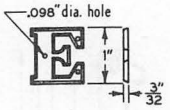

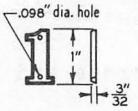

Numerals	Ordering Ref.
1	46386-35
2	46386-36
3	46386-37
4	46386-38
5	46386-39
6	46386-40
7	46386-41
8	46386-42
9	46386-40
0	46386-43

1" High - White Metal Numerals and Letters

Letters	Ordering Ref.
A	46386-9
B	46386-10
C	46386-11
D	46386-12
E	46386-13
L	46386-20
R	46386-26
W	46386-31

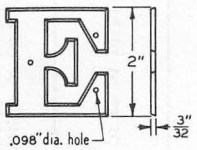

Numerals	Ordering Ref.
1	46386-1
2	46386-2
3	46386-3
4	46386-4
5	46386-5
6	46386-6
7	46386-7
8	46386-8
9	46386-6
0	46386

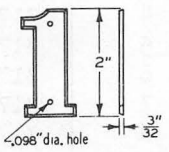

2" High - White Metal Numerals and Letters

File in Catalog E Vol. 2
following Plate H1715

Letters	Ordering Ref.
A	31760-60
B	31760-26
D	31760-84
E	31760-27
C	31760-63
J	31760-23
L	31760-64
N	31760-24
R	31760-25
S	31760-49
W	31760-28
V	31760-29

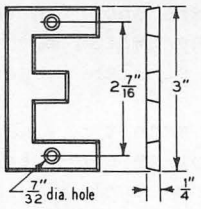

Numerals	Ordering Ref.
1	31760-14
2	31760-15
3	31760-16
4	31760-17
5	31760-18
6	31760-19
7	31760-20
8	31760-21
9	31760-19
0	31760-22

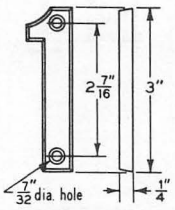

3" High - Cast Iron Numerals and Letters - Painted White

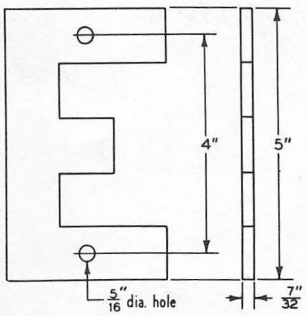

Letters	Ordering Ref.
A	31760-48
B	31760-50
D	31760-13
E	31760-51
F	31760-83
L	31760-12
R	31760-11
W	31760-52

Numerals	Ordering Ref.
1	31760-1
2	31760-2
3	31760-3
4	31760-4
5	31760-5
6	31760-6
7	31760-7
8	31760-8
9	31760-9
0	31760

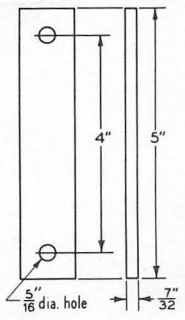

5" High - Cast Iron Numerals and Letters - Painted White

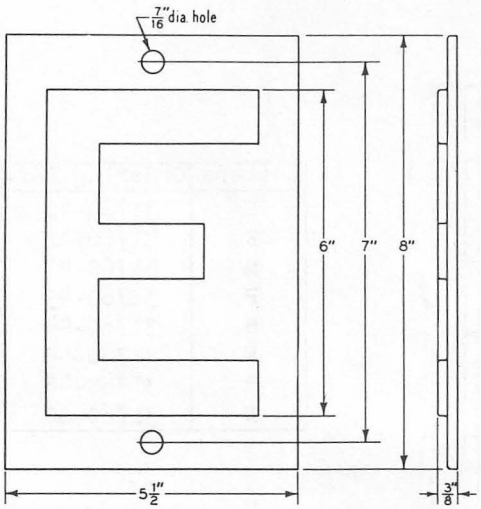

Letters	Ordering Ref.
A	52950-11
B	52950-12
C	52950-13
D	52950-16
E	52950-10
H	52950-17
L	52950-15
N	52950-18
R	52950-14
S	52950-19
W	52950-9

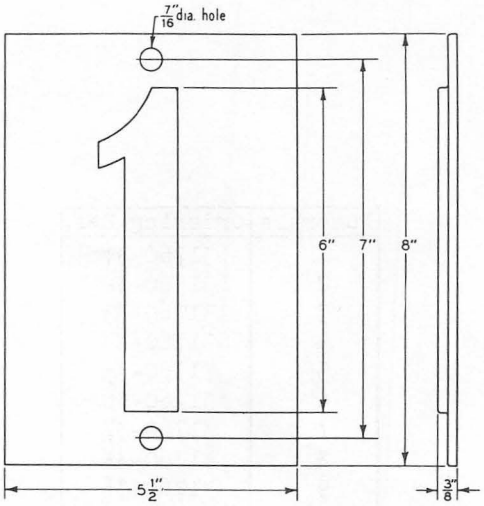

Numerals	Ordering Ref.
1	52950-1
2	52950-2
3	52950-3
4	52950-4
5	52950-5
6	52950-6
7	52950-7
8	52950-8
9	52950-6
0	52950

6" High - Cast Iron Numerals and Letters on Plate.
Background painted black
Numerals and Letters painted white

PLATE H1717

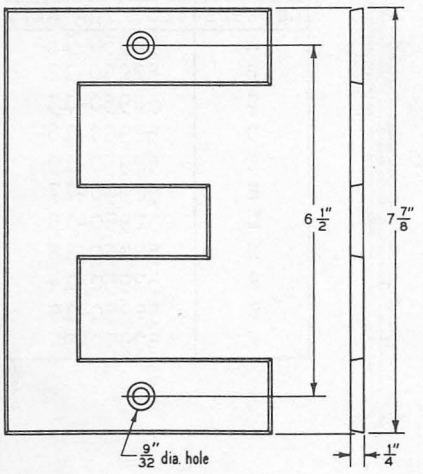

Letters	Ordering Ref.
E	31760-40
F	31760-41
M	31760-42
P	31760-43
S	31760-44
W	31760-45
R	31760-46
N	31760-62

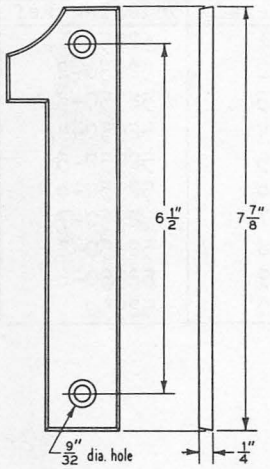

Numerals	Ordering Ref.
1	31760-31
2	31760-32
3	31760-33
4	31760-34
5	31760-35
6	31760-36
7	31760-37
8	31760-38
9	31760-36
0	31760-30

7-7/8" High - Cast Iron Numerals and Letters
Painted White

Section H, Part 18

Supersedes Plates H0127, H0128, H0129, H0130, H0502 and H0503 Dated January 1912

Spectacles, Blades and Roundels

PLATE H1801

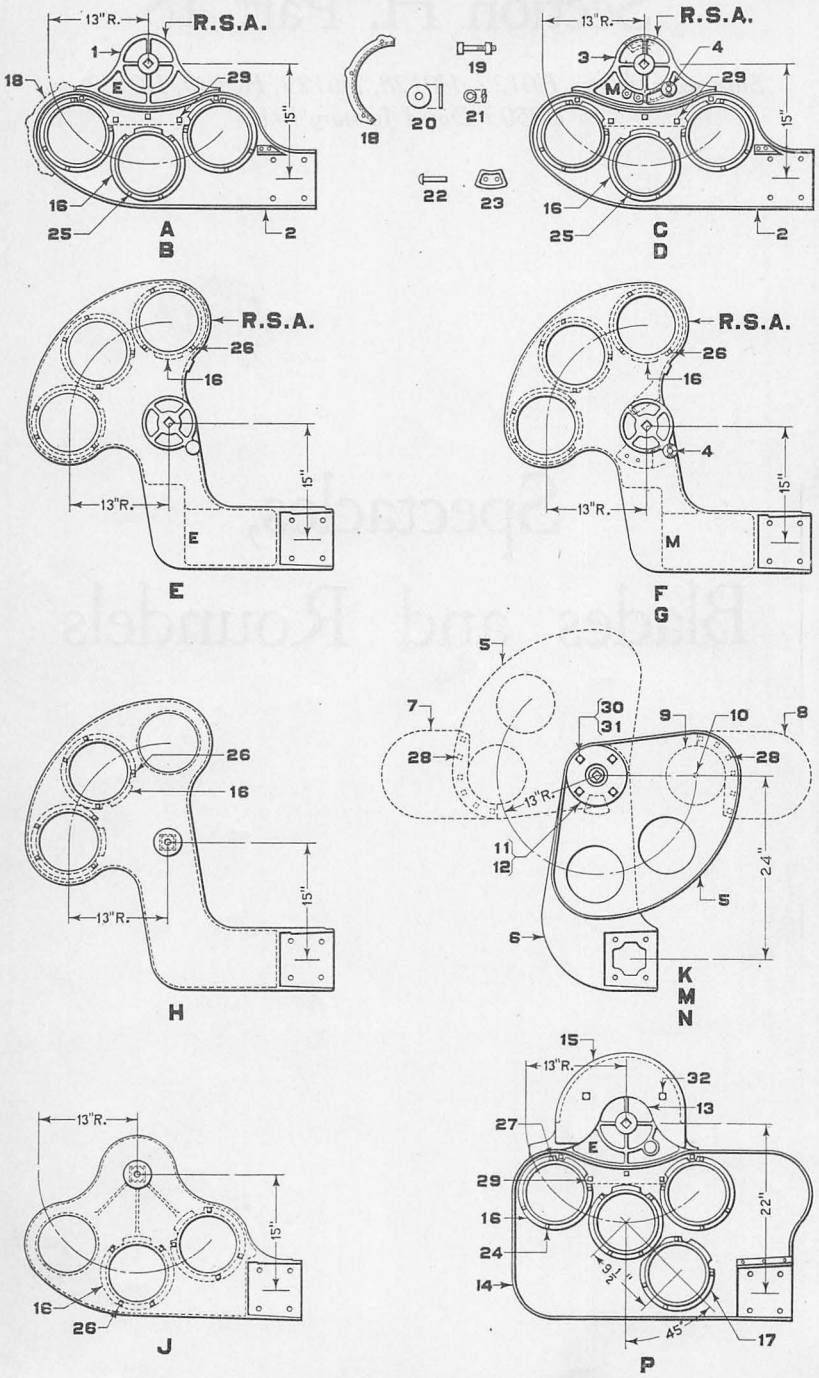

Upper Quadrant Spectacles

March 1916 GENERAL RAILWAY SIGNAL COMPANY

Upper Quadrant Spectacles

NOTE: Spectacles complete do not include roundels which must be ordered separately when desired. See Plate H1822 for roundels.

Drawing references are shown for convenience in checking shipping lists and invoices.

Fig. No.	Name	Drawing Reference
	Order by plate, figure number and name	
A	Spectacle Complete as shown, for Top of Mast Signals using Mechanism shown on Plate H0903. Three light, 90° throw, 13″ centers, takes 8⅜″ Roundels, used with 1″ square Shaft. Includes Bezel Rings and Bolts. R. S. A. Std. (1-1, 1-2, 3-16, 12-25, 5-29)	47460
A1	Spectacle Complete, same as Fig. A, except used with ¾″ to ⅞″ tapered Shaft. (1-1a, 1-2, 3-16, 12-25, 5-29)	
B	Spectacle Complete, for Top of Mast Signals using Mechanism shown on Plate H0901 and also for Base of Mast Signals. Three light, 90° throw, 13″ centers, takes 8⅜″ Roundels, used with 1″ square Shaft. Same as Fig. A, except with Counterweight Fig. 18. (1-A, 1-18a)	45635
B1	Spectacle Complete, same as Fig. B, except used with ¾″ to ⅞″ tapered Shaft. (1-A1, 1-18a)	
C	Spectacle Complete as shown, for mechanically operated Arms. Three light, 90° throw, 13″ centers, takes 8⅜″ Roundels, used with 1″ square Shaft. Includes Bezel Rings, Bolts, Stud, Washer and Cotter Pin. R. S. A. Std. (1-2, 1-3, 1-4a, 3-16, 12-25, 5-29)	47461
C1	Spectacle Complete, same as Fig. C, except used with ¾″ to ⅞″ tapered Shaft. (1-2, 1-3a, 1-4a, 3-16, 12-25, 5-29)	
D	Spectacle Complete, for 45° to 90° mechanically operated Arms, and for fixed Arm at 45°. Three light, 90° throw, 13″ centers, takes 8⅜″ Roundels, used with 1″ square Shaft. Includes Bezel Rings, Bolts, Stud, Washer, Cotter Pin, Stop Fig. 23 and Rivets. R. S. A. Std. (1-C, 2-22, 1-23)	
D1	Spectacle Complete, same as Fig. D, except used with ¾″ to ⅞″ tapered Shaft. (1-C1, 2-22, 1-23)	
E	Staggered Light Spectacle Complete as shown, three light, 90° throw, 13″ centers, takes 8⅜″ Roundels, used with 1″ square Shaft. Includes Bezel Rings and Bolts. R. S. A.Std	47462

GENERAL RAILWAY SIGNAL COMPANY March 1916

Upper Quadrant Spectacles

Drawing references are shown for convenience in checking shipping lists and invoices.

Fig. No.	Name	Drawing Reference
	Order by plate, figure number and name	
F	Staggered Light Spectacle Complete as shown, for mechanically operated Arms. Three light, 90° throw, 13″ centers, takes 8⅜″ Roundels, used with 1″ square Shaft. Includes Bezel Rings, Bolts, Stud, Washer and Cotter Pin. R. S. A. Std.	47456
G	Staggered Light Spectacle Complete, for 45° to 90° mechanically operated Arms and for fixed Arm at 45°. Same as Fig. F, except with Stop Fig. 23 and Rivets. R. S. A. Std. (1-F, 2-22, 1-23)	
H	Staggered Light Spectacle Complete as shown, for fixed Arm. Three light, 90° throw, 13″ centers, takes 8⅜″ Roundels. Includes Bezel Rings and Bolts. For application with Bearing see Plate H1804	
J	Spectacle Complete as shown, for fixed Arm. Three light, 90° throw, 13″ centers. takes 8⅜″ Roundels. Includes Bezel Rings and Bolts. For application with Bearing see Plate H1804	43191
K	Spectacle Complete as shown in full lines. Two light, 90° throw, 13″ centers, used with 1″ square Shaft. (1-5, 1-6, 1-11, 4-30, 4-30a)	32773
M	Spectacle Complete, same as Fig. K, except with Shield Fig. 8 shown in dotted lines. (1-K, 1-8, 6-28)	38050
M1	as above, except with Counterweight Fig. 9. (1-K, 1-8, 1-9 1-10, 6-28)	
N	Staggered Light Spectacle Complete, with Spectacle Fig. 5 and Shield Fig. 7 as shown in dotted lines. Two light, 90° throw 13″ centers, used with 1″ square Shaft. (1-5, 1-6, 1-7, 1-11, 1-12, 6-28, 4-30a, 4-31)	44926
P	Spectacle Complete as shown, four light, 90° throw 13″ centers takes 8⅜″ Roundels, used with 1″ square Shaft. Includes Bezel Rings and Bolts. (1-13, 1-14, 1-15, 3-16, 1-17, 15-24, 1-27, 5-29, 2-32)	40117
1	Hub, for Spectacles Complete Figs. A and B. Used with 1″ square Shaft	38902

March 1916 GENERAL RAILWAY SIGNAL COMPANY

Upper Quadrant Spectacles

Drawing references are shown for convenience in checking shipping lists and invoices.

Fig. No.	Name	Drawing Reference
	Order by plate, figure number and name	
1a	Hub, for Spectacles Complete Figs. A1 and B1. Used with $\frac{3}{4}''$ to $\frac{7}{8}''$ tapered Shaft	43729
2	Spectacle, for Spectacles Complete, Figs. A, A1, B, B1, C, C1, D and D1	38904
3	Hub, for Spectacles Complete Figs. C and D. Used with 1″ square Shaft	38903
3a	Hub, for Spectacles Complete Figs. C1 and D1. Used with $\frac{3}{4}''$ to $\frac{7}{8}''$ tapered Shaft	44717
4	Stud only, $\frac{7}{8}''$, for Mechanical Spectacles Complete Figs. C, C1, D, D1, F and G	10342
4a	as above, except with Washer and $\frac{3}{16}''$ x $1\frac{1}{2}''$ Cotter Pin	
5	Spectacle, for Spectacles Complete Figs. K, M, M1 and N	32774
6	Blade Grip, for Spectacles Complete Figs. K, M, M1 and N	32775
7	Shield, for Spectacle Complete Fig. N	44927
8	Shield, for Spectacles Complete Figs. M and M1	33866
9	Counterweight, for Spectacle Complete Fig. M1	35959
10	Rivet, $\frac{1}{2}''$ x $1\frac{3}{8}''$ rd. hd., for fastening Counterweight Fig. 9 to Spectacle Fig. 5	0228
11	Grip Plate, for Spectacles Figs. K, M, M1 and N	31006
12	Spacer Plate, for Spectacle Compiete Fig. N	31007
13	Hub, for Spectacle Complete Fig. P. Used with 1″ square Shaft	40118
14	Spectacle, for Spectacle Complete Fig. P	40120
15	Counterweight, for Spectacle Complete Fig. P	40119
16	Bezel Ring	47148
17	Bezel Ring, for lower light of Spectacle Complete Fig. P. only	47256
18	Counterweight, for Spectacles Complete Figs. B and B1	45636
18a	as above, except with Bolts and Washers. (1-18, 3-19, 3-20, 3-21)	
19	Bolt, $\frac{3}{8}''$ x 2″ sq. hd. with sq. Nut, for fastening Counterweight Fig. 18 to Spectacle	08
20	Washer, for Bolt Fig. 19	4552
21	Lock Washer, for Bolt Fig. 19	0569
22	Rivet, $\frac{3}{8}''$ x $1\frac{1}{2}''$, for fastening Filler Block Fig. 23 to Spectacle.	0428

GENERAL RAILWAY SIGNAL COMPANY March 1916

Upper Quadrant Spectacles

Drawing references are shown for convenience in checking shipping lists and invoices.

Fig. No.	Name	Drawing Reference
	Order by plate, figure number and name	
23	Filler Block, for Spectacles Figs. D, D1, G and G1 when operating from 45° to 90° or when used as fixed Arm at 45°....	36208
24	Bolt, $\frac{1}{4}''$ x $\frac{1}{2}''$ sq. hd. with sq. Nut, for fastening Bezel Rings Figs. 16 and 17 to Spectacle Fig. P..	29254
25	Bolt, $\frac{1}{4}''$ x $\frac{5}{8}''$ sq. hd. with sq. Nut, for fastening Bezel Ring Fig. 16 to Spectacles Figs. A, A1, B, B1, C, C1, D and D1....	0300
26	Bolt, $\frac{1}{4}''$ x $\frac{3}{4}''$ sq. hd. with sq. Nut, for fastening Bezel Ring Fig. 16 to Spectacles Figs. E, F, G, H and J.....	0134
27	Bolt, $\frac{1}{4}''$ x $\frac{7}{8}''$ sq. hd. with sq. Nut, for fastening Bezel Ring Fig. 16 to Spectacle Fig. P.....	0232
28	Bolt, $\frac{3}{8}''$ x $\frac{3}{4}''$ sq. hd. with sq. Nut, for fastening Shields Fig. 7 and Fig. 8 to Spectacle Fig. 5.....	31070
29	Bolt, $\frac{3}{8}''$ x 1″ sq. hd. with sq. Nut, for fastening Spectacles Figs. 2 and 14 to Hubs Figs. 1, 1a, 2, 2a and 13.....	06
30	Bolt, $\frac{1}{2}''$ x $1\frac{3}{4}''$ sq. hd with sq. Nut, for fastening Spectacle Fig. 5 to Blade Grip Fig. 6 on Spectacles Figs. K, M and M1....	0390
30a	Lock Washer for Bolts Figs. 30 and 31.....	091
31	Bolt, $\frac{1}{2}''$ x 3″ sq. hd. with sq. Nut, for fastening Spectacle Fig. 5 to Blade Grip Fig. 6 on Spectacle Fig. N.....	0242
32	Bolt, $\frac{5}{8}''$ x 3″ sq. hd. with hex. Nut, for fastening Counterweight Fig. 15 to Hub Fig. 13.....	39513

Memoranda

PLATE H1804

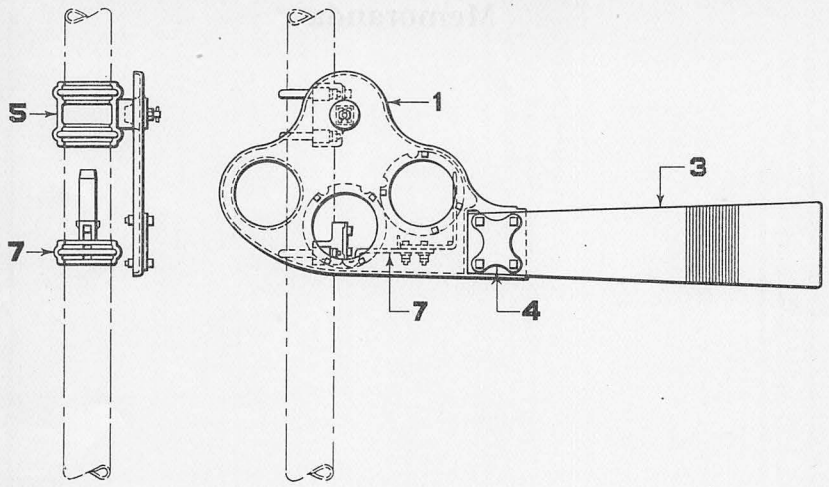

A

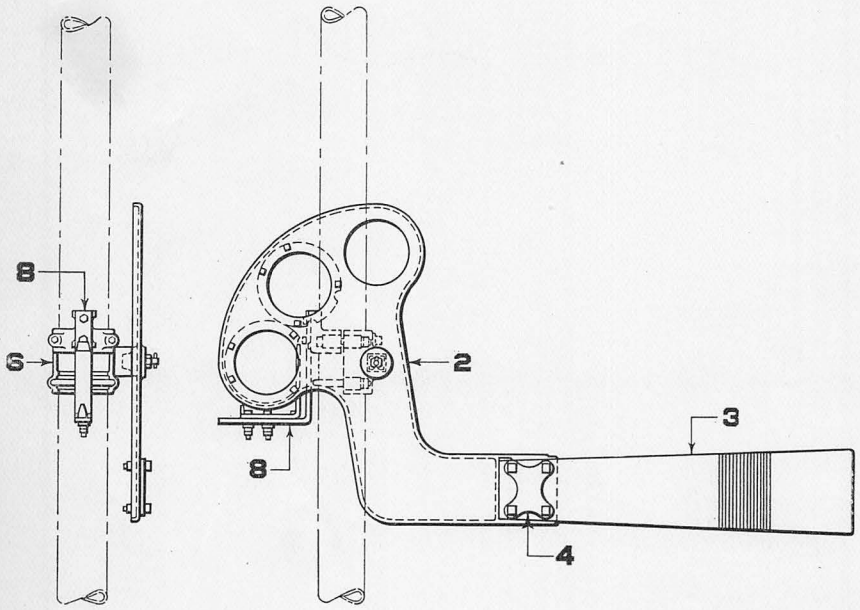

B

Fixed Arms

March 1916 GENERAL RAILWAY SIGNAL COMPANY

Fixed Arms

NOTE: Spectacles as shown can be fixed at either the 0° or 45° position. If blade other than that shown is desired, same must be specified. See Part 18 of this Section for blades.

Drawing references are shown for convenience in checking shipping lists and invoices.

Fig. No.	Name	Drawing Reference
	Order by plate, figure number and name	
A	Fixed Arm Complete as shown, for 5″ pipe. Includes Spectacle, Wood Blade, Lamp Bracket and Bearing. (1–1, 1-3, 1-4, 4-4b, 1-5, 1-7)	
A1	same as Fig. A, except with Steel Blade. (1-1, 1-3a, 1-4a, 1-5, 1-7)	
B	Fixed Arm Complete as shown, for 5″ pipe. Includes Spectacle, Wood Blade, Lamp Bracket and Bearing. (1-2, 1-3, 1-4, 4-4b, 1-6, 1-8)	
B1	same as Fig. B, except with Steel Blade. (1-2, 1-3a, 1-4a, 1-6, 1-8)	
1	Spectacle Complete, three light, 90° throw, 13″ centers, takes $8\frac{3}{8}$″ Roundels. Includes Bezel Rings and Bolts. For details see Plate H1801 Fig. J	43191
2	Staggered Light Spectacle Complete, three light, 90° throw, 13″ centers, takes $8\frac{3}{8}$″ Roundels. Includes Bezel Rings and Bolts. For details see Plate H1801 Fig. H	
3	Wood Blade, 3′-6″ long, one priming coat only	
3a	Steel Blade, 3′-6″ long. Furnish sketch showing striping and specify colors	
4	Blade Plate, for Wood Blade Fig. 3	10319
4a	Blade Clamp Complete, for Steel Blade Fig. 3a. For details see Plate H1820 Fig. 16	48021
4b	Bolt, $\frac{1}{2}$″ x 2″ sq. hd. with sq. Nut, for Blade Plate Fig. 4	011
5	Bearing Complete for 5″ pipe, for Figs. A and A1. Includes Bolts, Set Screw and Cotter Pin. (1-5a, 1-5b, 2-5c, 1-5d).	43189
5a	Bearing only, for Figs. 5 and 6	43190
5b	Bolt, $\frac{3}{4}$″ x $5\frac{1}{2}$″ sq. hd. with hex. Nut and Cotter Pin, for Bearings Figs. 5 and 6	
5c	U Bolt Complete, for 5″ pipe, for Bearings Figs. 5 and 6. Includes hex. Nuts and Washers	43741

GENERAL RAILWAY SIGNAL COMPANY March 1916

Fixed Arms

Drawing references are shown for convenience in checking shipping lists and invoices.

Fig. No.	Name	Drawing Reference
	Order by plate, figure number and name	
5d	Set Screw, $\frac{1}{2}''$ x $1\frac{1}{2}''$ sq. hd., for Bearings Fig. 5 and Fig. 6.....	39066
6	Bearing Complete, for Figs. B and B1. Same as Fig. 5 except with Clamp Fig. 6a and two Bolts Fig. 6b in place of one U Bolt Fig. 5c. (1-5a, 1-5b, 1-5c, 1-5d, ~~2-6a~~ 1-6A, 2-6B).....	
6a	Clamp, for Lamp Bracket.....	35654
6b	Bolt, $\frac{3}{4}''$ x $5\frac{3}{4}''$ sq. hd. with hex. Nut and Lock Washer, for fastening Lamp Bracket Fig. ~~8~~ CLAMP 6A to Bearing Fig. 6.....	
7	Lamp Bracket Complete, for Vertical Light Spectacle Fig. 1. Includes Clamp, U Bolt, Support, Bracket and Bolts. For details see Plate H1711 Fig. B.....	35651
8	Lamp Bracket Complete, for Staggered Light Spectacle Fig. 2. Includes Support, Bracket and Bolts. For details see Plate H1711 Fig. J1.....	

Memoranda

GENERAL RAILWAY SIGNAL COMPANY March 1916

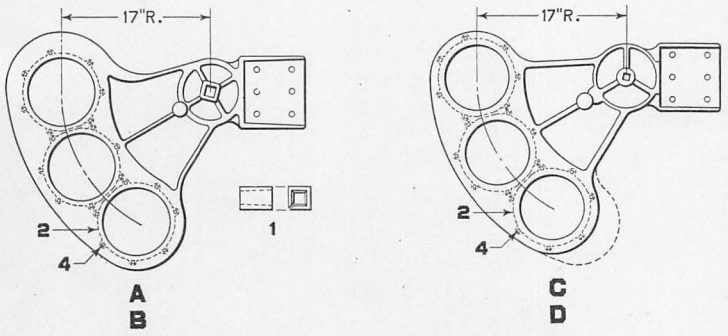

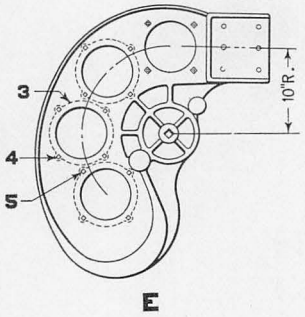

Lower Quadrant Spectacles

March 1916 GENERAL RAILWAY SIGNAL COMPANY

Lower Quadrant Spectacles

NOTE: Spectacles complete do not include roundels which must be ordered separately if desired. See Plate H1822 for roundels.

Drawing references are shown for convenience in checking shipping lists and invoices.

Fig. No.	Name	Drawing Reference
	Order by plate, figure number and name	
A	Spectacle Complete as shown, three light, 60° throw, 17″ centers, takes 8 3/8″ Roundels, used with 1 1/4″ square Shaft. Includes Bezel Rings and Bolts	
B	Spectacle Complete, same as Fig. A except with Bushing Fig. 1. Used with 3/4″ to 7/8″ tapered Shaft	
C	Spectacle Complete as shown, for Base of Mast Signals, three light, 60° throw, 17″ centers, takes 8 3/8″ Roundels, used with 3/4″ to 7/8″ tapered Shaft. Includes Bezel Rings and Bolts	
D	Spectacle Complete, for Top of Mast Signals, same as Fig. C, except with extra weight shown in dotted lines	
E	Spectacle Complete as shown, three light, 90° throw, 10″ centers, takes 6 1/2″ Roundels, used with 3/4″ x 7/8″ tapered Shaft. Includes Bezel Rings and Bolts	22370
1	Bushing, for Spectacle Complete Fig. B	48109
2	Bezel Ring Complete, for Spectacles Figs. A, B, C and D. (1-2a, 1-2b, 3-2c)	10341
2a	Bezel Ring only, for Fig. 2	6902
2b	Retaining Ring, for Fig. 2	6942
2c	Bolt, 1/4″ x 3/4″ sq. hd., with sq. Nut, for Fig. 2	0134
3	Bezel Ring, for Spectacle Fig. E	5090
4	Bolt, 1/4″ x 1 1/4″ sq. hd. with sq. Nut, for fastening Bezel Rings Figs. 2 and 3 to Spectacles	05
5	Bolt, 1/4″ x 2 1/2″ sq. hd. with sq. Nut, for fastening Bezel Ring Fig. 3 to Spectacle Fig. E	0343

Memoranda

Memoranda

PLATE H1812

GENERAL RAILWAY SIGNAL COMPANY March 1916

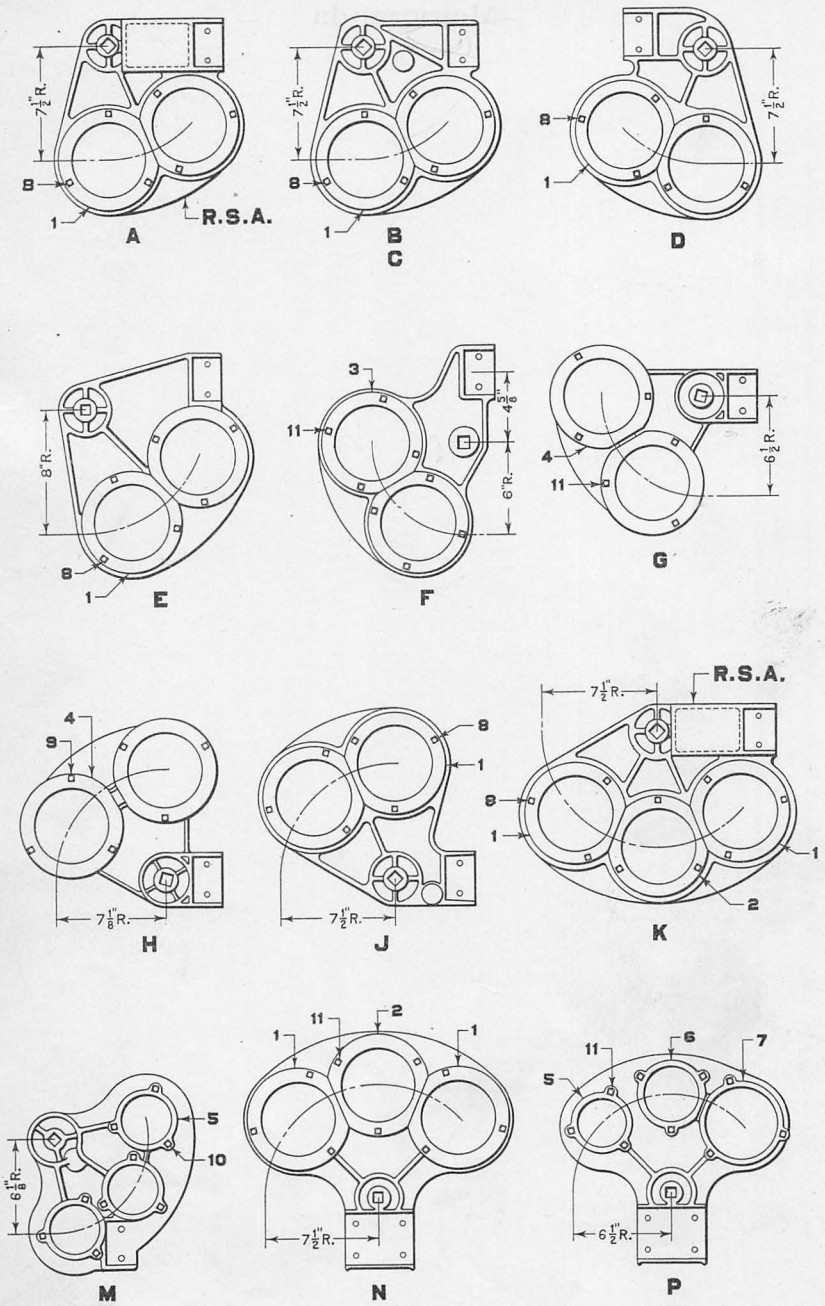

Dwarf Signal Spectacles

March 1916 GENERAL RAILWAY SIGNAL COMPANY

Dwarf Signal Spectacles

Upper and Lower Quadrant

NOTE: Spectacles complete do not include roundels which must be ordered separately if desired. See Plate H1822 for roundels.

Drawing references are shown for convenience in checking shipping lists and invoices.

Fig. No.	Name	Drawing Reference
	Order by plate, figure number and name	
A	Upper Quadrant Spectacle Complete as shown, two light, 45° throw, $7\frac{1}{2}''$ centers, takes $5\frac{3}{8}''$ Roundels, used with $\frac{3}{4}''$ square Shaft. Includes Bezel Rings and Bolts. R. S. A. Std.	40020
B	Upper Quadrant Spectacle Complete as shown, two light, 45° throw, $7\frac{1}{2}''$ centers, takes $5\frac{3}{8}''$ Roundels, used with $\frac{3}{4}''$ square Shaft. Includes Bezel Rings and Bolts.	
C	Upper Quadrant Spectacle Complete, same as Fig. B except used with $\frac{5}{8}''$ square Shaft.	
D	Left Hand Upper Quadrant Spectacle Complete as shown, two light 45° throw, $7\frac{1}{2}''$ centers, takes $5\frac{3}{8}''$ Roundels, used with $\frac{3}{4}''$ square Shaft. Includes Bezel Rings and Bolts.	43672
E	Upper Quadrant Spectacle Complete as shown, two light, 45° throw, $8''$ centers takes $5\frac{3}{8}''$ Roundels, used with $\frac{11}{16}''$ square Shaft. Includes Bezel Rings and Bolts.	30711
F	Lower Quadrant Spectacle Complete as shown, two light, 60° throw, $6''$ centers, takes $5\frac{3}{8}''$ Roundels, used with $\frac{11}{16}''$ square Shaft. Includes Bezel Rings and Bolts.	9011
G	Lower Quadrant Spectacle Complete as shown, two light, 60° throw $6\frac{1}{2}''$ centers, takes $5\frac{3}{8}''$ Roundels, used with $\frac{11}{16}''$ square Shaft. Includes Bezel Rings and Bolts.	3638
H	Lower Quadrant Spectacle Complete as shown, two light, 60° throw, $7\frac{1}{8}''$ centers, takes $5\frac{3}{8}''$ Roundels, used with $\frac{11}{16}''$ square Shaft. Includes Bezel Rings and Bolts.	3636
J	Upper Quadrant Spectacle Complete as shown, two light, 45° throw, $7\frac{1}{2}''$ centers, takes $5\frac{3}{8}''$ Roundels, used with $\frac{3}{4}''$ square Shaft. Includes Bezel Rings and Bolts.	44998
K	Upper Quadrant Spectacle Complete as shown, three light, 90° throw, $7\frac{1}{2}''$ centers, takes $5\frac{3}{8}''$ Roundels, used with $\frac{3}{4}''$ square Shaft. Includes Bezel Rings and Bolts. R. S. A. Std.	40423

GENERAL RAILWAY SIGNAL COMPANY March 1916

Dwarf Signal Spectacles

Upper and Lower Quadrant

Drawing references are shown for convenience in checking shipping lists and invoices.

Fig. No.	Name	Drawing Reference
	Order by plate, figure number and name	
M	Upper Quadrant Spectacle Complete as shown, three light, 90° throw, $6\frac{1}{8}''$ centers, takes $3\frac{1}{2}''$ Roundels, used with $\frac{5}{8}''$ square Shaft. Includes Bezel Rings and Bolts.	
N	Upper Quadrant Spectacle Complete as shown, three light, 90° throw, $7\frac{1}{2}''$ centers, takes $5\frac{3}{8}''$ Roundels, used with $\frac{11}{16}''$ square Shaft. Includes Bezel Rings and Bolts.	32630
P	Upper Quadrant Spectacle Complete as shown, three light, 90° throw, $6\frac{1}{2}''$ centers, takes $3\frac{1}{2}''$, $4''$ and $5''$ Roundels, used with $\frac{11}{16}''$ square Shaft. Includes Bezel Rings and Bolts.	29941
1	Bezel Ring, for Spectacles Figs. A, B, C, D, E, J, K and N.	28553
2	Bezel Ring, for Spectacles Figs. K and N.	28554
3	Bezel Ring, for Spectacle Fig. F.	9015
4	Bezel Ring, for Spectacles Fig. G and Fig. H.	3408
5	Bezel Ring, for Spectacles Fig. M and Fig. P.	941
6	Bezel Ring, for Spectacle Fig. P.	29943
7	Bezel Ring, for Spectacle Fig P.	30844
8	Bolt, $\frac{1}{4}''$ x $\frac{5}{8}''$ sq. hd. with sq. Nut, for fastening Bezel Rings to Spectacles Figs. A, B, C, D, E, J and K.	0300
9	Bolt, $\frac{1}{4}''$ x $\frac{3}{4}''$ sq. hd. with sq. Nut, for fastening Bezel Ring Fig. 4 to Spectacle Fig. H.	0134
10	Bolt, $\frac{1}{4}''$ x $\frac{7}{8}''$ sq. hd. with sq. Nut, for fastening Bezel Ring Fig. 5 to Spectacle Fig. M.	0232
11	Bolt, $\frac{1}{4}''$ x $1''$ sq. hd. with sq. Nut, for fastening Bezel Rings to Spectacles Figs. F, G, N and P.	02

Memoranda

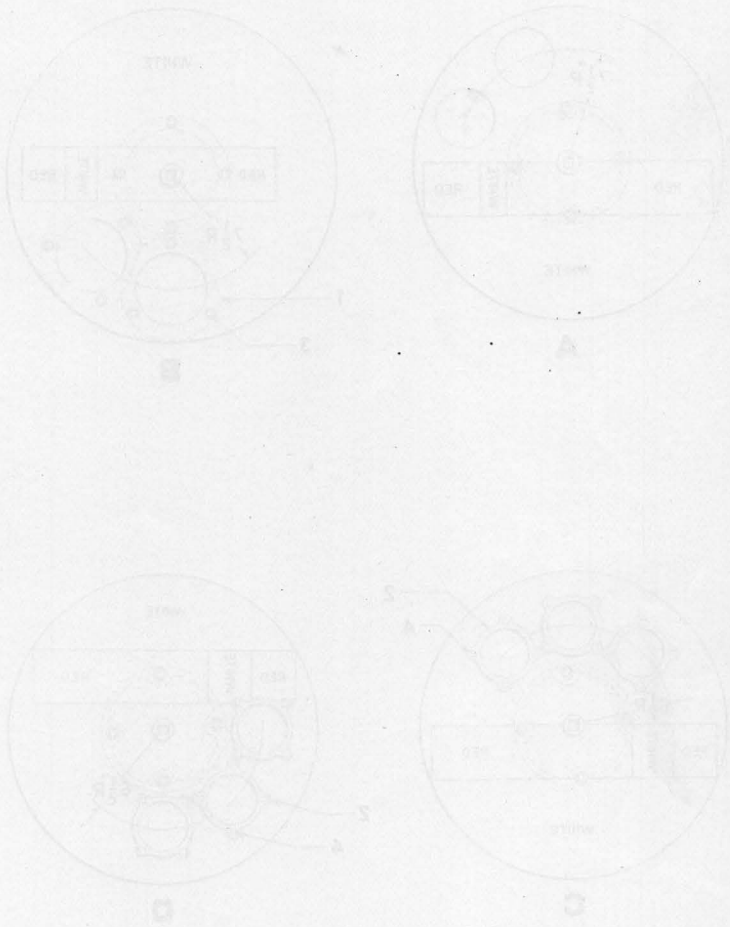

PLATE H1816

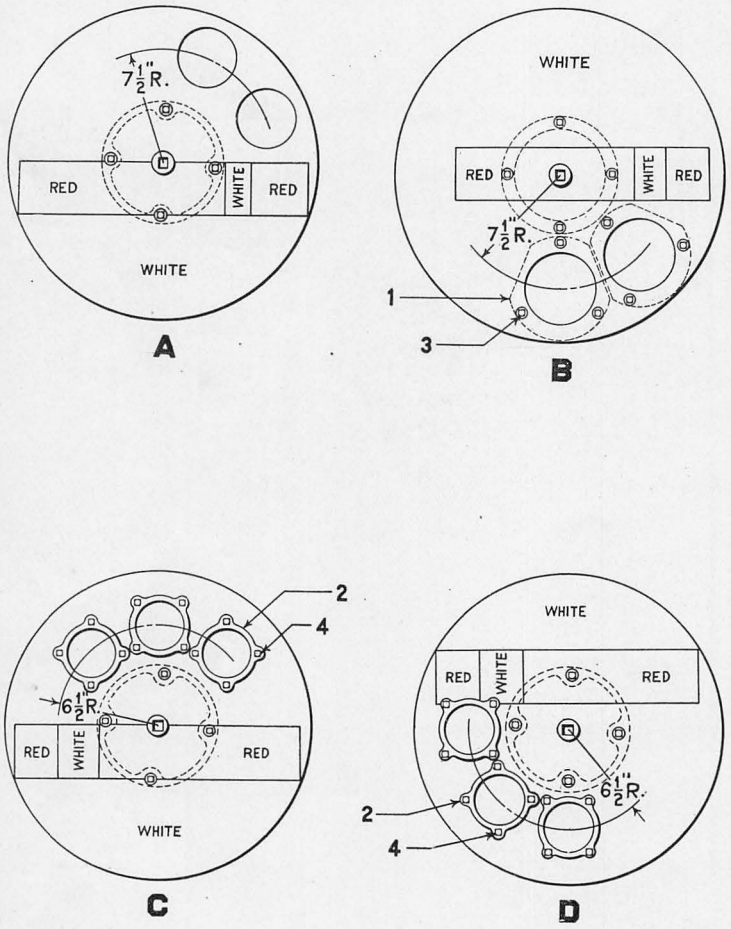

Disc Spectacles for Dwarf Signals

March 1916 GENERAL RAILWAY SIGNAL COMPANY

Disc Spectacles

For Dwarf Signals

NOTE: Unless otherwise specified, discs will be enameled as shown. They do not include roundels which must be ordered separately if desired. See Plate H1822 for roundels.

Drawing references are shown for convenience in checking shipping lists and invoices.

Fig. No.	Name	Drawing Reference
	Order by plate, figure number and name	
A	Disc Complete as shown, $20\frac{1}{2}''$ dia., for right hand upper quadrant indication. Two light, 90° throw, $7\frac{1}{2}''$ centers, used with $\frac{11}{16}''$ square Shaft, front enameled as shown. back enameled white	32726
B	Disc Complete as shown, $22''$ dia., for right hand upper quadrant indication. Two light, 45° throw, $7\frac{1}{2}''$ centers, takes $5\frac{3}{8}''$ Roundels, used with $\frac{5}{8}''$ square Shaft, front enameled as shown, back enameled white. Includes Bezel Rings and Bolts. Hub shipped loose to be assembled in field to suit angle of shaft	43996
C	Disc Complete as shown, $20\frac{1}{2}''$ dia., for left hand upper quadrant indication. Three light, 90° throw, $6\frac{1}{2}''$ centers, takes $3\frac{1}{2}''$ Roundels, used with $\frac{11}{16}''$ square Shaft, front enameled as shown, back enameled white. Includes Bezel Rings and Bolts	43080
D	Disc Complete as shown, $20\frac{1}{2}''$ dia., for left hand upper quadrant indication. Three light, 90° throw, $6\frac{1}{2}''$ centers, takes $3\frac{1}{2}''$ Roundels, used with $\frac{11}{16}''$ square Shaft, front enameled as shown, back enameled white. Includes Bezel Rings and Bolts	42473
1	Bezel Ring, for Disc Fig. B	43999
2	Bezel Ring, for Discs Figs. C and D	4606
3	Bolt, galvanized, $\frac{1}{4}''$ x $\frac{7}{8}''$ sq. hd. with sq. Nut, for fastening Bezel Ring Fig. 1 to Disc Fig. B	43377
4	Bolt, galvanized, $\frac{1}{4}''$ x $1''$ sq. hd. with sq. Nut, for fastening Bezel Ring Fig. 2 to Discs Figs. C and D	43204

Memoranda

Memoranda

PLATE H1817

GENERAL RAILWAY SIGNAL COMPANY April 1927

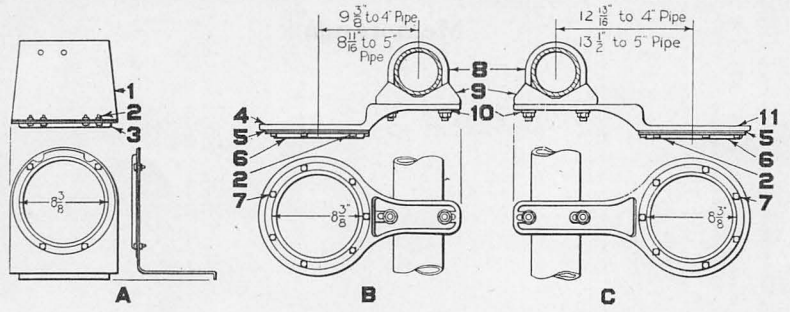

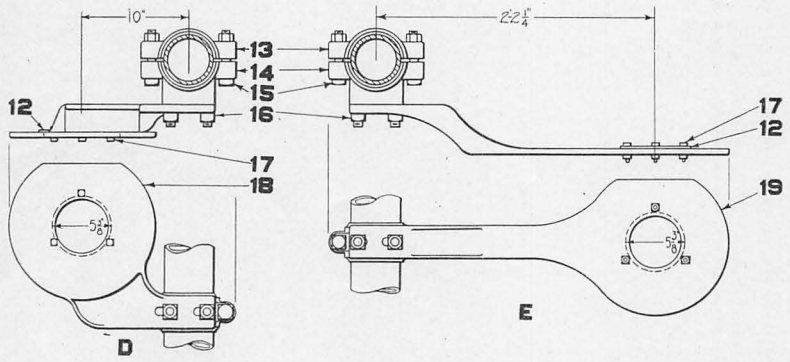

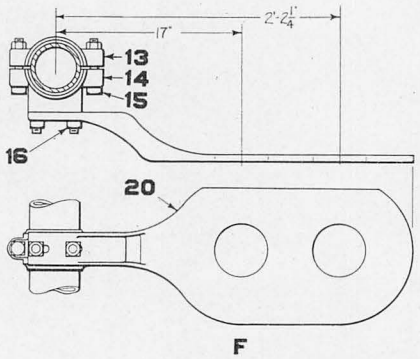

Marker Light Spectacles

April 1927 GENERAL RAILWAY SIGNAL COMPANY

Marker Light Spectacles

Note: Marker Light Spectacles Complete do not include roundels. See Plate H1822 for roundels and order separately.

When specified, fittings for other sizes of pipe than shown can be furnished.

Drawing references are shown for convenience in checking shipping lists and invoices.

Fig. No.	Name	Drawing Reference
	Order by plate, figure number and name	
A	Marker Light spectacle, A. R. A. Type, Complete as shown, requires 8⅜″ Roundel and is for mounting on any A. R. A. type of Lamp Bracket. Includes Bezel Ring and Bolts. (1-1, 4-2, 1-3)	50790
B	Staggered Marker Light Spectacle Complete as shown for 4″ pipe, requires 8⅜″ Roundel and is for use with Lamp Bracket shown on Plate H1711 Fig. C. Includes Bezel Ring, Bolts and Clamp. (4-2, 1-4, 1-5, 1-6, 3-7, 1-8, 1-9, 2-10)	35720
B1	as above, except for 5″ pipe. Use Lamp Bracket shown on Plate H1711, Fig. D. (4-2, 1-4, 1-5, 1-6, 3-7, 1-8a, 1-9, 2-10)	35720
C	Vertical Marker Light Spectacle Complete as shown, for 4″ pipe; requires 8⅜″ Roundel and is for use with Lamp Bracket shown on Plate H1711, Fig. A. Includes Bezel Ring, Bolts and Clamp. (4-2, 1-5, 1-6, 3-7, 1-8, 1-9, 2-10, 1-11)	35726
C1	as above, except for 5″ pipe. Use Lamp Bracket shown on Plate H1711, Fig. B. (4-2, 1-5, 1-6, 3-7, 1-8a, 1-9, 2-10, 1-11)	35726
D	Staggered Marker Light Spectacle Complete as shown for 4″ pipe; requires 5⅜″ Roundel and is for use with a special Lamp Bracket. Includes Bezel Ring, Bolts and Clamp. (1-12, 1-13, 1-14, 2-15, 2-16, 3-17, 1-18)	
D1	as above, except for 5″ pipe. This Spectacle requires a special Lamp Bracket. (1-12, 1-13a, 1-14a, 2-15a, 2-16, 3-17, 1-18)	

(Continued on following page)

GENERAL RAILWAY SIGNAL COMPANY April 1927

Marker Light Spectacles

Drawing references are shown for convenience in checking shipping lists and invoices.

Fig. No.	Name	Drawing Reference
	Order by plate, figure number and name	
E	Vertical Marker Light Spectacle Complete as shown, for 4″ pipe; requires $5\frac{3}{8}$″ Roundel and is for use with Lamp Bracket shown on Plate H1711, Fig. R. Includes Bezel Ring, Bolts and Clamp. (1-12, 1-13, 1-14, 2-15, 2-16, 3-17, 1-19)	
E1	as above, except for 5″ pipe. Use Lamp Bracket shown on Plate H1711, Fig. S. (1-12, 1-13a, 1-14a, 2-15a, 2-16, 3-17, 1-19)	
F	Marker Light Spectacle Complete as shown, for 4″ pipe, for use with a Double Face Reflector Lamp and with Lamp Bracket shown on Plate H1711, Fig. R. (1-13, 1-14, 2-15, 2-16, 1-20)	
F1	as above, except for 5″ pipe. Use Lamp Bracket shown on Plate H1711, Fig. S. (1-13a, 1-14a, 2-15a, 2-16, 1-20)	
1	Spectacle only for Fig. A	50791
2	Bolt and Nut, $\frac{1}{4}$″ x $\frac{5}{8}$″ sq. hd., sq. nut, for fastening Bezel Rings to Spectacles	0300
3	Bezel Rings as shown for Fig. A	47148
4	Spectacle only for Fig. B	35722
5	Retaining Ring as shown for Spectacles Figs. B and C	31004
6	Bezel Ring as shown for Spectacles Figs. B and C	31005
7	Bolt and Nut, $\frac{1}{4}$″-20 x $\frac{1}{2}$″ sq. hd , sq. nut, for fastening Bezel Rings to Spectacles	29254
8	U Bolt with hex. Nuts, for 4″ pipe, for Spectacles B and C	35724
8a	as above, except for 5″ pipe, for Spectacles B1 and C1	35725
9	Adapter for 4″ and 5″ pipe for Spectacles Figs. B and C	35723
10	Washer, $\frac{1}{2}$″, for U. Bolt Fig. 8	072
11	Spectacle only for Fig. C	35728
12	Bezel Ring as shown for Spectacles Figs. D and E	7884
13	Back Half Clamp for 4″ pipe, for Spectacles D, E and F	11615
13a	as above, except for 5″ pipe for Spectacles D1, E1 and F1	11672

(Continued on following page)

April 1927 GENERAL RAILWAY SIGNAL COMPANY

Marker Light Spectacles

Drawing references are shown for convenience in checking shipping lists and invoices

Fig. No.	Name	Drawing Reference
	Order by plate, figure number and name	
14	Front Half Clamp, for 4″ pipe, for Spectacles D, E and F	11614
14a	as above, except for 5″ pipe for Spectacles D1, E1 and F1	11671
15	Bolt and Nut, $\frac{3}{4}$″-10 x $4\frac{1}{2}$″ sq. hd., hex. nut, for 4″ pipe, for Clamps Figs. 13 and 14	0670
15a	Bolt and Nut, $\frac{5}{8}$″ x $6\frac{1}{4}$″ sq. hd., hex. nut for 5″ pipe for Clamps Fig. 13a and 14a	0671
16	Bolt and Nut, $\frac{3}{4}$″-10 x $2\frac{1}{2}$″ sq. hd., sq. nut, for fastening Spectacles to Clamps	0299
17	Bolt and Nut, sq. hd., sq. nut, for fastening Bezel Ring Fig. 12 to Spectacles Fig. D and E	0232
18	Spectacle only for Fig. D	33535
19	Spectacle only for Fig. E	33537
20	Spectacle only for Fig. F	50431

Memoranda

Section H, Part 19

Electric Lamps for Semaphore Signals Markers, etc.

Copyright 1925, General Railway Signal Company

PLATE H1901

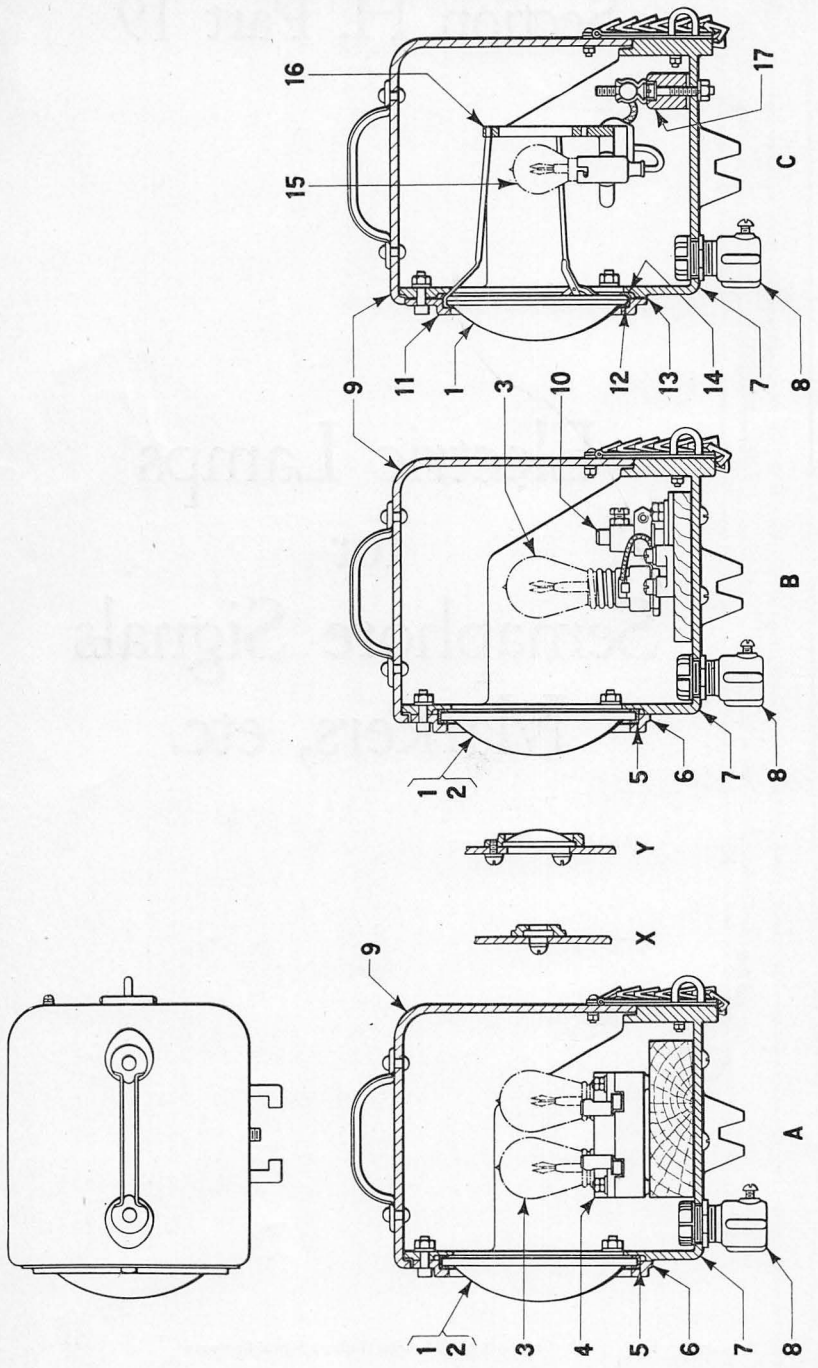

Semaphore Lamps

October 1925 GENERAL RAILWAY SIGNAL COMPANY

Semaphore Lamps

Note: The lamps shown on this plate are intended for use with Semaphore Signals and are furnished with clear lenses unless otherwise specified.

Lamps complete are regularly furnished with plain covers, but when specified will be equipped with peep hole Fig. X, or backlight Fig. Y.

Lamp Bulbs are not included with lamps complete and must be ordered sparately.

Lamp Brackets are shown on Plates H1711 and H1713 and are furnished only when specified.

Drawing references are shown for convenience in checking shipping lists and invoices.

Fig. No.	Name	Drawing Reference
	Order by plate, figure number and name	
A	Electric Semaphore Lamp having double lamp receptacle and 5″ dia. clear lens complete as shown. Cut in relay and lamp bulbs are not included	
A1	as above, except with cut in relay	
A2	same as Fig. A, except with 5⅜″ dia. clear lens	
A3	same as Fig. A, except with 5⅜″ dia. clear lens and cut in relay	
B	Electric Semaphore Lamp having single adjustable lamp receptacle and 5″ clear lens complete as shown. Lamp bulb is not included	
B1	same as above, except with 5⅜″ dia., clear lens	
C	Electric Semaphore Lamp having lamp adapter and 5″ dia. clear lens complete as shown. Lamp bulb is not included	
1	Clear Lens, 5″ dia., 3½″ focus, for Figs. A, B, and C	31624
2	Clear Lens, 5⅜″ dia., 3½″ focus, for Figs. A and B	31624–1
3	Electric Lamp Bulb, for Figs. A and B. See Plate H1911 for ratings and order references	
4	Lamp Block for 2 lamps complete without cut in relay, for Fig. A	
4a	Lamp Block for 2 lamps complete with cut in relay, for Fig. A	
5	Gasket, (lamp wicking) for use with lens in Figs. A and B	
6	Bezel Ring, for use with 5″ lens in Figs. A and B	31623–1
6a	Bezel Ring, for use with 5⅜″ lens in Figs. A and B	31623–2
7	Case as shown. Does not include cover	
8	Bushing Complete as shown, for ¾″ flexible conduit	

(Continued on following page)

GENERAL RAILWAY SIGNAL COMPANY October 1925

Semaphore Lamps

Drawing references are shown for convenience in checking shipping lists and invoices.

Fig. No.	Name	Drawing Reference
	Order by plate, figure number and name	
9	Cover as shown	
9a	Cover, with peep hole, Fig. X	
9b	Cover, with back light, Fig. Y	
10	Adjuster complete, includes single lamp receptacle, mounting block, terminals, and mounting screws	
11	Bezel Ring, for use with 5″ lens and adapter in Fig. C	31623-3
12	Gasket, for use between bezel ring and lens in Fig. C	13014-6
13	Gasket, for use between bezel ring and case in Fig. C	13014-8
14	Gasket, for use between adapter and case in Fig. C	13014-7
15	Electric Lamp Bulb (Commercial Automobile type) 6-8 volts, 12.6 watts as shown in Fig. C. (Not furnished with Lamp complete)	
16	Adapter Complete, with a single lamp receptacle as shown in Fig. C	49781
17	Fuse Block Complete with screws for mounting. Includes fuse rated as specified	

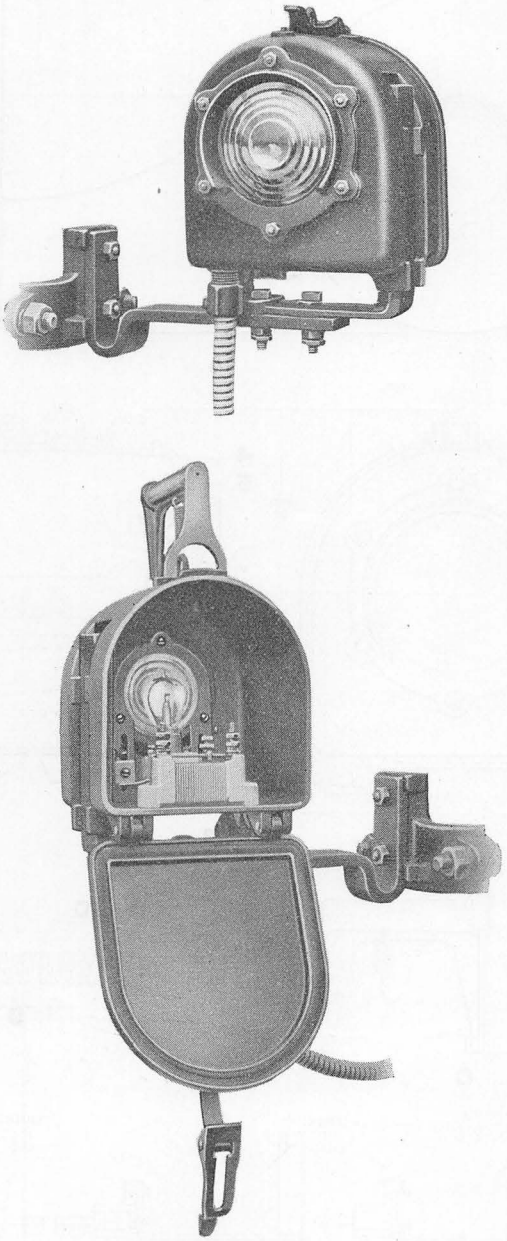

Doublet Lens Electric Lamp

PLATE H1905

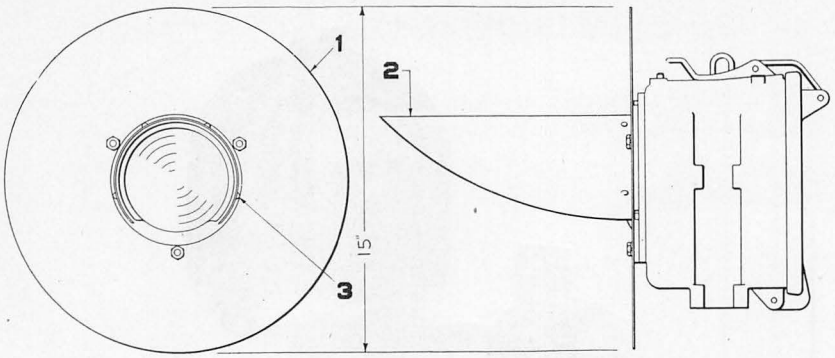

A

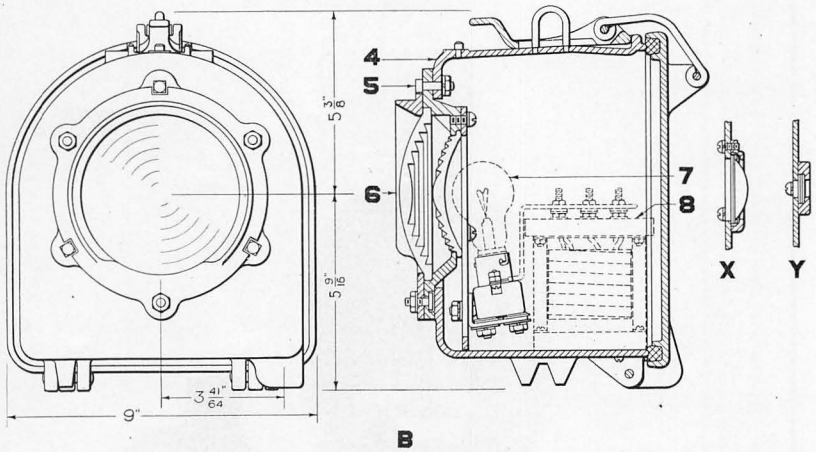

B

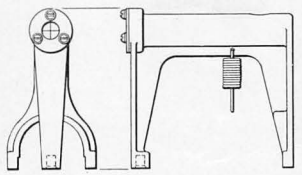

C

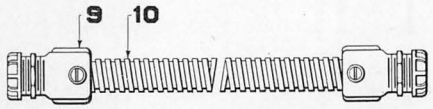

D

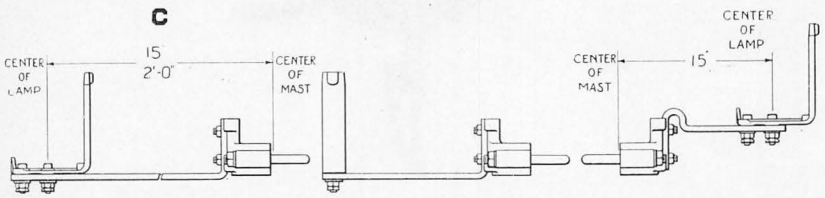

E F G

Marker Lights and Electric Lamps

October 1925 GENERAL RAILWAY SIGNAL COMPANY

Marker Lights and Electric Lamps

Note: The lamp unit shown on this plate is suitable for use as a semaphore electric lamp or for use as a marker light where long range is not required. Where a long range marker light is desired, we recommend the type D, one-indication unit shown on Plate H2113, Fig. D.

The lamp unit is regularly supplied with the 5 inch standard doublet lens unit, the outer lens being 5 inches in diameter of clear glass to give a 3 degree beam spread around the axial beam and the inner lens being 3⅝ inches in diameter.

Unless otherwise specified all semaphore lamps will be furnished with an inner clear lens to give a clear white indication and marker lights with an inner red lens to give a red indication.

When specified an outer lens of the Spredlite type will be furnished to give a 6 degree spread either side of axial beam.

Lamp bulbs and transformers are not included with marker lights or electric lamps as listed, but must be ordered separately. See Plate H1911 for lamp bulbs and Plate P0102 for transformers.

Transformers, when specified separately, can be mounted in lamp case before shipment if desired.

Resistance units suitable for mounting in this lamp case are shown on Plate N1301 and will be mounted before shipment when specified.

Marker lights and electric lamps are regularly equipped with one A. R. A. terminal block.

Unless otherwise specified, marker lights and electric lamps will be furnished as shown with plain covers without bulls eye back light Fig. X or peep hole Fig. Y.

For additional lamp brackets see Plates H1711 and H1713.

ALIGNMENT

For the purpose of easily aligning the lamp with the track, the top of each lamp case has three points of contact accurately placed and arranged for attaching a portable sighting device Fig. C. This sighting device is furnished only when ordered.

(Continued on following page)

GENERAL RAILWAY SIGNAL COMPANY October 1925

Marker Lights and Electric Lamps

Drawing references are shown for convenience in checking shipping lists and invoices.

Fig. No.	Name	Drawing Reference
	Order by plate, figure number and name	
A	Marker Light Unit Complete, as shown, together with lamp bracket, Fig. E, and flexible conduit, Fig. D, for staggered mounting, center of lens 2′, 0″ to the left of center of mast. Includes doublet lens unit with 5″ standard, clear outer lens, and 3⅝″ inner red lens (1-B, 1-D, 1-E, 1-1, 1-2, 4-3). Does not include lamp bulb, transformer nor resistance unit	
A1	as above, except with lamp bracket, Fig. F, for vertical mounting directly in front of mast. (1-B, 1-D, 1-F, 1-1, 1-2, 4-3)	
B	Electric Lamp Complete, as shown, except without electric lamp bulb and transformer, for use as semaphore lamp. Includes doublet lens unit with 5″ standard, clear, outer lens, and 3⅝″ inner clear lens. (1-4, 3-5, 1-6)	50580–5
C	Sighting Device, for aligning marker lights and semaphore lamps with track	51120
D	Flexible Conduit Complete, ¾″ as shown, length as specified, or as required. Includes two bushings (2-9, 1-10)	
E	Lamp Bracket Complete, as shown, for 5″ pipe, for mounting marker light, 2′, 0″ to left of center of mast,—used for staggered marker light with color-light signals, types D, G and F	35651–2
E1	as above, except for mounting marker light 15″ to left of center of mast,—used for staggered marker light with type E color-light signal	
F	Lamp Bracket Complete, as shown, for 5″ pipe, for mounting marker light directly in front of mast	35651–3
G	Lamp Bracket Complete, as shown for 5″ pipe, for mounting marker light 15″ to right of center of mast,—used as vertical marker light with Type E color-light signals	
1	Background as shown, for use on marker light	49162–14
2	Hood as shown, for use on marker light	49127–6
3	Screw, No. 10—32x¼″, for fastening hood Fig. 2, to bezel ring of lens unit	4807

(Continued on following page)

October 1925 GENERAL RAILWAY SIGNAL COMPANY

Marker Lights and Electric Lamps

Drawing references are shown for convenience in checking shipping lists and invoices.

Fig. No.	Name	Drawing Reference
	Order by plate, figure number and name	
4	Case Complete, with hasp, staple, studs, pins and plain cover for Fig. B	48714–2
5	Bolt, 1/4″–20x7/8″, with nut and lock washer for fastening lens unit, Fig. 6, to case, Fig. 4	
6	Lens Unit Complete. For detail, see Plate H3001, Fig. B	
7	Lamp Bulb,—see Plate H1911 for order reference	
8	Transformer, Type K1/2,—see Plate P0102, Fig. A for order reference	
9	Bushing Complete as shown	
10	Flexible Conduit only, 3/4″. Length as specified	

GENERAL RAILWAY SIGNAL COMPANY October 1925

OBSOLETE See Section H, Part 39

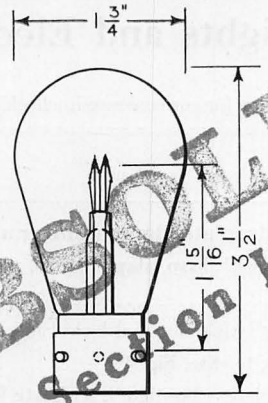

A-FOR USE WITH DOUBLET LENS ELECTRIC SEMAPHORE LAMP OR MARKER LIGHT

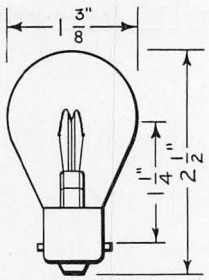

B-A.R.A. ST'D FOR ELECTRIC SEMAPHORE LAMPS

OBSOLETE See Section H, Part 39

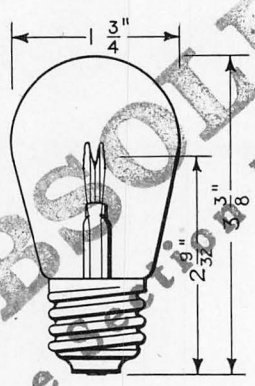

C-FOR USE WITH ELECTRIC SEMAPHORE LAMP

Electric Lamp Bulbs for Semaphore Lamps, Marker Lights

Section H, Part 21

Type D
Color Light Signals

Copyright 1925, General Railway Signal Company

Type D Color Light Signals

Foreword and General Order Information

A general description of our color-light signals is given in Bulletin No. 144 and we urge our customers to read this Bulletin carefully before ordering, since there are a number of features of construction and use given that will be an aid in securing equipment best adapted to your needs.

The most common Aspects and Indications for the Type D signal are shown on pages 19, 20, 21 and 22 of Bulletin No. 144, but we will furnish equipment for giving any indications that you may desire to use.

Unless otherwise stated in the following lists, a signal unit is understood to mean the unit complete, including background, hoods and adjusting bracket, as shown on Plate H2113, but without lamps and transformers.

Lamps and transformers are not included with any of the signals nor signal units listed, but must be ordered separately. Experience indicates that this method of ordering is to the advantage of all concerned. Lamps are shown on Plate H3011 and transformers are shown on Plate P0102, Volume 4.

Transformers will be mounted in doublet lens signal units before shipment when specified.

Signal foundations, number plates and marker lights are shown in the following plates for the purpose of illustrating the method of mounting only and are not included with the signal complete as listed. See Plates H2113 and H1905 for Marker Lights and Plate H1715 for Number Plates and order separately.

Unless otherwise specified, signals will be furnished in recommended heights as shown.

Unless otherwise specified, signal units will be furnished with color and position of lenses as follows:

3 INDICATION UNIT		2 INDICATION UNIT		1 INDICATION UNIT	
Upper Lens	Green	Upper Lens	Yellow	Lens	Red
Center Lens	Yellow	Lower Lens	Red		
Lower Lens	Red				

Signals equipped with doublet lenses are regularly furnished with lenses that give a 20° downward spread and a 3° spread to either side of axial beam. Outer Spredlite lenses are available which may be used in place of the regular outer lens and which give a greater side spread than 3°. These lenses are used principally in signals located

(Continued on following page)

on curves and are furnished when specified to give either a 6° spread to either side of axial beam or a 15° spread to either side.

Doublet Lens Units are shown on Plate H3001.

Signal units are regularly furnished without back lights but back lights will be furnished when specified.

Relay cases shown with signals complete, are listed with shelving as specified for the reason that requirements are so varied as to make a standard arrangement impractical. Furnish a sketch of the shelving desired, or a list, and the arrangement of the apparatus to be located in the relay case. Other relay cases than those listed with the signal complete are shown and listed in Section E, Part 9.

PLATE H2101

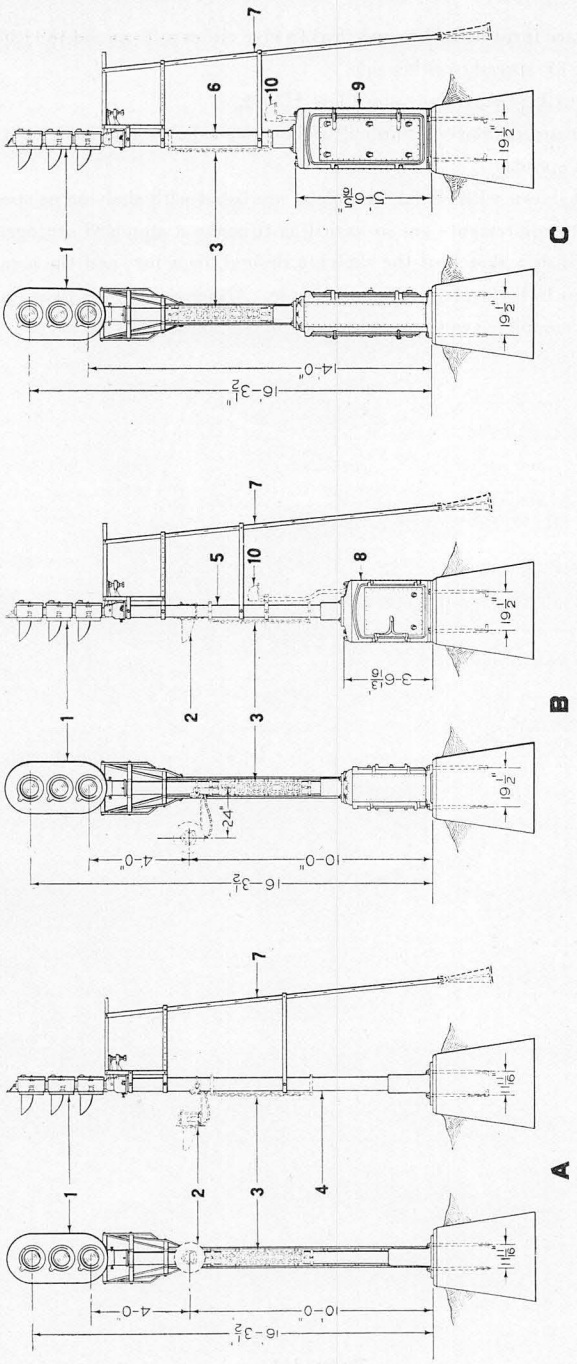

Type D Color Light Ground Signal—One Signal Unit

October 1925 GENERAL RAILWAY SIGNAL COMPANY

Type D Color Light Ground Signals

Note: See foreword and order information, page 210, at the beginning of this part.

Drawing references are shown for convenience in checking shipping lists and invoices.

Fig. No.	Name	Drawing Reference
	Order by plate, figure number and name	
A	Type D Color-light Ground Signal Complete, consisting of one three-indication signal unit equipped with 8 3/8″ doublet lenses and mounted on mast as shown. Marker light, number plate and anchor bolts are not included	
B	Type D Color-light Ground Signal Complete, consisting of one three-indication signal unit equipped with 8 3/8″ doublet lenses and mounted on mast supported on double door relay case as shown. Marker light, number plate, cable outlet and anchor bolts are not included. Specify shelving desired in relay case	
B1	as above, except mounted on single door relay case shown on Plate E0915, Fig. A	
C	Type D Color-light Ground Signal Complete, consisting of one three-indication signal unit equipped with 8 3/8″ doublet lenses and mounted on mast supported on large double door relay case as shown. Marker light, number plate, cable outlet and anchor bolts are not included. Specify shelving desired in relay case	
C1	as above, except mounted on a double relay and instrument case shown on Plate E0917, Fig. A	
1	Type D Three-indication Signal Unit Complete. For details see Plates H2113 and H2115	
2	Marker Light. See Plates H2113 and H1905 for order reference	
3	Number Plate. See Plate H1715 for order reference	
4	Mast, 12′, 10″ long, of 5″ pipe, with A. R. A. base for mounting on foundation as shown in Fig. A	
5	Mast, 9′, 3″ long, of 5″ pipe with base for mounting on relay case as shown in Fig. B	

(Continued on following page)

GENERAL RAILWAY SIGNAL COMPANY October 1925

Type D Color Light Ground Signals

Drawing references are shown for convenience in checking shipping lists and invoices.

Fig. No.	Name	Drawing Reference
6	Mast, 7′, 4″ long, of 5″ pipe, with base for mounting on large relay case as shown in Fig. C	
7	Ladder Complete, includes hand rails, platform, stays, clamps, and bolts. Does not include foundation	
8	Relay Case Complete, 3′, 6 13/16″ high, by 2′, 5 1/2″ wide, by 16″ deep, with door on each side as shown, and with shelving as specified	
8a	as above, except with door on one side only	
9	Relay Case Complete, 5′, 6 5/16″ high, by 2′, 5 1/2″ wide, by 16″ deep, with door on each side, as shown, and with shelving as specified	
10	Cable Outlet Complete, with conduit, length as specified	

Memoranda

PLATE H2103

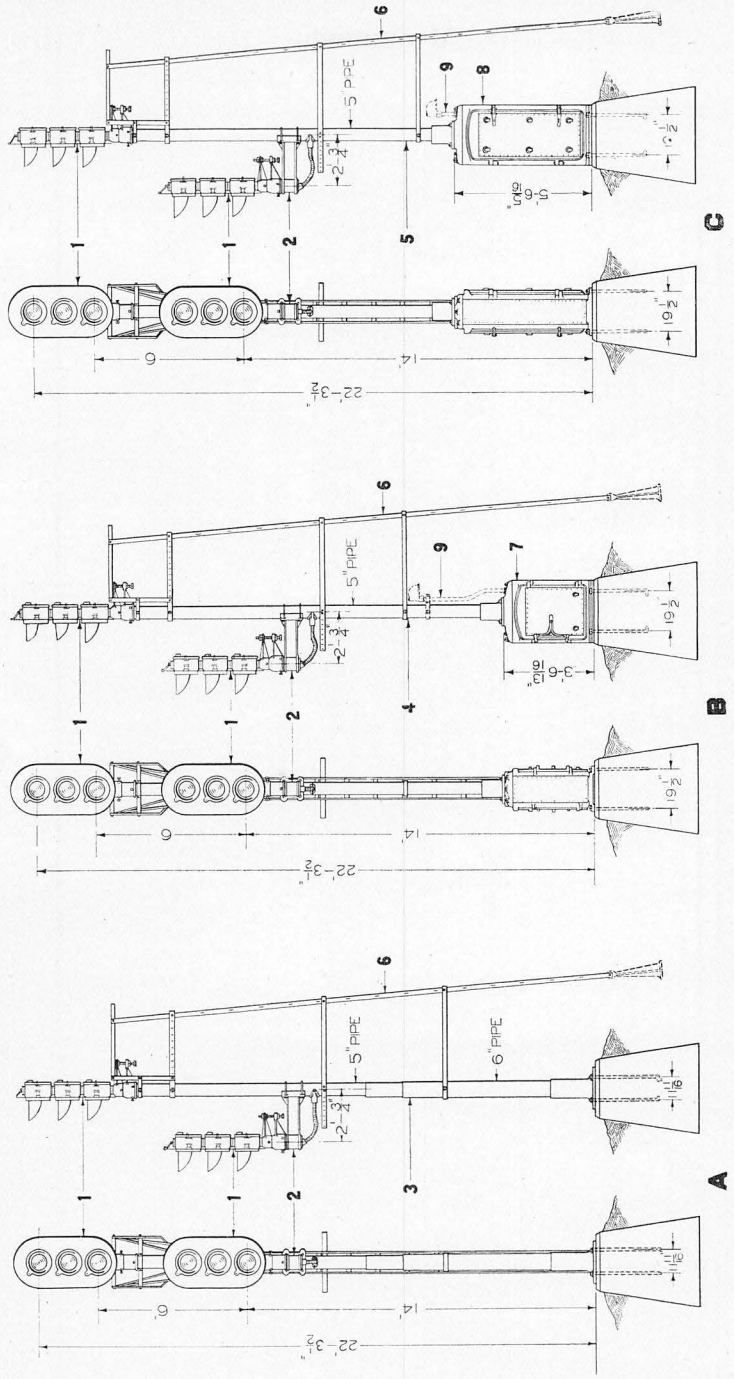

Type D Two-Unit Color Light Ground Signals

October 1925 GENERAL RAILWAY SIGNAL COMPANY

Type D Color Light Ground Signals

Note: See foreword and order information, page 210, at the beginning of this part.

Drawing references as shown for convenience in checking shipping lists and invoices.

Fig. No.	Name	Drawing Reference
	Order by plate, figure number and name	
A	Type D Color-light Ground Signal Complete, consisting of two three-indication signal units equipped with 8⅜″ doublet lenses and mounted on mast as shown	
A1	as above, except lower signal unit is a two-indication unit	
B	Type D Color-light Ground Signal Complete, consisting of two three-indication signal units equipped with 8⅜″ doublet lenses and mounted on mast supported on double door relay case as shown. Cable outlet and anchor bolts are not included. Specify shelving desired in relay case	
B1	as above, except lower signal unit is a two-indication unit	
B2	same as Fig. B, except mast is supported on a single door relay case shown on Plate E0915, Fig. A	
B3	same as Fig. B1, except mast is supported on a single door relay case shown on Plate E0915, Fig. A	
C	Type D Color-light Ground Signal Complete, consisting of two three-indication signal units equipped with 8⅜″ doublet lenses and mounted on mast supported on large double door relay case as shown. Cable outlet and anchor bolts are not included. Specify shelving desired in relay case	
C1	as above, except lower signal unit is a two-indication unit	
C2	same as Fig. C, except mounted on a double relay and instrument case shown on Plate E0917, Fig. A	
C3	same as Fig. C1, except mounted on a double relay and instrument case shown on Plate E0917, Fig. A	
1	Type D Three-indication Signal Unit Complete. For details see Plates H2113 and H2115	
2	Bracket Complete, with U bolts for mounting to 5″ mast, includes flexible conduit connection	
3	Mast, 18′, 10″ long, of 5″ and 6″ pipe, with A. R. A. base for mounting on foundation as shown in Fig. A	

(Continued on following page)

GENERAL RAILWAY SIGNAL COMPANY October 1925

Type D Color Light Ground Signals

Drawing references are shown for convenience in checking shipping lists and invoices.

Fig. No.	Name	Drawing Reference
	Order by plate, figure number and name	
4	Mast, 15′, 6″ long, of 5″ pipe, with base for mounting on relay case as shown in Fig. B	
5	Mast, 13′, 4″ long, of 5″ pipe, with base for mounting on relay case as shown in Fig. C	
6	Ladder Complete, includes hand rail, platforms, stays, clamps and bolts. Does not include foundation	
7	Relay Case Complete, 3′, $6\frac{13}{16}$″ high, by 2′, $5\frac{1}{2}$″ wide, by 16″ deep, with door on each side, as shown, and with shelving as specified	
7a	as above, except with door on one side only	
8	Relay Case Complete, 5′, $6\frac{5}{16}$″ high, by 2′, $5\frac{1}{2}$″ wide, by 16″ deep, with door on each side as shown, and with shelving as specified	
9	Cable Outlet Complete, with conduit, length as specified	

Memoranda

PLATE H2105

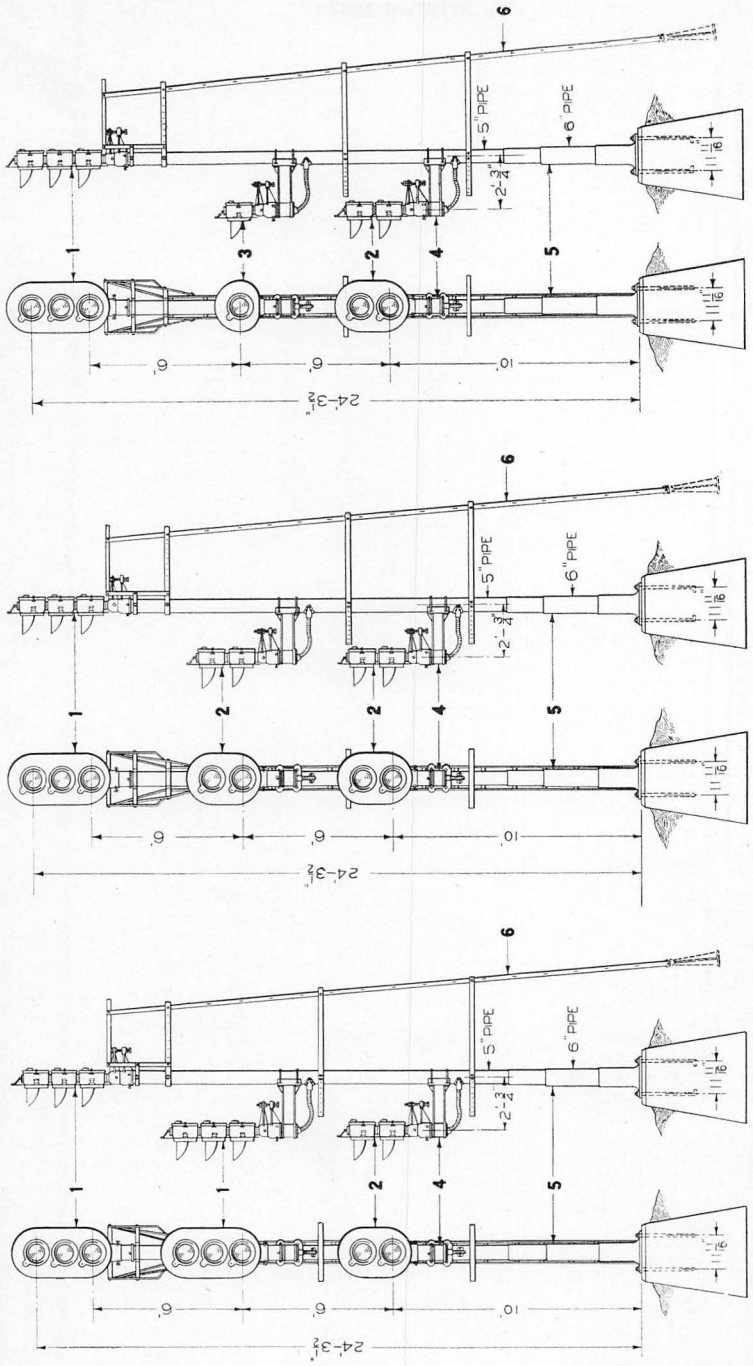

Type D Three-Unit Color Light Ground Signals

October 1925 GENERAL RAILWAY SIGNAL COMPANY

Type D Color Light Ground Signals

Note: See foreword and order information, page 210, at the beginning of this part.

Drawing references are shown for convenience in checking shipping lists and invoices.

Fig. No.	Name	Drawing Reference
	Order by plate, figure number and name	
A	Type D Color-light Ground Signal Complete, consisting of two three-indication signal units and one two-indication signal unit, equipped with 8⅜″ doublet lenses and mounted on mast as shown	
B	Type D Color-light Ground Signal Complete, consisting of one three-indication signal unit and two two-indication signal units, equipped with 8⅜″ doublet lenses and mounted on mast as shown	
C	Type D Color-light Ground Signal Complete, consisting of one three-indication signal unit, one fixed indication signal unit and one two-indication signal unit, equipped with 8⅜″ doublet lenses and mounted on mast as shown	
1	Type D Three-indication Signal Unit Complete. For details see Plates H2113 and H2115	
2	Type D Two-indication Signal Unit Complete. For details see Plates H2113 and H2115	
3	Type D One-indication Signal Unit Complete. For details see Plates H2113 and H2115	
4	Bracket Complete with U bolts for mounting to 5″ mast, includes flexible conduit connection	
5	Mast, 20′, 10″ long, of 5″ and 6″ pipe, with A. R. A. base for mounting as shown	
6	Ladder Complete, includes hand rail, platforms, stays, clamps and bolts. Does not include foundation	

GENERAL RAILWAY SIGNAL COMPANY October 1925

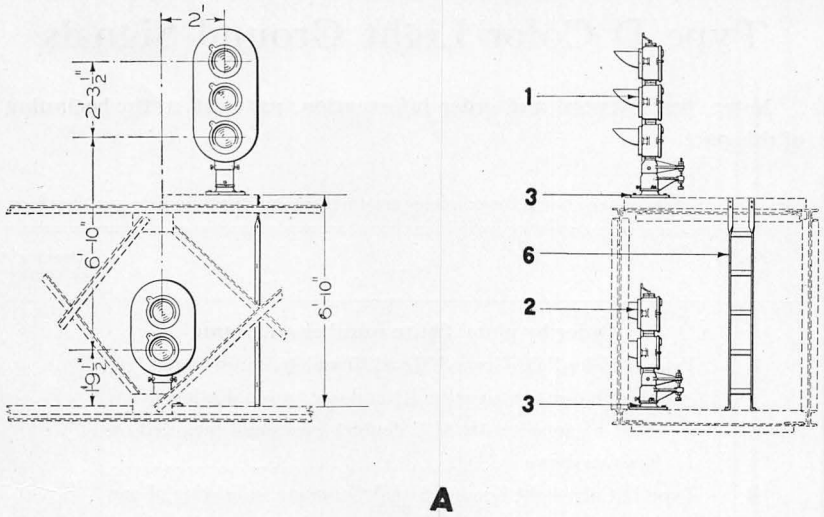

A

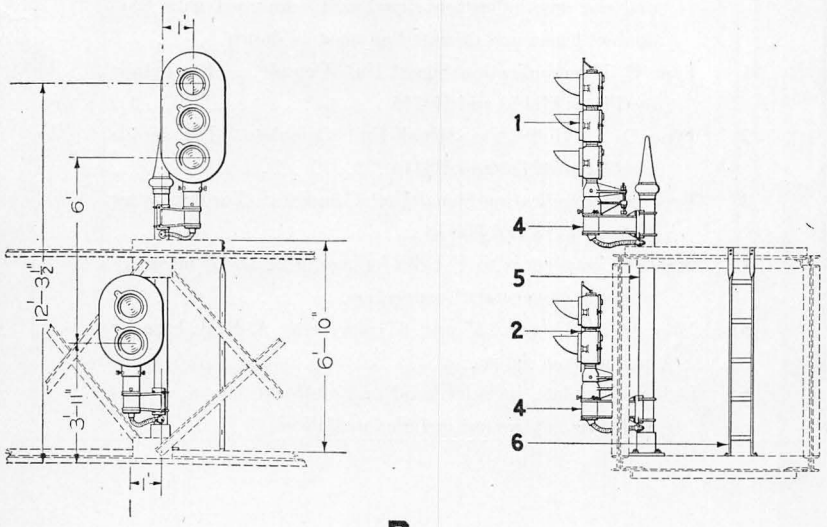

B

Type D Color Light Bridge Signals, Automatic

October 1925 GENERAL RAILWAY SIGNAL COMPANY

Type D Color Light Bridge Signals

Note: See foreword and order information, page 210, at the beginning of this part. The material listed in this plate does not include any bridge fixtures nor bolts for attaching signals to same.

Drawing references are shown for convenience in checking shipping lists and invoices.

Fig. No.	Name	Drawing Reference
	Order by plate, figure number and name	
A	Type D Color-light Bridge Signal Complete, consisting of one three-indication signal unit and one two-indication signal unit, equipped with 8⅜″ doublet lenses and with bases and ladder for mounting as shown	
B	Type D Color-light Bridge Signal Complete consisting of one three-indication signal unit and one two-indication signal unit, equipped with 8⅜″ doublet lenses and bracket mounted to a short mast, as shown. Includes mast, mounting brackets and ladder	
1	Type D Three-indication Signal Unit Complete. For details see Plates H2113 and H2115	
2	Type D Two-indication Signal Unit Complete. For details see Plates H2113 and H2115	
3	Base, for mounting signal unit on bridge as shown	21211–3
4	Bracket Complete, with U bolts for mounting to a 5″ mast, includes flexible conduit connection	
5	Mast, length as specified, of 5″ pipe with base for mounting as shown	
6	Ladder, length as specified	

GENERAL RAILWAY SIGNAL COMPANY October 1925

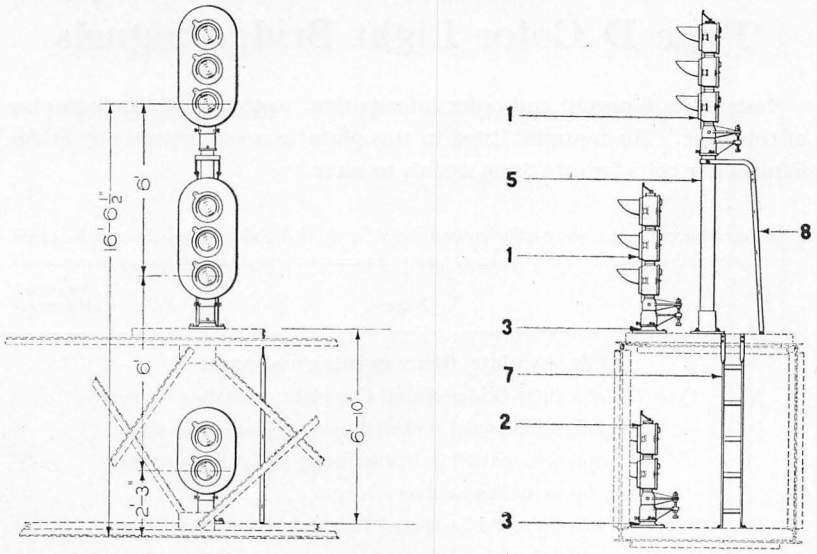

A

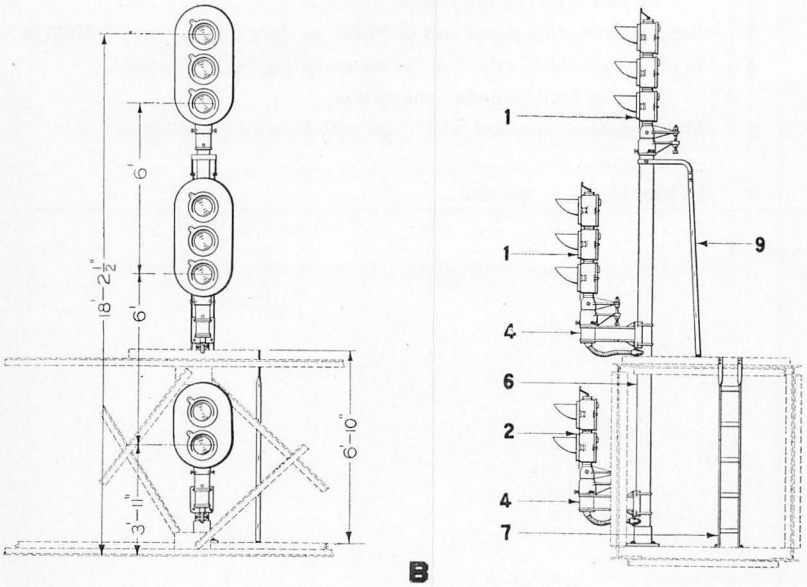

B

Type D Color Light Bridge Signals, Interlocking

October 1925 GENERAL RAILWAY SIGNAL COMPANY

Type D Color Light Bridge Signals

Note: See foreword and order information, page 210, at the beginning of this part.

The material listed in this plate does not include any bridge fixtures nor bolts for attaching signals to same.

Drawing references are shown for convenience in checking shipping lists and invoices.

Fig. No.	Name	Drawing Reference
	Order by plate, figure number and name	
A	Type D Color-light Bridge Signal Complete, consisting of two three-indication signal units and one two-indication signal unit, equipped with 8⅜″ doublet lenses. Includes mast 6′, 8″ long, bases and ladders for mounting as shown	
B	Type D Color-light Bridge Signal Complete, consisting of two three-indication signal units and one two-indication signal unit, equipped with 8⅜″ doublet lenses and mounted to mast as shown. Includes mast, 14′, 2″ long, mounting brackets and ladders	
1	Type D Three-indication Signal Unit Complete. For details see Plates H2113 and H2115	
2	Type D Two-indication Signal Unit Complete. For details see Plates H2113 and H2115	
3	Base, for mounting signal unit on bridge as shown	21211–3
4	Bracket Complete, with U bolts for mounting to a 5″ mast, includes flexible conduit connection	46668–1
5	Mast Complete, 6′, 3″ long, of 5″ pipe	
6	Mast Complete, 14′, 2″ long, of 5″ pipe	
7	Ladder, 6′, 10″ long, for bridges in Figs. A and B	
8	Ladder for upper unit, Fig. A	
9	Ladder for upper unit, Fig. B	

PLATE H2111

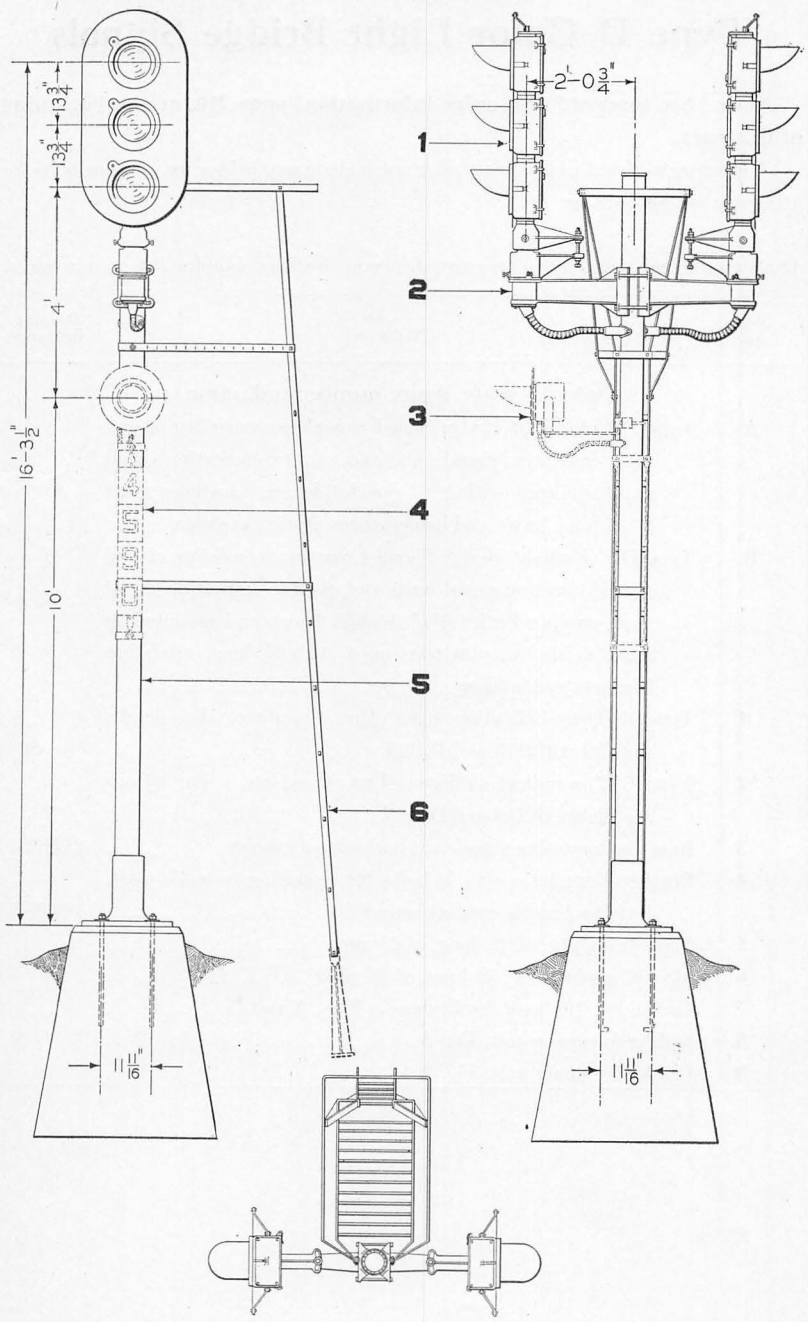

A - SIGNAL COMPLETE

Type D Color Light Two Direction Ground Signal

October 1925 GENERAL RAILWAY SIGNAL COMPANY

Type D Color Light Ground Signal

Two-Direction

Note: See foreword and order information, page 210, at the beginning of this part.

Drawing references are shown for convenience in checking shipping lists and invoices.

Fig. No.	Name	Drawing Reference
	Order by plate, figure number and name	
A	Type D Color-light Two-direction Ground Signal Complete, consisting of two three-indication signal units equipped with 8 3/8″ doublet lenses and bracket mounted to mast as shown. Marker lights, number plates and anchor bolts are not included	
1	Type D Three-indication Signal Unit Complete. For details see Plates H2113 and H2115	
2	Bracket Complete, for mounting to a 5″ mast, includes flexible conduit connection and necessary bolts	
3	Marker Light. See Plates H2113 and H1905 for order reference	
4	Number Plate. See Plate H1715 for order reference	
5	Mast, 14′, 6″ long, of 5″ pipe with A. R. A. base for mounting as shown	
6	Ladder Complete, includes hand rails, platform, stays, clamps and bolts. Does not include foundation	

PLATE H2113

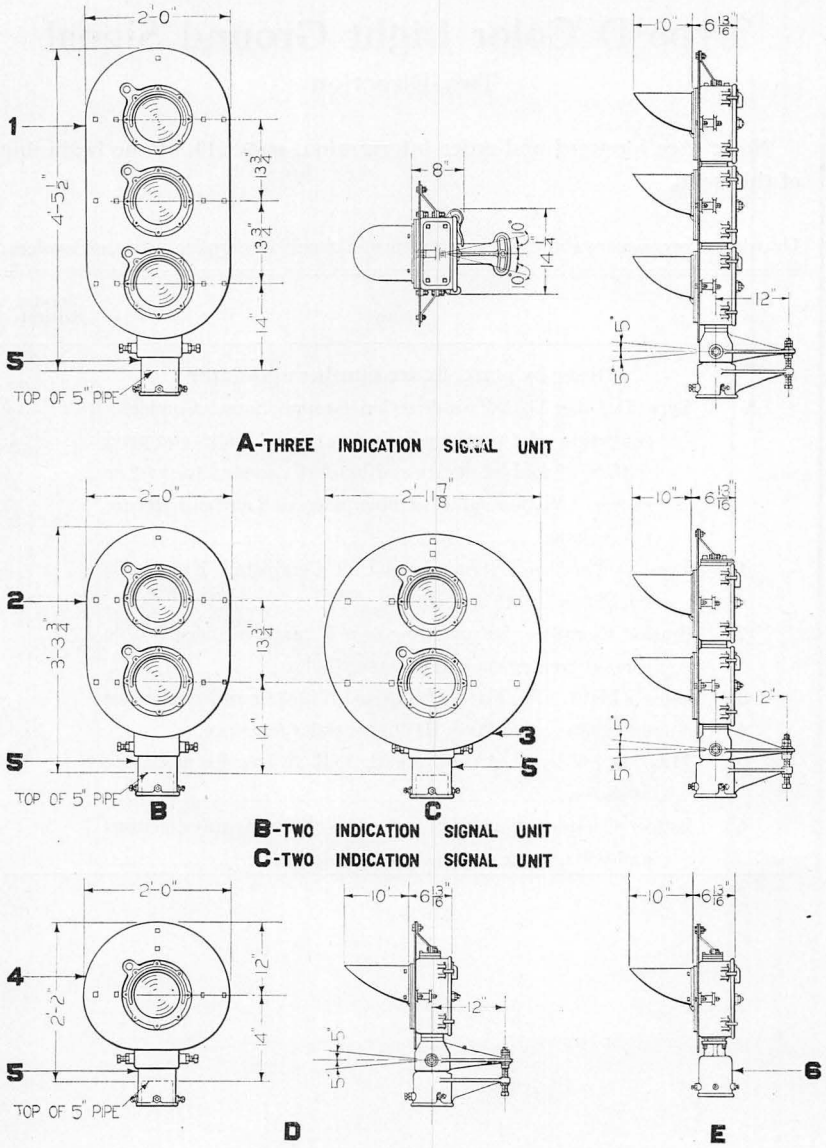

Type D Color Light Signal

Type D Color Light Signal Units

Note: See foreword and order information, page 210, at the beginning of this part. The one-indication signal unit shown in Fig. D is recommended for use as a marker light.

Unless otherwise specified signals will be furnished without backlights.

Drawing references are shown for convenience in checking shipping lists and invoices.

Fig. No.	Name	Drawing Reference
	Order by plate, figure number and name	
A	Type D Three-indication Color-light Signal Unit Complete, equipped with 8 3/8" doublet lenses, background, hoods and adjusting bracket as shown. Does not include lamp bulbs, transformers nor resistance units	36722–10
A1	as above, except without background	36722–9
B	Type D Two-indication Color-light Signal Unit Complete, equipped with 8 3/8", doublet lenses, elliptical background, hoods and adjusting bracket as shown. Does not include lamp bulbs, transformers nor resistance units	
B1	as above, except without background	36722–11
C	Type D Two-indication Color-light Signal Unit Complete, equipped with 8 3/8" doublet lenses, circular background, hoods and adjusting bracket as shown. Does not include lamp bulbs, transformers nor resistance units	
D	Type D One-indication Color-light Signal Unit Complete, with 8 3/8" doublet lens, background, hood and adjusting bracket as shown. Does not include lamp bulb, transformer nor resistance unit	
D1	as above, except with circular background 3' in diameter	
D2	as above, except without background	
E	Type D One-indication Color-light Signal Unit Complete, equipped with 8 3/8" doublet lens, background, hood and mounting socket as shown. Does not include lamp bulb, transformer nor resistance unit	36722–6
E1	as above, except without background	

(Continued on following page)

GENERAL RAILWAY SIGNAL COMPANY October 1925

Type D Color Light Signal Units

Drawing references are shown for convenience in checking shipping lists and invoices.

Fig. No.	Name	Drawing Reference
	Order by plate, figure number and name	
1	Background Complete, with braces, bolts, nuts, etc., for three-indication Type D signal unit, as shown in Fig. A.....	49163–1
2	Elliptical Background Complete, with braces, bolts, nuts, etc., for two-indication Type D signal unit as shown in Fig B..	49163–2
3	Circular Background Complete, with braces, bolts, nuts, etc., for two-indication Type D signal unit, as shown in Fig. C..	49163–11
4	Background Complete, with braces, bolts, nuts, etc., for one-indication, Type D signal unit, as shown in Figs. D and E.	49163–3
5	Adjusting Bracket Complete, with bolts for mounting a signal unit on a 5″ mast. For sectional view see Plate H2115, Fig. B.....	46668–3
6	Socket Complete, with bolts, for mounting a signal unit on a 5″ mast.....	28477–1

Memoranda

PLATE H2115

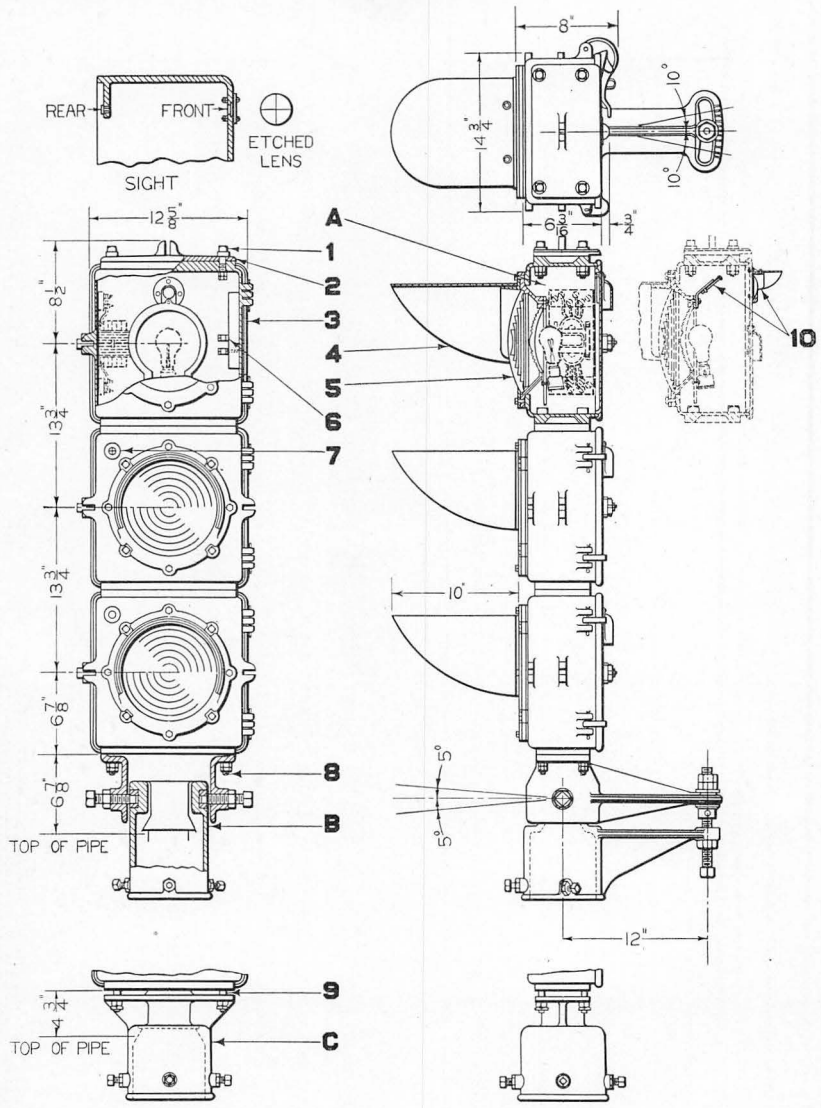

Type D Three Indication Light Signal Unit

October 1925 GENERAL RAILWAY SIGNAL COMPANY

Type D Color Light Signal Units

Note: See foreword and order information, page 210, at the beginning of this part.

This plate is included to show details of construction and for convenience in ordering repair parts.

For signal units complete, see Plate H2113.

Unless otherwise specified lamp cases will be furnished for use without backlights.

Drawing references are shown for convenience in checking shipping lists and invoices.

Fig. No.	Name	Drawing Reference
	Order by plate, figure number and name	
A	Lamp Case Complete, as shown, includes case, doublet lens unit, hood and bolts. The doublet lens unit includes an 8⅜″ diameter outer clear lens, a 5½″ diameter inner colored lens, bezel rings and lamp receptacle. Specify color of lens. Lamp and transformer are not included. See Plate H3011 for lamp bulbs and Plate P0102 for transformers. Includes (4-1, 1-2, 1-3, 1-4, 1-5, 2-6.)	
B	Adjusting Bracket Complete, as shown	
C	Mounting Socket Complete, as shown	
1	Bolt, ½″–13x2¼″ sq. hd. with hex. nut and pal nut, for fastening plate Fig. 2 to case Fig. 3	
2	Plate, used as cover for lamp case	36761
3	Case, includes terminal block. Specify sighting glass if desired	27470–1
4	Hood only	49127–1
5	Doublet Lens Unit. See Plate H3001, Fig. A	
6	Connector Complete, two post	18643–3
6a	as above, except four post connector	18643–7
7	Sighting Glass Complete	
8	Bolt, ½″–13x2¾″ sq. hd. with hex. nut and pal nut, for fastening case to adjusting bracket	
9	Bolt, ½″–13x2″ sq. hd. with hex. nut and pal nut, for fastening case to mounting socket	
10	Back Light Complete, includes mirror, 2″ lens, bezel ring, small hood and screws for mounting	

Memoranda

Section H, Part 22

Type E
Color Light Signals

Copyright 1925, General Railway Signal Company

Type E Color Light Signal

Foreword and General Order Information

A general description of our color-light signals is given in Bulletin No. 144 and we urge our customers to read this Bulletin carefully before ordering since there are a number of features of construction and use given that will be an aid in securing equipment best adapted to your needs.

The aspects and indications most generally used are shown on pages 19, 20, 21 and 22 of Bulletin 144 and a system of aspects and indications with reserve indications is shown on pages 29 and 30 of the same Bulletin. Type E signals are cataloged in layouts suitable for using the indications referred to but we will furnish equipment arranged for giving any indications that you may desire to use.

Unless otherwise stated in the following lists a signal unit is understood to mean the unit complete including background, hoods, support and adjusting bracket as shown on Plate H2209, but without lamps and transformers.

Lamps and transformers are not included with any of the signals nor signal units listed but must be ordered separately. Lamps are shown on Plate H3015 and transformers are shown on Plate P0102, Volume 4. These transformers will be mounted in the doublet lens type of signal units before shipment when specified.

Signal foundations, number plates and marker lights are shown in the following plates for the purpose of illustrating the method of mounting only and are not included with the signals complete as listed. See Plates H2113 and H1905 for Marker Lights and Plate H1715 for Number Plates and order separately.

Unless otherwise specified, signals will be furnished in recommended heights as shown.

Unless otherwise specified, signal units will be furnished with color and position of lenses as follows:

3 INDICATION UNIT	2 INDICATION UNIT	1 INDICATION UNIT
Left Lens—Green Center Lens—Yellow Right Lens—Red	Lens in Center of background—Yellow Right Lens—Red	Red Lens Located either on the right or left side as specified

Signals equipped with doublet lenses are regularly furnished with lenses that give a 20° downward spread and a 3° spread to either side of axial beam. Outer Spredlite lenses are available which may be used in place of the regular outer lens and which give a greater side spread than 3°. These lenses are used principally in signals located

(Continued on following page)

on curves and are furnished when specified to give either a 6° spread to either side of axial beam or a 15° spread to either side.

Doublet Lens Units are shown on Plate H3001.

Signal units are regularly furnished without back lights but back lights will be furnished when specified.

Relay cases shown with signals complete, are listed with shelving as specified for the reason that requirements are so varied as to make a standard arrangement impractical. Furnish a sketch of the shelving desired, or a list, and the arrangement of the apparatus to be located in the relay case. Other relay cases than those listed with the signal complete are shown and listed in Section E, Part 9.

Any of the signals listed in the following plates will be furnished, when specified, with additional light units as shown on Plate H2209, Fig. B for giving reserve indications.

PLATE H2201

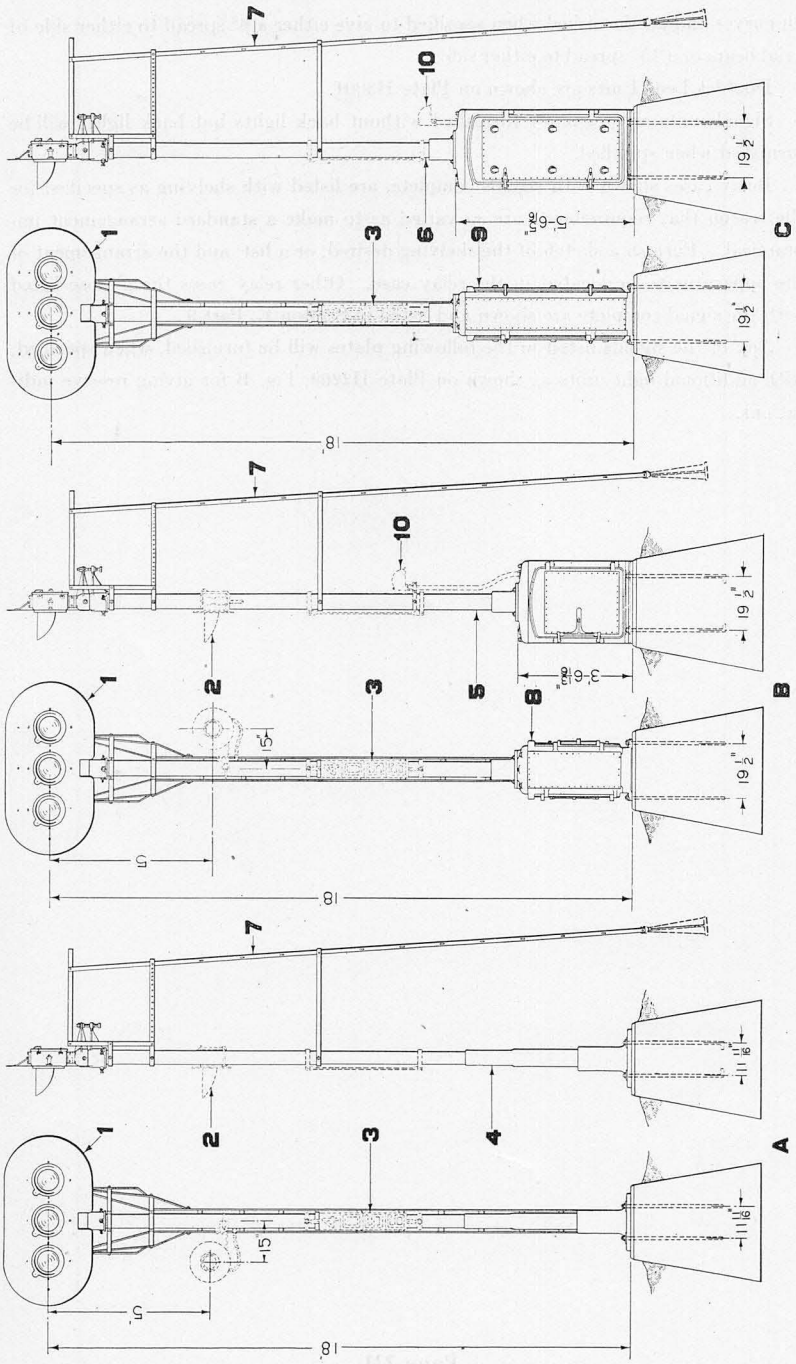

Type E Single-Unit Three-Indication Ground Signal

October 1925 GENERAL RAILWAY SIGNAL COMPANY

Type E Color Light Ground Signals

Note: See foreword and order information, page 220, at the beginning of this part.

Drawing references are shown for convenience in checking shipping lists and invoices.

Fig. No.	Name	Drawing Reference
	Order by plate, figure number and name	
A	Type E Color-light Ground Signal Complete, consisting of one three-indication signal unit equipped with 8 3/8″ doublet lenses and mounted on masts as shown. Marker light, number plate and anchor bolts are not included.....	
B	Type E Color-light Ground Signal Complete, consisting of one three-indication signal unit equipped with 8 3/8″ doublet lenses and mounted on mast supported on double door relay case as shown. Marker light, number plate, cable outlet and anchor bolts are not included. Specify shelving desired in relay case.....	
B1	as above, except mounted on signal door relay case shown on Plate E0915, Fig. A.....	
C	Type E Color-light Ground Signal Complete, consisting of one three-indication signal unit equipped with 8 3/8″ doublet lenses and mounted on large double door relay case as shown. Number plate, cable outlet and anchor bolts are not included. Specify shelving desired in relay case.....	
C1	as above, except mounted on a double relay and instrument case shown on Plate E0917, Fig. A.....	
1	Type E Three-indication Signal Unit Complete. For details see Plates H2209 and H2211.....	
2	Marker Light. See Plates H2113 and H1905 for order reference.	
3	Number Plate. See Plate H1715 for order reference.....	
4	Mast, 16′, 8″ long, of 5″ and 6″ pipe, with A. R. A. base for mounting on foundation as shown in Fig. A.....	
5	Mast, 13′, 1″ long, of 5″ pipe, with base for mounting on relay case as shown in Fig. B.....	
6	Mast, 11′, 2″ long, of 5″ pipe with base for mounting on relay case as shown in Fig. C.....	

(Continued on following page)

GENERAL RAILWAY SIGNAL COMPANY October 1925

Type E Color Light Ground Signals

Drawing references are shown for convenience in checking shipping lists and invoices.

Fig. No.	Name	Drawing Reference
	Order by plate, figure number and name	
7	Ladder Complete, includes hand rail, platform, stays, clamps and bolts. Does not include foundation	
8	Relay Case Complete, 3′, 6 13/16″ high, by 2′, 5 1/2″ wide, by 16″ deep, with door on each side as shown, and with shelving as specified	
8a	as above, except with door on one side only	
9	Relay Case Complete, 5′, 6 5/16″ high, by 2′, 5 1/2″ wide, by 16″ deep, with door on each side, as shown, and with shelving as specified	
10	Cable Outlet Complete with conduit, length as specified	

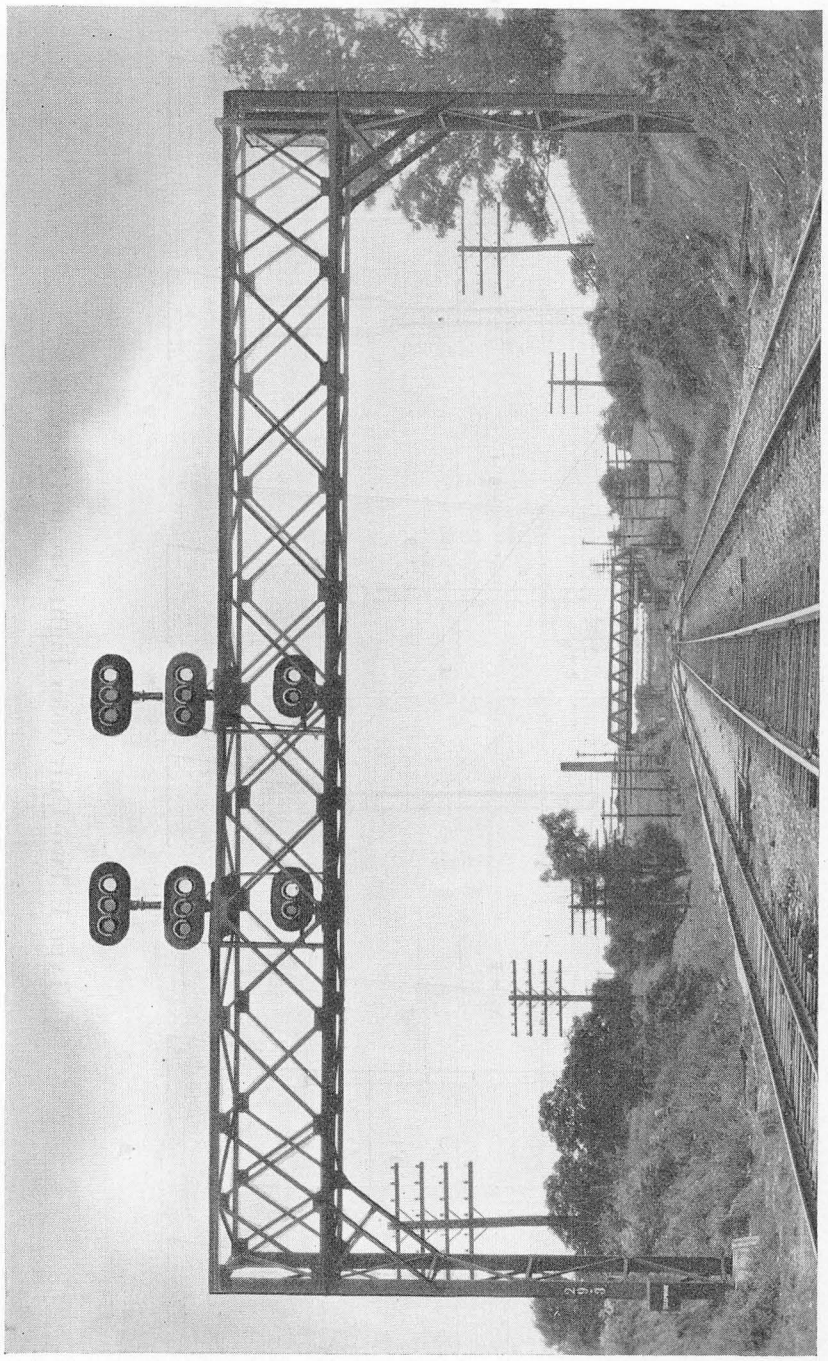

PLATE H2203

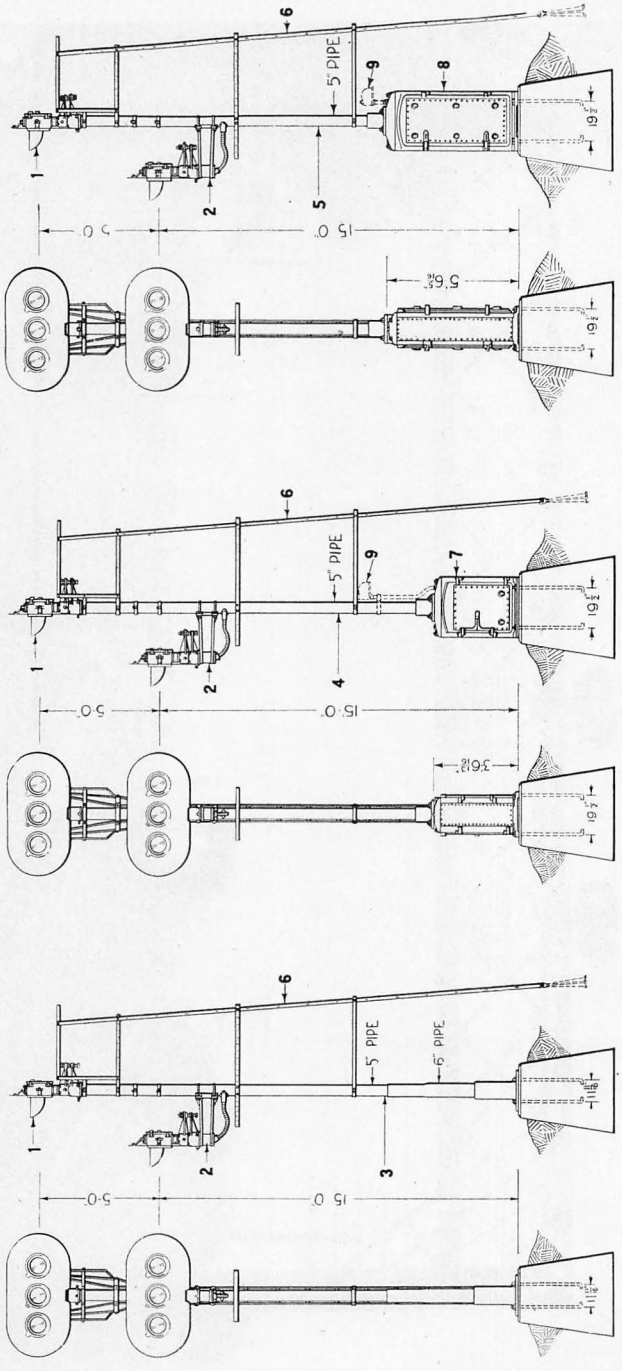

Type E Two-Unit Color Light Ground Signals

October 1925 GENERAL RAILWAY SIGNAL COMPANY

Type E Color Light Ground Signals

Note: See foreword and order information, page 220, at the beginning of this part.

Drawing references are shown for convenience in checking shipping lists and invoices.

Fig. No.	Name	Drawing Reference
	Order by plate, figure number and name	
A	Type E Color-light Ground Signal Complete, consisting of two three-indication signal units equipped with 8 3/8″ doublet lenses and mounted on mast as shown	
A1	as above, except lower signal unit is a two-indication unit	
B	Type E Color-light Ground Signal Complete, consisting of two three-indication signal units equipped with 8 3/8″ doublet lenses and mounted on mast supported on double door relay case as shown. Cable outlet and anchor bolts are not included. Specify shelving desired in relay case	
B1	as above, except lower signal unit is a two-indication unit	
B2	same as Fig. B, except mast is supported on single door relay case shown on Plate E0915, Fig. A	
B3	same as Fig. B1, except mast is supported on single door relay case shown on Plate E0915, Fig. A	
C	Type E Color-light Ground Signal Complete, consisting of two three-indication signal units equipped with 8 3/8″ doublet lenses and mounted on mast supported on large double door relay case as shown. Cable outlet and anchor bolts are not included. Specify shelving desired in relay case	
C1	as above, except lower signal unit is a two-indication unit	
C2	same as Fig. C, except mounted on a double relay and instrument case shown on Plate E0917, Fig. B	
C3	same as Fig. C1, except mounted on a double relay and instrument case shown on Plate E0917, Fig. A	
1	Type E Three-indication Signal Unit Complete. For details see Plates H2209 and H2211	
2	Bracket Complete, with U bolts for mounting to 5″ mast, includes flexible conduit connection	
3	Mast, 18′, 8″ long, of 5″ and 6″ pipe with A. R. A. base for mounting on foundation as shown in Fig. A	

(Continued on following page)

GENERAL RAILWAY SIGNAL COMPANY October 1925

Type E Color Light Ground Signals

Drawing references are shown for convenience in checking shipping lists and invoices.

Fig. No.	Name	Drawing Reference
	Order by plate, figure number and name	
4	Mast, 15′, 1″ long, of 5″ pipe with base for mounting on relay case as shown in Fig. B	
5	Mast, 13′, 2″ long, of 5″ pipe with base for mounting on relay case as shown in Fig. C	
6	Ladder Complete, includes hand rails, platforms, stays, clamps and bolts. Does not include foundation	
7	Relay Case Complete, 3′, 6 13/16″ high, by 2′, 5″ wide, by 16″ deep, with door on each side as shown, and with shelving as specified	
7a	as above, except with door on one side only	
8	Relay Case Complete, 5′, 6 5/16″ high, by 2′, 5 1/2″ wide, by 16″ deep with door on each side as shown, and with shelving as specified	
9	Cable Outlet Complete with conduit, length as specified	

Memoranda

PLATE H2205

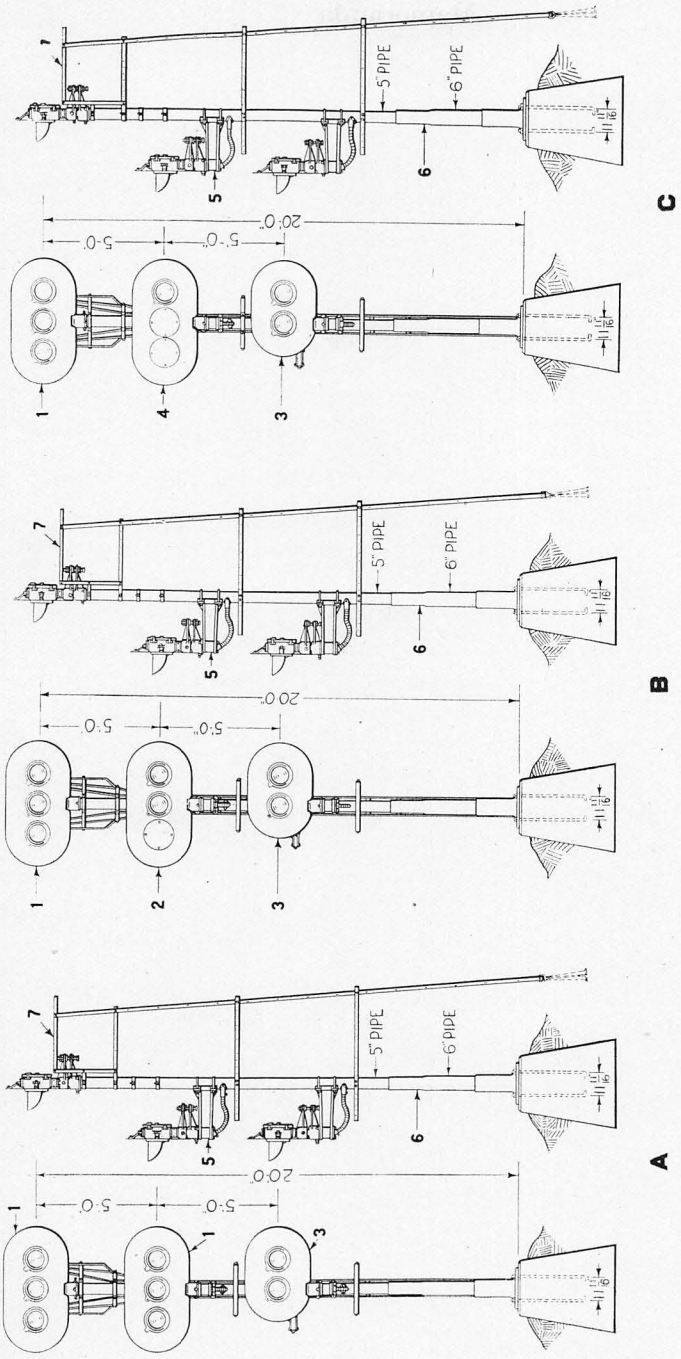

Type E Three-Unit Color Light Ground Signals

October 1925 GENERAL RAILWAY SIGNAL COMPANY

Type E Color Light Ground Signals

Note: See foreword and order information, page 220, at the beginning of this part.

Drawing references are shown for convenience in checking shipping lists and invoices.

Fig. No.	Name	Drawing Reference
	Order by plate, figure number and name	
A	Type E Color-light Ground Signal Complete, consisting of two three-indication signal units and one two-indication signal unit equipped with 8⅜″ doublet lenses and mounted on mast as shown	
B	Type E Color-light Ground Signal Complete, consisting of one three-indication signal unit and two two-indication signal units equipped with 8⅜″ doublet lenses and mounted on mast as shown	
C	Type E Color-light Ground Signal Complete, consisting of one three-indication signal unit, one fixed-indication signal unit and one two-indication signal unit equipped with 8⅜″ doublet lenses and mounted on mast as shown	
1	Type E Three-indication Signal Unit Complete. For details see Plates H2209 and H2211	36722–16
2	Type E Two-indication Signal Unit Complete, with three-indication signal unit background. For details see Plates H2209 and H2211	36722–15
3	Type E Two-indication Signal Unit Complete as shown. For details see Plates H2209 and H2211	
4	Type E One-indication Signal Unit Complete, with three-indication background. For details see Plates H2209 and H2211	
5	Bracket Complete, with U bolts for mounting to 5″ mast, includes flexible conduit connection	
6	Mast, 18′, 8″ long, of 5″ and 6″ pipe, with A. R. A. base for mounting as shown	
7	Ladder Complete, includes hand rail, platforms, stays, clamps and bolts. Does not include foundation	

PLATE H2207

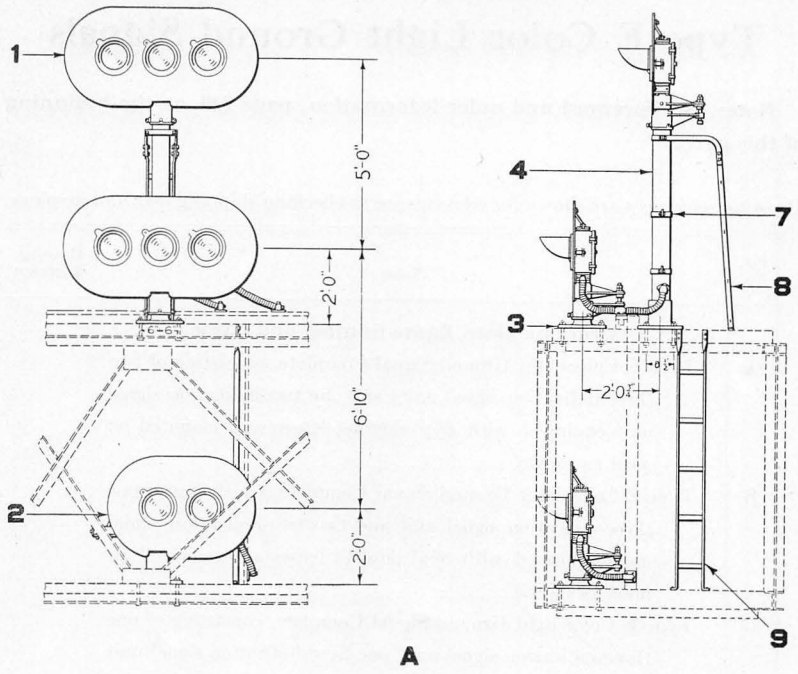

A

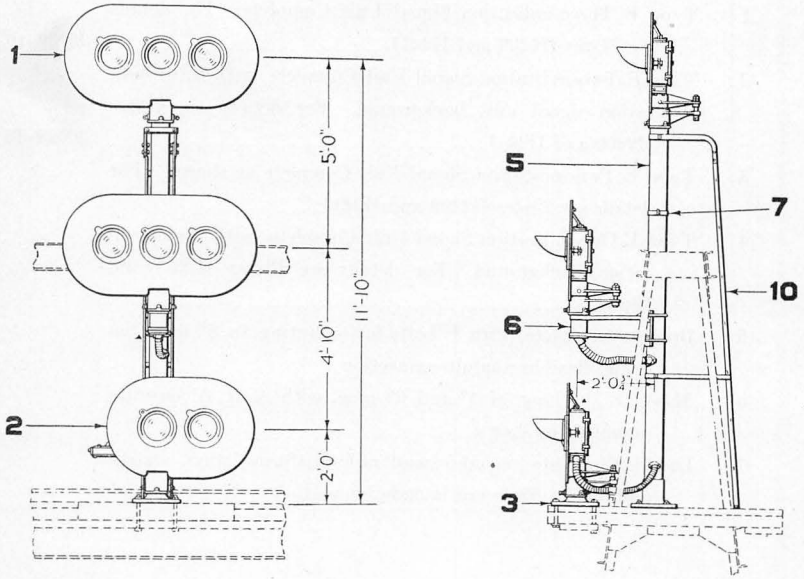

B

Type E Three-Unit Color Light Bridge Signals

October 1925 GENERAL RAILWAY SIGNAL COMPANY

Type E Color Light Bridge Signals

Note: See foreword and order information, page 220, at the beginning of this part.

The material listed in this plate does not include any bridge fixtures nor bolts for attaching signals. These fixtures can be furnished when we are given full information as to the construction of the bridge and the desired method of mounting.

Drawing references are shown for convenience in checking shipping lists and invoices.

Fig. No.	Name	Drawing Reference
	Order by plate, figure number and name	
A	Type E Color-light Bridge Signal Complete, consisting of two three-indication signal units and one two-indication signal unit equipped with 8 3/8″ doublet lenses and with bases, mast and ladders for mounting as shown	
B	Type E Color-light Bridge Signal Complete, consisting of two three-indication signal units and one two-indication signal unit equipped with 8 3/8″ doublet lenses and with mast, ladder, mounting bracket and base for mounting as shown.	
1	Type E Three-indication Signal Unit Complete. For details see Plates H2209 and H2211	36722–16
2	Type E Two-indication Signal Unit Complete. For details see Plates H2209 and H2211	36722–15
3	Base for mounting signal unit on bridge as shown	21211–3
4	Mast, 5′, 8″ long, of 5″ pipe, with base for mounting on bridge as shown	
5	Mast, 10′, 6″ long, of 5″ pipe, with base for mounting on bridge as shown	
6	Bracket Complete, with U bolts for mounting to 5″ mast, includes flexible conduit connection	
7	Pole Step Complete, for 5″ pipe	20416–2
8	Ladder Complete, for upper unit in Fig. A	309–8
9	Ladder Complete, as shown for Fig. A. Specify length	312–23
10	Ladder Complete, as shown for Fig. B	309–9

PLATE H2209

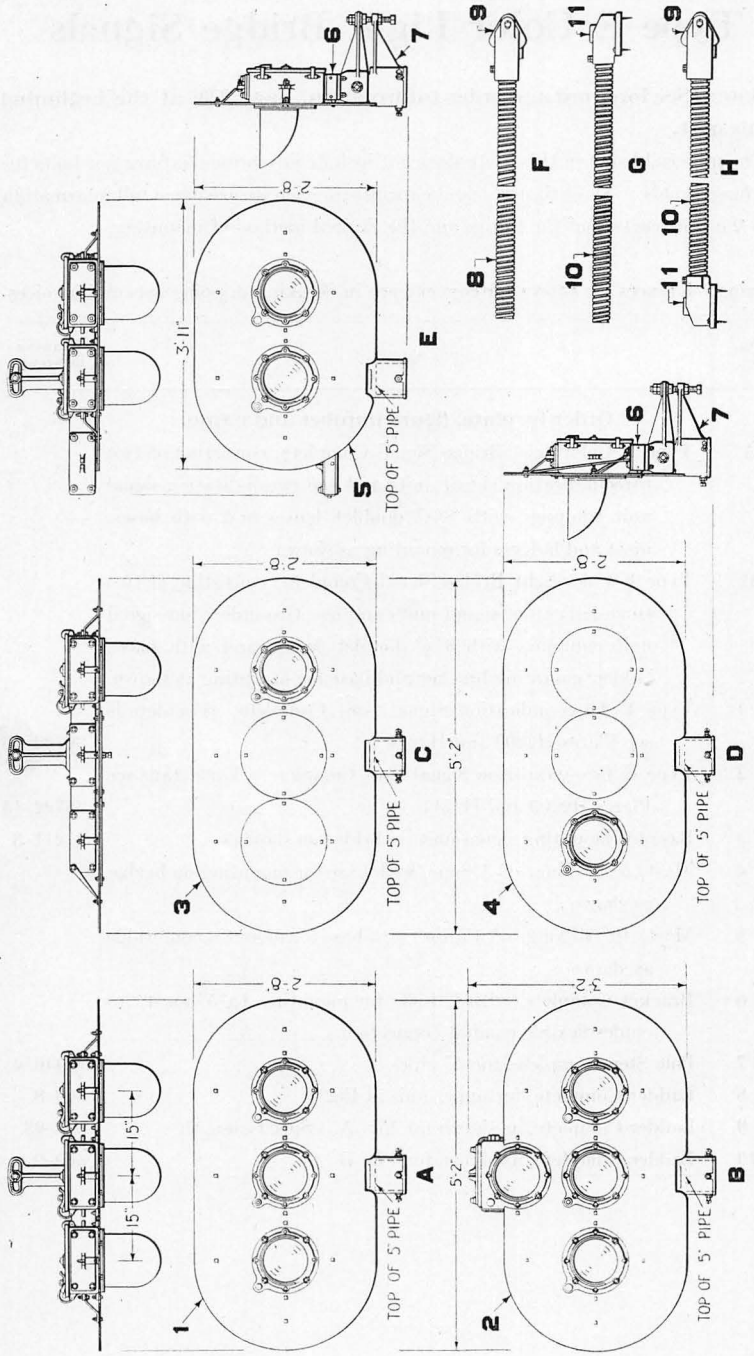

Type E Color Light Signal Units

October 1925 GENERAL RAILWAY SIGNAL COMPANY

Type E Color Light Signal Units

Note: See foreword and order information, page 220, at the beginning of this part.

Unless otherwise specified, signal units as listed below, are furnished for mounting to a mast, and are not equipped with conduit inlet, Plate H2211, Fig. 6.

Unless otherwise specified, signals will be furnished without backlights.

Drawing references are shown for convenience in checking shipping lists and invoices.

Fig. No.	Name	Drawing Reference
	Order by plate, figure number and name	
A	Type E Three-indication Color-light Signal Unit Complete, equipped with 8 3/8" doublet lenses, background, hoods, support and adjusting bracket, as shown. Does not include lamp bulbs, transformers nor resistance units	36722–16
A1	as above, except without background	
B	Type E Three-indication Color-light Signal Unit Complete, with reserve light unit, equipped with 8 3/8" doublet lenses, background, hoods, support and adjusting bracket as shown. Does not include lamp bulbs, transformers nor resistance units	36722–17
B1	as above, except without background	
C	Type E One-indication Color-light Signal Unit Complete, equipped with 8 3/8" doublet lens, background, hood, support and adjusting bracket as shown, light unit on right hand side. Does not include lamp bulb, transformer nor resistance unit	36722–14
D	Type E One-indication Color-light Signal Unit Complete, equipped with 8 3/8" doublet lens, background, hood, support and adjusting bracket as shown, light unit on left hand side. Does not include lamp bulb, transformer nor resistance unit	36722–14
E	Type E Two-indication Color-light Signal Unit Complete, equipped with 8 3/8" doublet lenses, background, hoods, support and adjusting bracket, as shown. Does not include lamp bulbs, transformers nor resistance units	36722–15

(Continued on following page)

GENERAL RAILWAY SIGNAL COMPANY October 1925

Type E Color Light Signal Units

Drawing references are shown for convenience in checking shipping lists and invoices.

Fig. No.	Name	Drawing Reference
	Order by plate, figure number and name	
E1	as above, except without background	
F	Flexible Conduit Complete, 1¼″–2′, 3″ long as shown, for carrying wires from mounting bracket coupling to signal mast. Includes outlet coupling. (1-8, 1-9.)	
G	Flexible Conduit Complete, 1¼″, length as specified, or as required, for carrying wires from signal support to trunking on bridges. Includes coupling. (1-10, 1-11.)	
H	Flexible Conduit Complete, 1¼″, length as specified or as required, for carrying wires from signal mast to trunking on bridges. Includes couplings. (1-9, 1-10, 1-11.)	
1	Background Complete, with braces, bolts, nuts, etc., for three-indication Type E signal unit as shown in Fig. A	49163–9
2	Background Complete, with braces, bolts, nuts, etc., for signal unit as shown in Fig. B	49163–10
3	Background Complete, with braces, bolts, nuts, etc., for right-hand, one-indication Type E signal unit, as shown in Fig. C	49163–6
4	Background Complete, with braces, bolts, nuts, etc., for left-hand, one-indication Type E signal unit, as shown in Fig. D	49163–7
5	Background Complete, with braces, bolts, nuts, etc., for two-indication Type E signal unit, as shown in Fig. E	49163–8
6	Support Complete. See Plate H2211, Fig. B	
7	Adjusting Bracket Complete, with bolts for mounting a signal unit on a 5″ mast	
8	Flexible Conduit only, 1¼″–2′, 3″ long, for Fig. F	43355–14
9	Outlet Coupling Complete, for connecting flexible conduit to mast	43359
10	Flexible Conduit only, 1¼″, length as specified or as required	
11	Coupling Complete, for connecting flexible conduit to trunking	45688

Memoranda

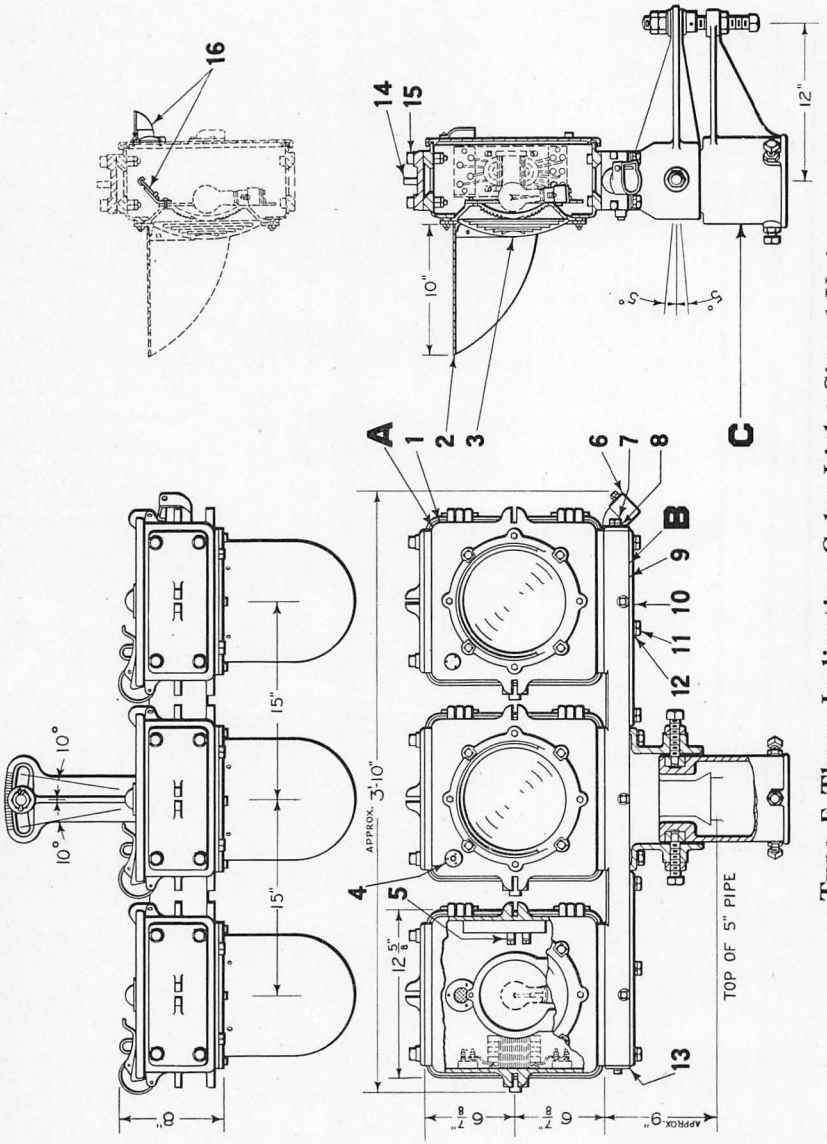

Type E Three-Indication Color Light Signal Unit

October 1925 GENERAL RAILWAY SIGNAL COMPANY

Type E Three Indication Color Light Signal Unit and Parts

Note: See foreword and order information, page 220, at the beginning of this part. This plate is included to show details of construction and for convenience in ordering repair parts.

For signal units complete, see Plate H2209.

Drawing references are shown for convenience in checking shipping lists and invoices.

Fig. No.	Name	Drawing Reference
	Order by plate, figure number and name	
A	Lamp Case Complete, as shown, for mounting to support, Fig. B: Includes case, doublet lens unit, hood and bolts. The doublet lens unit includes an 8⅜″ diameter outer clear lens, a 5½″ diameter inner colored lens, bezel rings and lamp receptacle. Specify color of lens. Lamp and transformer are not included. See Plates H3011 and P0102 (1-1, 1-2, 1-3, 2-5, 1-14, 4-15)	
B	Support Complete, for mounting three light units Fig. A, to adjusting bracket Fig. C. Includes covers, conduit inlet, screws, washers and bolts. (1-6, 7-7, 7-8, 1-9, 2-10, 12-11, 16-12, 1-13)	
B1	as above, except with end cover Fig. 13 in place of conduit inlet, Fig. 6	
C	Adjusting Bracket Complete, as shown	
1	Case, includes terminal block. Specify sighting glass if desired.	
2	Hood only	49127–1
3	Doublet Lens Unit. See Plate H3001, Fig. A	36762
4	Sighting Glass Complete	
5	Connector Complete, two post	18643–3
5a	as above, except four-post connector	18643–7
6	Conduit Inlet Complete, as shown	45688–9
7	Bolt, 1¼″–20x¾″, sq. hd., for fastening conduit inlet Fig. 6 to support Fig. 9	49121–1
8	Washer, 1¼″, lock, for bolt Fig. 7	0510
9	Support only for Fig. B	51362

(Continued on following page)

GENERAL RAILWAY SIGNAL COMPANY October 1925

Type E Three Indication Color Light Signal Unit and Parts

Drawing references are shown for convenience in checking shipping lists and invoices.

Fig. No.	Name	Drawing Reference
	Order by plate, figure number and name	
10	Bottom Cover, for support Fig 9	51484–2
11	Bolt, ½″–13x1½″, hex. hd., for fastening light units to support, bottom covers to support, and support to adjusting bracket	0551–1
12	Washer, ½″, lock, for bolt Fig. 11	091
13	End Cover, for support Fig. 9	51484–1
14	Plate, used on top of lamp case	36761
15	Bolt, ½″–13x2¼″, sq. hd., with hex. nut and pal nut, for fastening plate Fig. 14, to case Fig. 1	

Section H, Part 23

Type G
Color Light Signals

Copyright 1925, General Railway Signal Company

Type G Color Light Signal

Foreword and General Order Information

A general description of our color-light signals is given in Bulletin No. 144 and we urge our customers to read this bulletin carefully before ordering, since there are a number of features of construction and use given that will be an aid in securing equipment best adapted to your needs.

The most common Aspects and Indications for the Type G Signal are shown on pages 19, 20, 21 and 22 of Bulletin No. 144, but we will furnish equipment for giving any indications that you may desire to use.

Unless otherwise stated in the following lists, a signal unit is understood to mean the unit complete, including background, hoods and adjusting bracket, as shown on Plate H2309, but without lamps and transformers.

Lamps are not included with any of the signals nor signal units listed but must be ordered separately. Experience indicates that this method of ordering lamps is to the advantage of all concerned. Lamps are shown on Plate H3011.

Where the source of current supply is A-C., we recommend the use of individual transformers in each lamp case. Order references for individual lighting transformers are given in Plate P0102, Volume 4, and when specified these transformers will be mounted in signal units before shipment.

Signal foundations, number plates and marker lights are shown in the following plates for the purpose of illustrating the method of mounting only and are not included with the signal complete as listed. See Plates H2113 and H1905 for Marker Lights and Plate H1715 for Number Plates, and order separately.

Unless otherwise specified, signals will be furnished in recommended heights as shown.

Unless otherwise specified, signal units will be furnished with color and position of lenses as follows:

3 INDICATION UNIT	2 INDICATION UNIT
Upper Left Lens —Green	Upper Right Lens—Yellow
Upper Right Lens—Yellow	Lower Lens —Red
Lower Lens —Red	

Signals equipped with doublet lenses are regularly furnished with lenses that give a 20° downward spread and a 3° spread to either side of axial beam. Outer Spredlite lenses are available which may be used in place of the regular outer lens and which

(Continued on following page)

give a greater side spread than 3°. These lenses are used principally in signals located on curves and are furnished when specified to give either a 6° spread to either side of axial beam or a 15° spread to either side.

Doublet Lens Units are shown on Plate H3001.

Signal units are regularly furnished without back lights but back lights will be furnished when specified.

Relay cases shown with signals complete, are listed with shelving as specified for the reason that requirements are so varied as to make a standard arrangement impractical. Furnish a sketch of the shelving desired, or a list, and the arrangement of the apparatus to be located in the relay case. Other relay cases than those listed with the signal complete are shown and listed in Section E, Part 9.

PLATE H2301

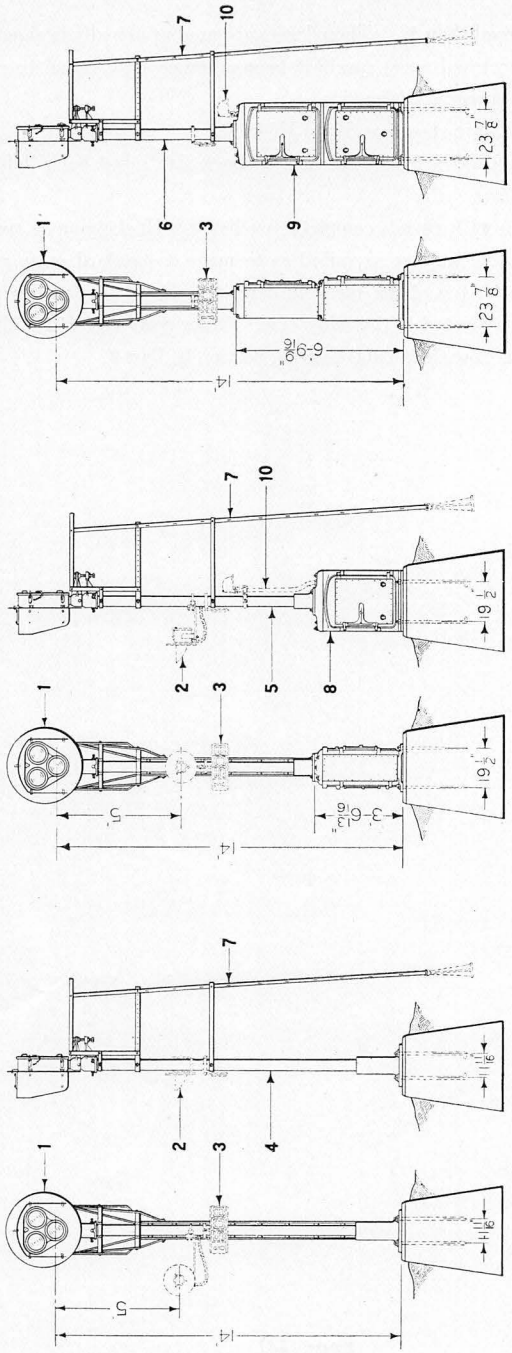

Type G Single-Unit Color Light Ground Signal

October 1925 GENERAL RAILWAY SIGNAL COMPANY

Type G Color Light Ground Signals

Single Unit

Note: See foreword and order information, page 230, at the beginning of this part.

Drawing references are shown for convenience in checking shipping lists and invoices.

Fig. No.	Name	Drawing Reference
	Order by plate, figure number and name	
A	Type G Color-light Ground Signal Complete, consisting of one three-indication signal unit equipped with 8⅜″ doublet lenses and mounted on mast as shown. Marker light, number plate and anchor bolts are not included	
B	Type G Color-light Ground Signal Complete, consisting of one three-indication signal unit equipped with 8⅜″ doublet lenses and mounted on mast supported on double door relay case as shown. Marker light, number plate, cable outlet and anchor bolts are not included. Specify shelving desired in relay case	
B1	as above, except mounted on single door relay case shown on Plate E0915, Fig. A	
C	Type G Color-light Ground Signal Complete, consisting of one three-indication signal unit equipped with 8⅜″ doublet lenses and mounted on mast supported on relay and instrument case as shown. Number plate, cable outlet and anchor bolts are not included. Specify shelving desired in relay and instrument case	
C1	as above, except mounted on large double door relay case as shown on Plate E0915, Fig. B	
1	Type G Three-indication Signal Unit Complete. For details see Plate H2309	36722-13
2	Marker Light. See Plates H2113 and H1905 for order reference	
3	Number Plate. See Plate H1715 for order reference	
4	Mast, 12′, 10″ long, of 5″ pipe with A. R. A. base for mounting on foundation as shown in Fig. A	
5	Mast, 9′, 3″ long, of 5″ pipe with base for mounting relay case as shown in Fig. B	

(Continued on following page)

GENERAL RAILWAY SIGNAL COMPANY October 1925

Type G Color Light Ground Signals

Single Unit

Drawing references are shown for convenience in checking shipping lists and invoices.

Fig. No.	Name	Drawing Reference
	Order by plate, figure number and name	
6	Mast, 7′, 4″ long, of 5″ pipe with base for mounting on double relay case as shown in Fig. C	
7	Ladder Complete, includes hand rails, platform, stays, clamps and bolts. Does not include foundation	
8	Relay Case Complete, 3′, 6 13/16″ high, by 2′, 5 1/2″ wide, by 16″ deep, with door on each side as shown, and with shelving as specified	
8a	as above, except with door on one side only	
9	Relay and Instrument Case, with shelving as specified. For details see Plate E0917, Fig. A	
10	Cable Outlet Complete with conduit, length as specified	

Memoranda

PLATE H2303

Type G Color Light Ground Signals

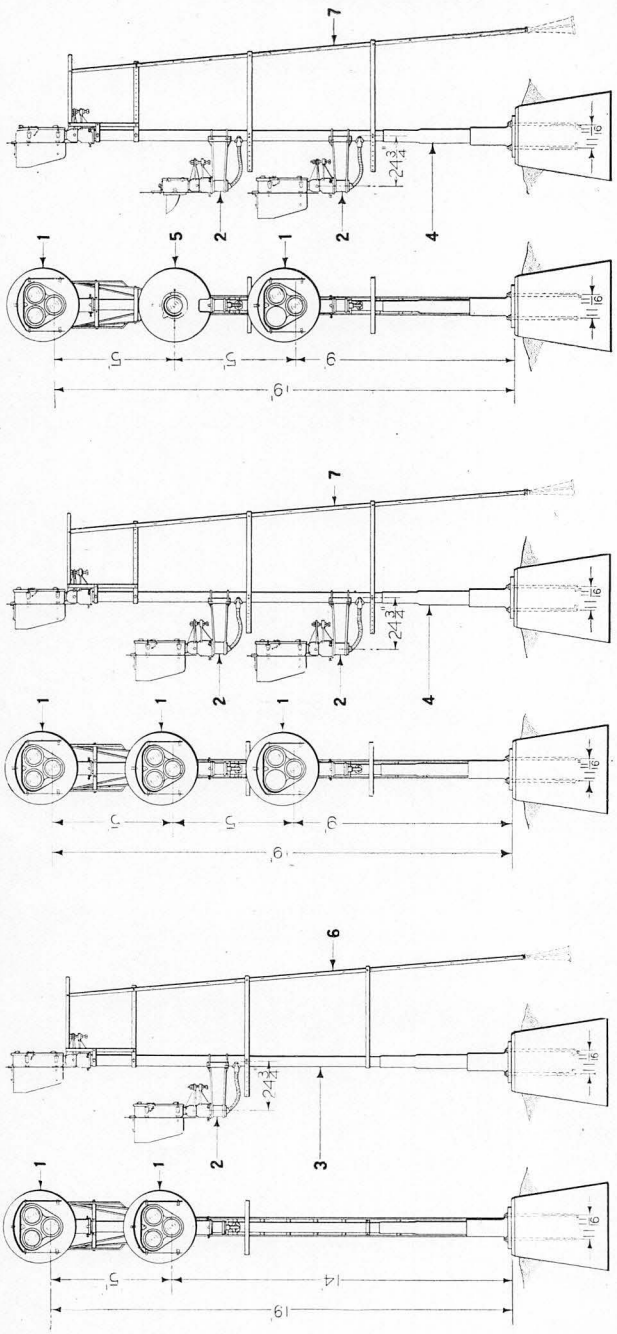

A - TWO UNIT SIGNAL

B - THREE UNIT SIGNAL

C - THREE UNIT SIGNAL-CENTER UNIT, FIXED INDICATION

October 1925 GENERAL RAILWAY SIGNAL COMPANY

Type G Color Light Ground Signals

Drawing references are shown for convenience in checking shipping lists and invoices.

Fig. No.	Name	Drawing Reference
	Order by plate, figure number and name	
A	Type G Color-light Ground Signal Complete, consisting of two three-indication signal units equipped with 8 3/8" doublet lenses and mounted on mast as shown	
A1	as above, except lower signal unit is a two-indication unit as shown on Plate H2113, Fig. C	
B	Type G Color-light Ground Signal Complete, consisting of two three-indication signal units and one two-indication signal unit, equipped with 8 3/8" doublet lenses, and mounted on mast as shown. Lower unit is a Type G three-indication signal unit with one lens opening covered	
B1	as above, except lower signal unit is the two-indication unit shown on Plate H2113, Fig. C	
C	Type G Color-light Ground Signal Complete, consisting of one three-indication signal unit, one fixed indication unit, and one two-indication signal unit, equipped with 8 3/8" doublet lenses, and mouned on mast as shown. Lower unit is a Type G three-indication signal unit with one lens opening covered	
C1	as above, except lower signal unit is the two-indication unit shown on Plate H2113, Fig. C	
1	Type G Three-indication Signal Unit Complete. For details see Plate H2309	
2	Bracket Complete, with U bolts for mounting to 5" mast	
3	Mast, 17', 10 1/2" long, of 5" and 6" pipe, with A. R. A. base, for mounting two signal units as shown in Fig. A	
4	Mast, 17', 10 1/2" long, of 5" and 6" pipe, with A. R. A. base, for mounting three signal units as shown in Figs. B and C.	
5	Type D One-indication Signal Unit with circular back-ground for use as a fixed indication	
6	Ladder Complete, includes hand rails, platforms, stays, clamps and bolts, as shown in Fig. A, but does not include foundation	
7	Ladder Complete, includes hand rails, platforms, clamps and bolts, as shown in Figs. C and D, but does not include foundation	

PLATE H2305

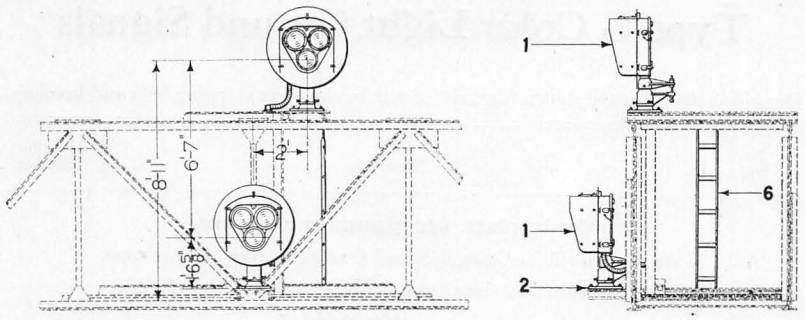

A

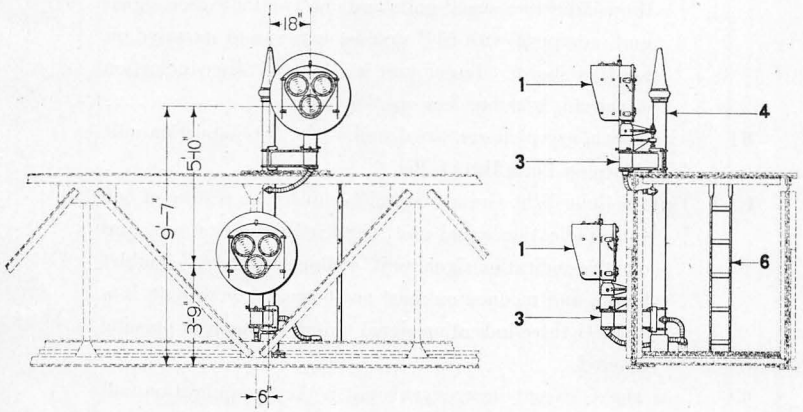

B

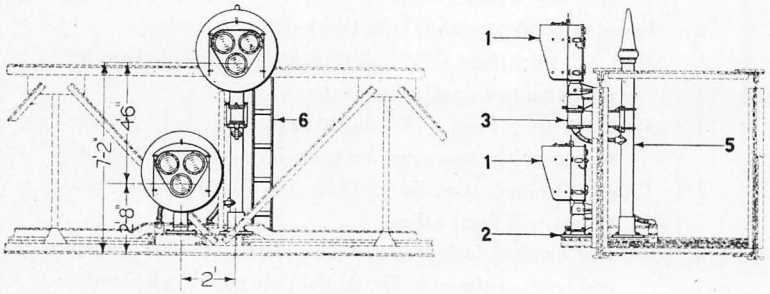

C

Type G Bridge Signals, Automatic

October 1925 GENERAL RAILWAY SIGNAL COMPANY

Type G Color Light Bridge Signals

Note: See foreword and order information, page 230, at the beginning of this part.

Bridge Signals Complete as listed, do not include any planking, trunking or bridge fixtures.

Drawing references are shown for convenience in checking shipping lists and invoices.

Fig. No.	Name	Drawing Reference
	Order by plate, figure number and name	
A	Type G Color-light Bridge Signal Complete, consisting of two three-indication signal units equipped with 8⅜″ doublet lenses, and with bases and ladder for mounting as shown	
A1	as above, except lower unit is a two-indication unit as shown on Plate H2113, Fig. C	
B	Type G Color-light Bridge Signal Complete, consisting of two three-indication signal units equipped with 8⅜″ doublet lenses and mounted to a short mast as shown. Includes mast, mounting brackets and ladder	
B1	as above, except lower unit is a two-indication unit as shown on Plate H2113, Fig. C	
C	Type G Color-light Bridge Signal Complete, consisting of two three-indication signal units equipped with 8⅜″ doublet lenses, with mast and base for mounting as shown	
C1	as above, except lower unit is a two-indication unit as shown on Plate H2113, Fig. C	
1	Type G Three-indication Signal Unit Complete. For details, see Plate H2309	36722–13
2	Base, for mounting signal unit on bridge as shown	21211–3
3	Bracket Complete, with U bolts for mounting to a 5″ mast. Includes flexible conduit connection	4668–1
4	Mast Complete, 9′, 6″ long, of 5″ pipe, includes flexible conduit connection as shown in Fig. B, and A. R. A. pinnacle	
5	Mast Complete, 6′, 9″ long, of 5″ pipe, includes flexible conduit connection as shown in Fig. C, and A. R. A. pinnacle	
6	Ladder, 6′, 10″ long, for bridge as shown in Figs. A, B, and C.	

PLATE H2307

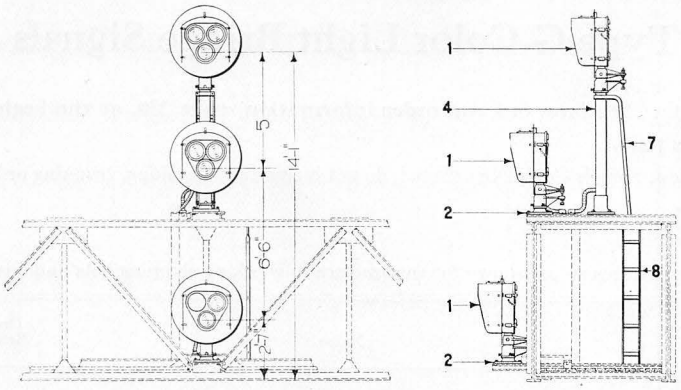

A

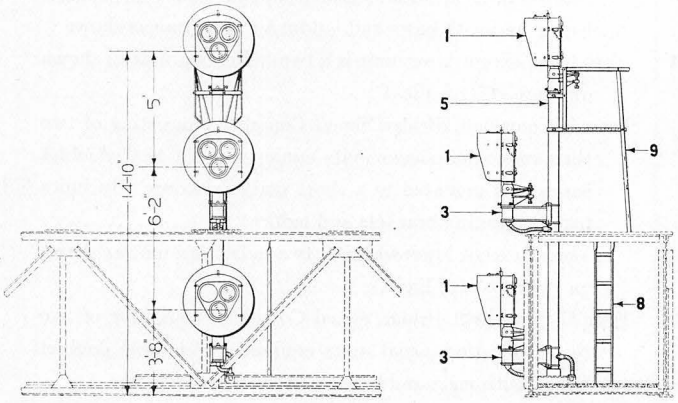

B

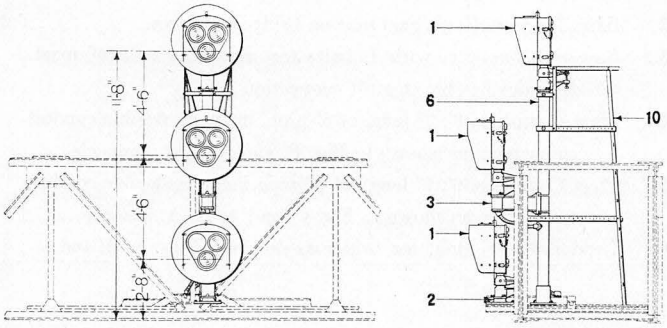

C

Type G Bridge Signals, Interlocking

October 1925 GENERAL RAILWAY SIGNAL COMPANY

Type G Color Light Bridge Signals

Note: See foreword and order information, page 230, at the beginning of this part.

Bridge Signals Complete as listed, do not include any planking, trunking, bridge fixtures or bolts for attaching signals to same.

Drawing references are shown for convenience in checking shipping lists and invoices.

Fig. No.	Name	Drawing Reference
	Order by plate, figure number and name	
A	Type G Color-light Bridge Signal Complete, consisting of two three-indication signal units and one two-indication signal unit, equipped with 8⅜″ doublet lenses. Includes mast, 5′, 8″ long, bases and ladders for mounting as shown. Lower unit is a Type G three-indication unit with one lens opening covered	
A1	as above, except lower signal unit is a two-indication unit as shown on Plate H2113, Fig. C	
A2	same as Fig. A, except center signal unit has one lens covered	
A3	same as Fig. A, except center and lower signal units are two-indication units as shown on Plate H2113, Fig. C	
B	Type G Color-light Bridge Signal Complete, consisting of two three-indication signal units and one two-indication signal unit, equipped with 8⅜″ doublet lenses. Includes mast, 12′, 5″ long, mounting brackets and ladders for mounting as shown. Lower unit is a Type G three-indication unit with one lens opening covered	
B1	as above, except lower signal unit is a two-indicaton unit as shown on Plate H2113, Fig. C	
B2	same as Fig. B, except center signal unit has one lens opening covered	
B3	same as Fig. B, except center and lower signal units are two-indication units, as shown on Plate H2113, Fig. C	
C	Type G Color-light Bridge Signal Complete, consisting of two three-indication signal units and one two-indication signal unit, equipped with 8⅜″ doublet lenses. Includes mast, 10′, 2″ long, mounting bracket and ladder for mounting as shown. Lower unit is a Type G three-indication unit, with one lens opening covered	

(Continued on following page)

GENERAL RAILWAY SIGNAL COMPANY October 1925

Type G Color Light Bridge Signals

Drawing references are shown for convenience in checking shipping lists and invoices.

Fig. No.	Name	Drawing Reference
	Order by plate, figure number and name	
C1	as above, except lower signal unit is the two-indication unit shown on Plate H2113, Fig. C	
C2	same as Fig. C, except center signal unit has one lens opening covered	
C3	same as Fig. C, except center and lower signal units are two-indication units as shown on Plate H2113, Fig. C	
1	Type G Three-indication Signal Unit Complete. For details see Plate H2309	36722–13
2	Base, for mounting signal unit on bridge as shown	21211–13
3	Bracket Complete, with U bolts for mounting to a 5″ mast, includes flexible conduit connection	4668–1
4	Mast Complete, 5′, 8″ long, of 5″ pipe, includes flexible conduit connection as shown in Fig. A	
5	Mast Complete, 12′, 5″ long, of 5″ pipe, includes flexible conduit connection as shown in Fig. B	
6	Mast Complete, 10′, 2″ long, of 5″ pipe, includes flexible conduit connection from mast to trunking as shown in Fig. C.	
7	Ladder, for upper signal unit, Fig. A	
8	Ladder, 6′, 10″ for bridge, Figs. A and B	
9	Ladder and Platform, for upper signal unit, Fig. B	
10	Ladder and Platform, as shown in Fig. C	

Memoranda

PLATE H2308

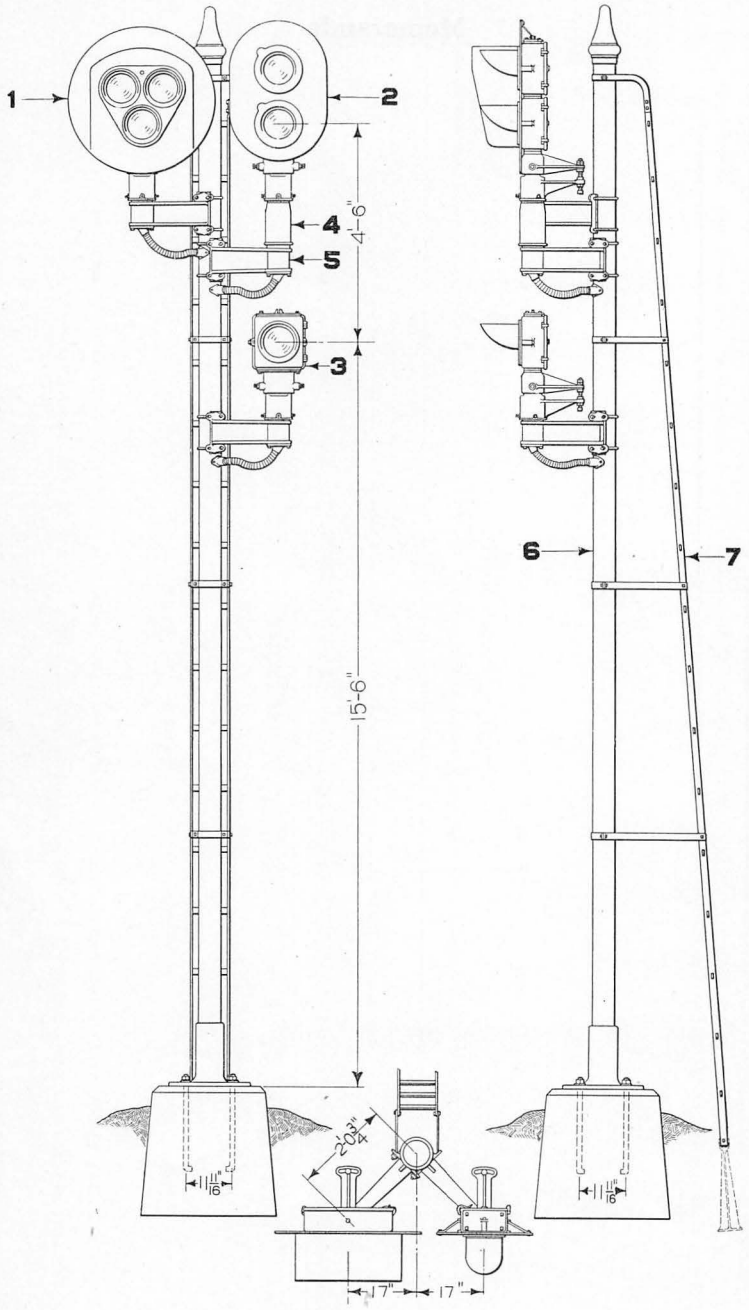

A

Combination Automatic and Train Order Signal

October 1925 GENERAL RAILWAY SIGNAL COMPANY

Color Light Signal

Combination Automatic and Train Order

Note: See foreword and order information, page 230, at the beginning of this part, also pages 42 and 43 of Bulletin No. 144.

If ladders with platforms and handrails are desired for this signal, same can be furnished, but this necessitates a special design and arrangement.

Combination Signals Complete of other types will be furnished when we are given full and complete information as to what is desired.

If a signal of a height other than shown is desired, same must be specified.

Drawing references are shown for convenience in checking shipping lists and invoices.

Fig. No.	Name	Drawing Reference
	Order by plate, figure number and name	
A	Combination Automatic and Train Order Color-light Signal Complete, consisting of one three-indication Type G signal unit, one two and one single indication Type D signal units, equipped with 8⅜″ doublet lenses and bracket mounted to mast as shown. Anchor bolts and ladder foundations are not included	
A1	as above, except with a three-indication Type D signal unit used in place of the three-indication Type G signal unit	
1	Type G Three-indication Signal Unit Complete. For details see Plate H2309	
2	Type D Two-indication Signal Unit Complete. For details see Plates H2113 and H2115	
3	Type D Single-indication Signal Unit Complete without background. For details see Plates H2113 and H2115	
4	Adapter Complete, as shown	51861
5	Bracket Complete, for mounting to a 5″ mast, includes flexible conduit connection, and necessary bolts	
5a	as above, except without flexible conduit connection, but with fittings for Parkway cable	
6	Mast, of 5″ pipe, height 21′, 8″ from top of foundation to top of pipe, drilled for mounting as shown. Includes pinnacle and A. R. A. base	
7	Ladder Complete, length as shown. Includes stays, clamps and bolts. Does not include foundation	310–38

(Continued on following page)

PLATE H2309

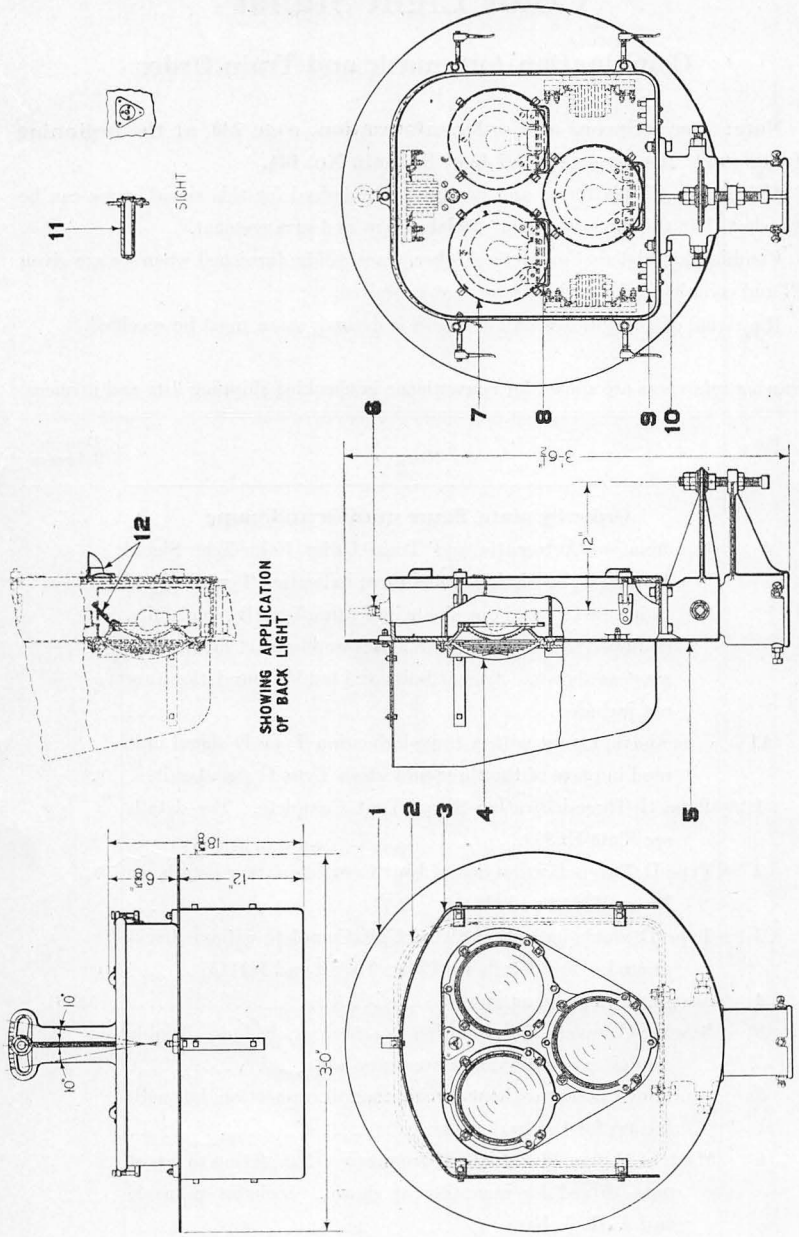

Type G Color Light Signal Unit

October 1925 GENERAL RAILWAY SIGNAL COMPANY

Type G Color Light Signal Unit

Note: See foreword and order information, page 230, at the beginning of this part.

Unless otherwise specified, signal units will be furnished without backlights Fig. 12.

Drawing references are shown for convenience in checking shipping lists and invoices.

Fig. No.	Name	Drawing Reference
	Order by plate, figure number and name	
A	Type G Three-indication Color-light Signal Unit Complete, equipped with 8⅜″ doublet lenses and with background, hood and adjusting bracket as shown. Does not include lamp bulbs, transformers nor resistance units	36722–13
1	Background complete with braces, bolts, nuts, etc	49162–16
2	Case only, includes door, hinges and hasps	
3	Hood Complete, with brackets, bolts, nuts, etc	49162–16
4	Doublet Lens Unit. See Plate H3001, Fig A	36762–4
5	Adjusting Bracket Complete, as shown	46668–3
6	Eye Bolt (Not furnished with Signal Unit Complete)	2102
7	Upper Shield Complete, with mounting clips	50737–1
8	Lower Shield Complete	50737–2
9	Terminal Block Complete, with mounting screws as shown	
10	Bolt and Nut, ½″—13x1¾″, for attaching case to adjusting bracket	0390
11	Sight Complete, includes sighting glass and mounting screws	
12	Back Light Complete, includes mirror, 2″ lens, bezel ring, small hood and screws for mounting	

Memoranda

Section H, Part 24

Type F
Color Light Signals

Copyright 1925, General Railway Signal Company

Type F Color Light Signals

Foreword and General Order Information

A general description of our several types of color-light signals is given in Bulletin No. 144 and we urge our customers to read this bulletin carefully before ordering, since there are a number of features of construction given that will be an aid in securing equipment best adapted to your needs.

This signal can be arranged for giving the indications as shown on pages 19, 20, 21 and 22 of Bulletin No. 144 and also for giving indications as shown on page 39 of the same Bulletin, the latter being more commonly used for subway signaling. The Type F Signal is well adapted for giving practically any combination of indications that may be desired.

The Type F Signal is equipped with the 5″ doublet lens units which are shown on Plate H3001.

The relay cases shown with the Type F Signal are best adapted to the housing of alternating-current relays, transformers, etc. Other relay cases shown and listed in Section E, Part 9 will be furnished when specified.

Unless otherwise stated in the following lists, a signal unit is understood to mean the unit complete as shown on Plate H2405 or Plate H2407.

Lamp bulbs are not included with any of the signals nor signal units as listed but must be ordered separately. Lamp bulbs are shown on Plate H3011.

Where the source of current supply is A-C, we recommend the use of individual transformers in each lamp case. Order references for individual transformers to fit the Type F lamp case are given on Plate P0102, Fig. B and when specified these transformers will be mounted in signal units before shipment.

Unless otherwise stated in the lists, the doublet lens regularly employed in signals listed on this plate gives a 3° spread around axial beam. When specified a Spredlite outer lens which gives a greater spread than 3° will be furnished in place of the regular outer lens, this for use on curves. One Spredlite lens is available which gives a 6° spread either side of axial beam, or another can be supplied which gives a 15° spread to either side.

Unless otherwise specified or listed, signal units will be furnished with color and position of lenses as follows:

3 INDICATION UNIT		2 INDICATION UNIT		1 INDICATION UNIT	
Upper Lens	Green	Upper Lens	Yellow	Lens	Red
Center Lens	Yellow	Lower Lens	Red		
Lower Lens	Red				

Memoranda

PLATE H2401

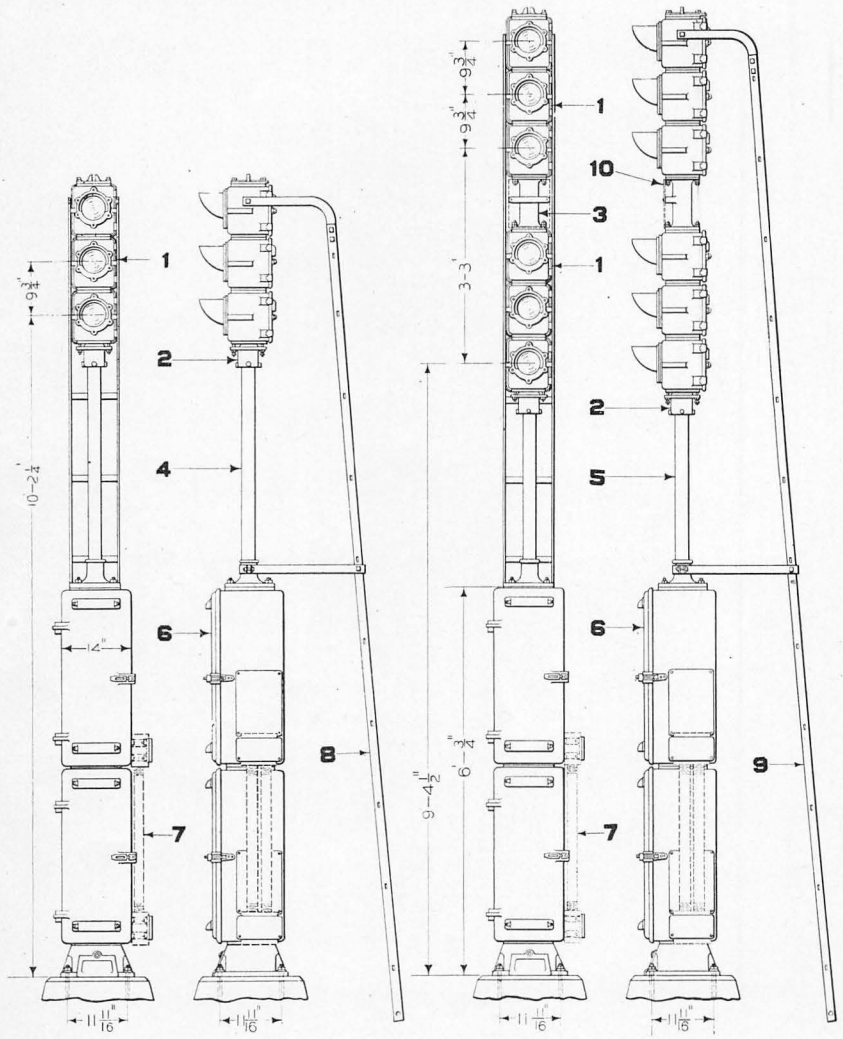

A-SINGLE UNIT SIGNAL

B-TWO UNIT SIGNAL

Type F Color Light Ground Signal

October 1925 GENERAL RAILWAY SIGNAL COMPANY

Type F Color Light Ground Signals

Note: See foreword and order information, page 240, at the beginning of this part.

While signals shown on this plate are listed with double relay cases only, they can be furnished with single relay cases when specified. For detail of relay cases, shelving and terminal board arrangement, see Plate E0911.

Concrete foundation and anchor bolts are not included with signal complete.

Conduit, Fig. 8, shown dotted, is furnished only when specified. When ordering relay boxes equipped with this conduit, specify on which side of box the conduit is to be located.

Drawing references are shown for convenience in checking shipping lists and invoices.

Fig. No.	Name	Drawing Reference
	Order by plate, figure number and name	
A	Type F Color-light Ground Signal Complete, consisting of one three-indication signal unit equipped with 5″ doublet lenses and mounted on double relay case as shown	
B	Type F Color-light Ground Signal Complete, consisting of two three-indication signal units equipped with 5″ doublet lenses and mounted on double relay case as shown	
B1	as above, except lower signal unit is a two-indication unit	
1	Type F Three-indication Signal Unit Complete, for details see Plate H2407, Fig. A1	
2	Mounting Socket Complete, with bolts for mounting signal unit to 2½″ pipe	
3	Spacer Complete, with bolts, for mounting two signal units together as shown	
4	Mast, 3′—5⅝″ long of 2½″ pipe, with base for mounting on relay case as shown	
5	Mast, 2′—10″ long of 2½″ pipe, with base for mounting on relay case as shown	
6	Double Relay Box Complete, 6′—¾″ high by 14″ wide by 12¾″ deep. See Plate E0911 for details	
7	Double 2″ Conduit Complete, with outlet boxes as shown dotted. Furnished only when specified	
7a	as above, except single 2″ conduit complete with outlet boxes	

(Continued on following page)

GENERAL RAILWAY SIGNAL COMPANY October 1925

Type F Color Light Ground Signals

Drawing references are shown for convenience in checking shipping lists and invoices

Fig. No.	Name	Drawing Reference
	Order by plate, figure number and name	
8	Ladder Complete, with stays, clamps and bolts for single unit three-indication signal	
9	Ladder Complete, with stays, clamps and bolts for two unit, three-indication signal	
10	Number Plate, with screws for mounting, numbered as specified. (Not furnished with signal complete unless specified)	

Memoranda

PLATE H2403

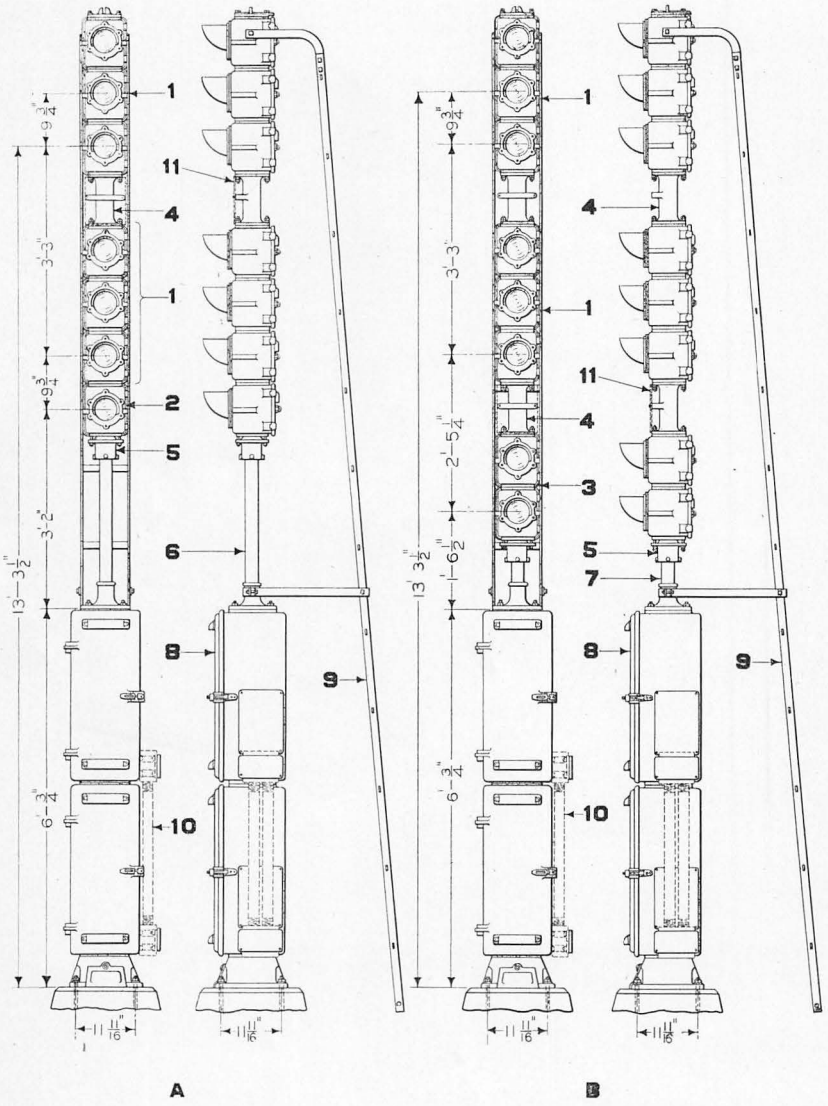

Type F Three Unit Color Light Signals

October 1925 GENERAL RAILWAY SIGNAL COMPANY

Type F Color Light Ground Signals

Note: See foreword and order information, page 240, at the beginning of this part.

For detail of relay cases, shelving and terminal board arrangement, see Plate E0911.

Concrete foundation and anchor bolts are not included with signal complete.

Conduit, Fig. 10 shown dotted, is furnished only when specified.

Drawing references are shown for convenience in checking shipping lists and invoices.

Fig. No.	Name	Drawing Reference
	Order by plate, figure number and name	
A	Type F Color-light Ground Signal Complete, consisting of two three-indication signal units and one single-indication signal unit equipped with 5″ doublet lenses and mounted on double relay case as shown. Lower signal unit has yellow lens which is used for a "Calling on Signal"	
A1	as above, except center signal unit is a two-indication unit	
B	Type F Color-light Ground Signal Complete, consisting of two three-indication signal units and one two-indication signal unit equipped with 5″ doublet lenses and mounted on double relay case as shown	
B1	as above, except center signal unit is a two-indication unit	
1	Type F Three-indication Signal Unit Complete, for detail see Plate H2407, Fig. A1	
2	Type F One-indication Signal Unit Complete. This lighting unit is a duplicate of the lighting units used in the three-indication signal unit; it has a yellow doublet lens for use as a "Calling on" or slow speed indication	
3	Type F Two-indication Signal Unit Complete, for details see Plate H2405, Fig. A1	
4	Spacer Complete, with bolts for mounting two signal units together as shown	
5	Mounting Socket Complete, with bolts, for mounting signal unit to 2½″ pipe	
6	Mast, 1′—10″ long of 2½″ pipe with base for mounting on relay case as shown	

(Continued on following page)

GENERAL RAILWAY SIGNAL COMPANY October 1925

Type F Color Light Ground Signals

Drawing references are shown for convenience in checking shipping lists and invoices.

Fig. No.	Name	Drawing Reference
	Order by plate, figure number and name	
7	Mast, 1′—0″ long of 2½″ pipe, with base for mounting on relay case as shown	
8	Double Relay Box Complete, 6′—¾″ high, by 14″ wide by 12¾″ deep. See Plate E0911 for details	
9	Ladder Complete, with stays, clamps and bolts for signals shown in Figs. A and B	
10	Double 2″ Conduit Complete, with outlet boxes, as shown dotted. Furnished only when specified. When ordering relay boxes equipped with this conduit, specify on which side of box the conduit is to be located	
10a	as above, except Single 2″ Conduit Complete, with outlet boxes	
11	Number Plate, with screws for mounting, numbered as specified. (Not furnished with signal complete unless specified)	

Memoranda

PLATE H2405

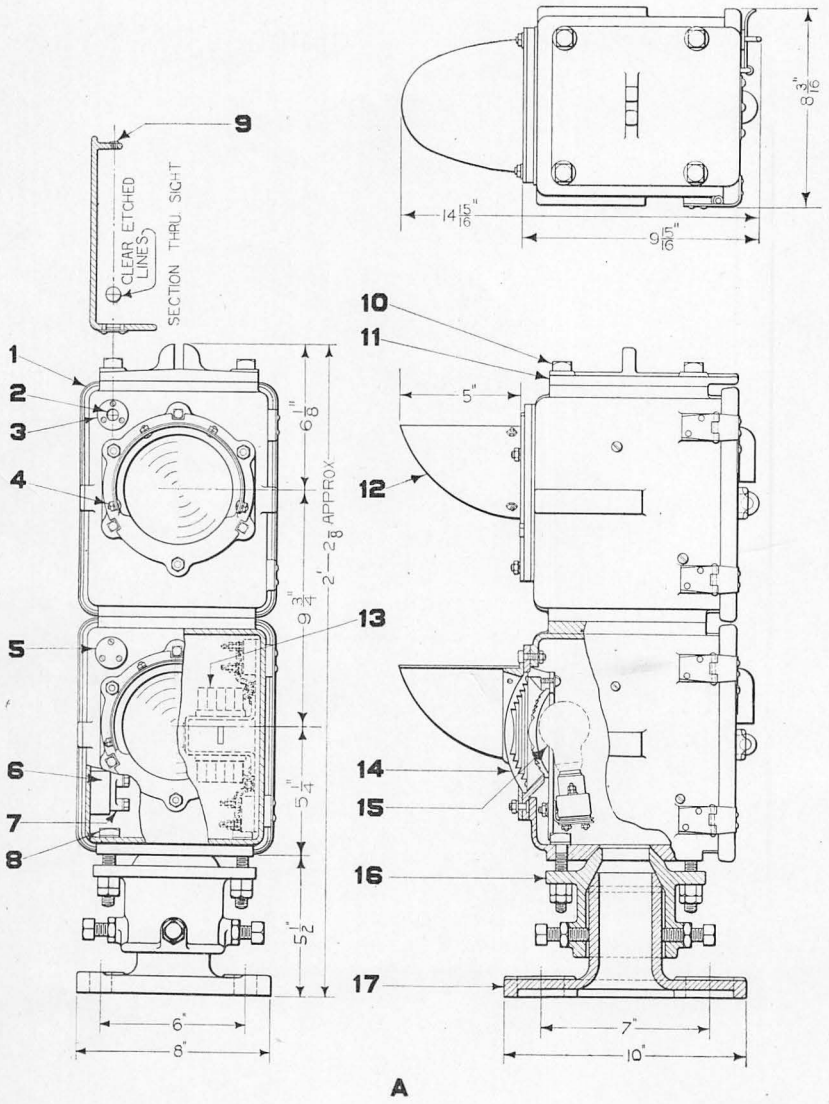

Two Indication Type F Color Light Dwarf Signal

October 1925 GENERAL RAILWAY SIGNAL COMPANY

Type F Color Light Dwarf Signals

Note: See foreword and order information, page 240, at the beginning of this part.

Unless otherwise specified, Dwarf Signals are furnished with lenses that give a 20° upward spread.

Where the source of current supply is alternating current, we recommend the use of a small transformer as shown on Plate P0102, Fig. B in each lamp case. These transformers will be assembled in the lamp cases before shipment when specified.

Drawing references are shown for convenience in checking shipping lists and invoices.

Fig. No.	Name	Drawing Reference
	Order by plate, figure number and name	
A	Type F Two-indication, Color-light Dwarf Signal Complete, equipped with 5″ doublet lenses and arranged for adjustable mounting. Does not include lamp bulbs nor transformers	
A1	as above, except unit only with mounting socket Fig. 16 and without base Fig. 17, for mounting on 2½″ pipe	
1	Case Complete	27470–3
2	Glass, clear, with etched lines for front sight	924–4
3	Bezel Ring, with screws for glass Fig. 2	43718–1
4	Screw, No. 10—32x⅝″ rd. hd. with nut and lock washer for fastening hood to case	
5	Disc, used as cover where sighting glass is not required	39719–4
6	Terminal Block Complete, with screws for mounting	
7	Connector Complete, with screw for mounting to terminal block	
8	Bolt, ½″—13x3½″ sq. hd. with two hex. nuts for mounting case to base	
9	Plug, sighting, as shown	51364
10	Bolt, ½″—13x2″ sq. hd. with two hex. nuts	
11	Plate, used as cover for top case	36761–1
12	Hood, as shown	49127–9
13	Transformer, Type K½. See Plate P0102, Fig. B for order reference	
14	Doublet Lens Unit Complete. For detail, see Plate H3001, Fig. B	36762–2

(Continued on following page)

GENERAL RAILWAY SIGNAL COMPANY October 1925

Type F Color Light Dwarf Signals

Drawing references are shown for convenience in checking shipping lists and invoices.

Fig. No.	Name	Drawing Reference
	Order by plate, figure number and name	
15	Lamp Bulb, see Plate H3011 for order reference.....	
16	Mounting Socket Complete, as shown, for mounting Type F Color-light Signal Unit to 2½″ pipe or to base Fig. 17.....	
17	Base, for use with mounting socket, Fig. 16, to provide an adjustable mounting for dwarf signals.....	21211–4

Memoranda

PLATE H2407

GENERAL RAILWAY SIGNAL COMPANY October 1925

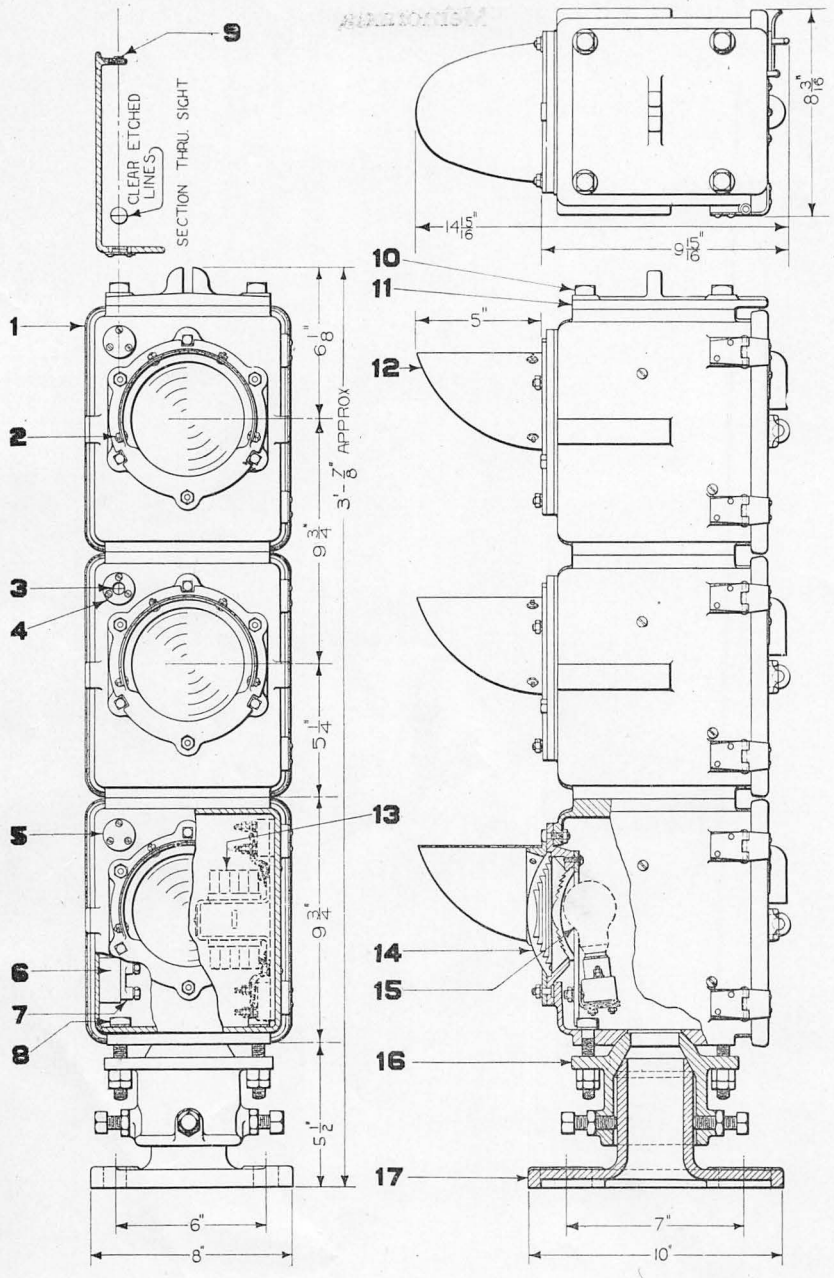

A

Three Indication Type F Color Light Dwarf Signal

October 1925 GENERAL RAILWAY SIGNAL COMPANY

Type F Color Light Dwarf Signals

Note: See foreword and order information, page 240, at the beginning of this part.

Unless otherwise specified, dwarf signals are furnished with lenses that give a 20° upward beam spread.

Where the source of current supply is A-C., we recommend the use of an individual transformer in each lamp case. These transformers are shown on Plate P0102, Fig. B and will be assembled in lamp cases before shipment when specified.

Drawing references are shown for convenience in checking shipping lists and invoices.

Fig. No.	Name	Drawing Reference
	Order by plate, figure number and name	
A	Type F Three-indication Color-light Dwarf Signal Complete, equipped with 5″ doublet lenses and arranged for adjustable mounting. Does not include lamp bulbs nor transformers.	
A1	as above, except unit only with mounting socket Fig. 16 and without base Fig. 17, for mounting on 2½″ pipe	
1	Case Complete	27470–3
2	Screw, No. 10—32x⅝″ rd. hd. with nut and lock washer for fastening hood to case	
3	Glass, clear with etched lines, for front sight	924–4
4	Bezel Ring, with screws for sighting glass Fig. 3	43718–1
5	Disc, used as cover where sighting glass is not required	39719–4
6	Terminal Block Complete, with screws for mounting	
7	Connector Complete, with screw for mounting to terminal block	
8	Bolt, 1″—32x2¼″ sq. hd. with two hex. nuts for mounting case to base	
9	Plug, sighting, as shown	51364
10	Bolt, ½″—13x2″ sq. hd. with two hex. nuts	
11	Plate, used as cover for top case	36761–1
12	Hood, as shown	49127–9
13	Transformer, Type K½. See Plate P0102, Fig. B for order reference	
14	Lens Unit Complete. For detail, see Plate H3001, Fig. B	36762–2
15	Lamp Bulb, see Plate H3011 for order reference	

(Continued on following page)

GENERAL RAILWAY SIGNAL COMPANY October 1925

Type F Color Light Dwarf Signals

Drawing references are shown for convenience in checking shipping lists and invoices

Fig. No.	Name	Drawing Reference
	Order by plate, figure number and name	
16	Mounting Socket Complete, as shown, for mounting Type F Color-light signal unit to 2½″ pipe or to base Fig. 17.....	
17	Base, for use with mounting socket, Fig. 16, to provide an adjustable mounting for dwarf signals.....	21211–4

Section H, Part 26

Type SA
Color-Light Signals

Supersedes Section H, Part 26, dated March 1930

Copyright, 1941, General Railway Signal Company
Printed in U. S. A.

Type SA Color-Light Signals

Foreword and General Ordering Information

Due to its compact design, high efficiency and inherent safety features, the Type SA Color-Light Signal is well suited to the requirements of modern signaling. The signal has been developed to a very high state of perfection and is giving a thoroughly dependable service in many climates.

The optical construction of the Type SA Signal is illustrated by the diagram Figure 1, and is described briefly as follows:

A concentrated filament lamp is placed with its filament at the focal point of an ellipsoidal reflector which collects a large percentage of the light rays emitted from the lamp, projects and concentrates them at the second focal point of the reflector. At this second point, which is coincident with the

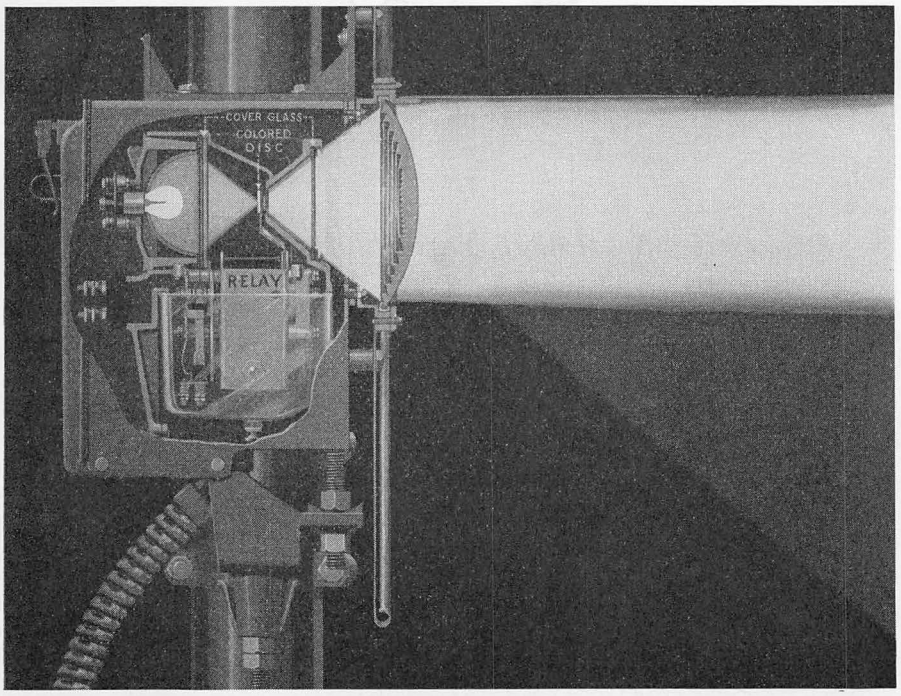

Figure 1

focal point of a clear optical lens, the light rays pass through a miniature colored roundel, fill the lens and emerge in a substantial colored beam.

Three of these miniature colored roundels are supported by the moving member of a three position relay, the position of the relay determining the color of the roundel through which the light passes—hence the color of the signal indications.

The advantages of this construction are:

1. Compactness permitting signal to be located where clearances are very limited and where other types of signals cannot be used.

2. Three indications are projected from one lens, thereby eliminating ⅔ of the lenses and lamps usually employed in color-light signaling. Not only is the installation and maintenance simplified but signal units may be located to better advantage with respect to the view of the engineer in the cab.

3. Efficiency is more than double that of the usual doublet lens type of signal, which means that a superior indication is obtained with less wattage.

4. The relay mechanism is biased by gravity to produce a danger indication when the control current is cut off.

5. No false phantom indication can occur since all light entering the signal, before being reflected, must pass through the colored roundel which is determining the indication of the signal, therefore producing the true indication of the signal. Thus the phantom characteristic of the color-light signal is converted from a defect into an advantage. The stronger the sunlight into the signal the stronger the indication. The indication produced by a locomotive headlight shining into the signal is readable even with the signal lamp burned out, thus a certain amount of "burned out" lamp protection.

6. The same lamp is employed to project three indications through one lens hence there is constant check on the ability of the signal to give its most restrictive indication, a safety feature of importance.

7. The signal may be controlled directly over the line, thus reducing the number of relays required and simplifying the circuits.

Type SA Signals are supplied for operation on direct or alternating current as follows:

4, 7.5 - 8, 10 or 12 volts d-c.
110 volts—50 or 60 cycles a-c.
55 volts—25 cycles a-c.
15 to 16.5 volts—25 or 60 cycles a-c.

These signals are equipped with either compound lenses, as shown on Plate H2635, or with stepped lenses, as shown on Plate H2631. The compound lens signal may be used with any wattage lamp suitable for the SA signal; and in view of its efficiency, may be employed on primary battery installations using low wattage lamps, such as 4 volt-3 watt, 8 volt-5 watt, or 10 volt-5 watt. The stepped lens signal should ordinarily not be used with a lamp of less than 10 watt rating.

The standard d-c. relay mechanism employs a permanent magnet so that no local energy is required. This makes it suitable for primary battery installations as well as the more usual installations employing storage battery. Older type mechanisms were furnished with local windings as shown on Plate H2641, and if desired these local coils may be replaced with permanent magnets.

Both compound lens and stepped lens signals may be equipped with additional roundels for use on curved track. The $8\frac{3}{8}''$ diameter roundels, which may be used with either type of lens, are available for 15° and 30° spredlite and 20° and 40° deflecting. The spredlite roundels spread the beam equally either side of the axis, whereas the deflecting roundels are arranged to spread all of the beam to one side of the axis. Usually on curves of one direction, the 20° deflecting roundel is suitable for most locations, and for "S" curves, the 30° spredlite roundel will usually cover the approach to the signal.

All Type SA Signal mechanisms are equipped with knife-edge bearings which require no lubrication and resist the most severe vibration, showing no appreciable wear after years of service.

Suggestions for the installation and maintenance of Type SA Color-Light Signals together with information relative to incandescent lamps and Lens combinations available for this signal are contained in our Bulletin 163 and Booklet No. 8. Copies of these will be supplied upon request.

Memoranda

PLATE H2601

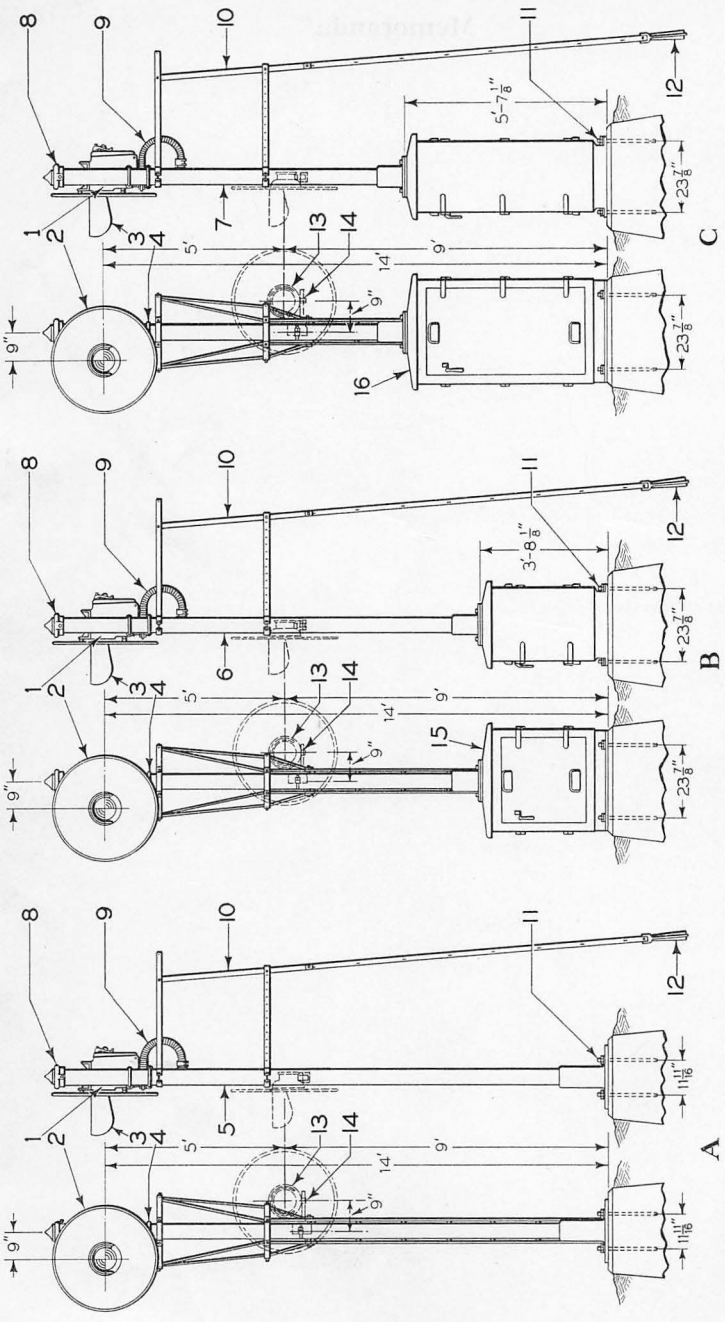

Type SA Color-Light Ground Signals
Single Unit

January 1941 GENERAL RAILWAY SIGNAL COMPANY

Type SA Color-Light Ground Signals
Single Unit

Note: See foreword and ordering information at the beginning of this part.

See Plate H2631 for signal unit with stepped lens and H2635 for signal unit with compound lens.

When masts of greater height than those shown are required or if different spacing between lights is required, please specify on order.

Drawing references are shown for convenience in checking shipping lists and invoices.

Fig. No.	Name	Drawing Reference
	Order by plate, figure number and name	
A	Type SA Color-Light Ground Signal Complete, consisting of one, three-indication signal unit with stepped or compound lenses **as specified** and mounted on mast as shown. Marker lights, markers, number plates and anchor bolts are not included and must be ordered separately.....	
B	Type SA Color-Light Ground Signal Complete, consisting of one, three-indication signal unit with stepped or compound lenses **as specified** and mounted on mast supported on low double door relay case as shown on Plate E0935. Marker lights, markers, number plates and anchor bolts are not included and must be ordered separately. See Plates E0939 and E0941 and specify shelving required in case.....	
B1	as above, except mounted on low single door relay case as shown on Plate E0937.....	
C	Type SA Color-Light Ground Signal Complete, consisting of one, three-indication signal unit with stepped or compound lenses **as specified** and mounted on high double door relay case as shown on Plate E0932. Marker lights, markers, number plates and anchor bolts are not included, and must be ordered separately. See Plates E0940 and E0941 and specify shelving required in case.....	
C1	as above, except mounted on high single door relay case as shown on Plate E0934.....	
1	Type SA Three-indication Signal Unit Complete, with stepped lens. For details and order references see Plate H2631.....	53051-6

(Continued on following page)

GENERAL RAILWAY SIGNAL COMPANY January 1941

Type SA Color-Light Ground Signals

Single Unit

Drawing references are shown for convenience in checking shipping lists and invoices.

Fig. No.	Name	Drawing Reference
	Order by plate, figure number and name	
1a	as above, except with compound lens. For details and order references see Plate H2635	53051–7
2	Background, as shown, for use with 8⅜″ lens	49162–25
2a	as above, except for use with 10½″ lens	49162–24
3	Hood, as shown, for use with 8⅜″ lens	49127–19
3a	as above, except for use with 10½″ lens	49127–20
4	U Bolt Complete, for fastening signal unit to 5″ pipe	16209–4 Gr. 1
4a	as above, except for fastening signal unit to 4″ pipe	16209–5 Gr. 1
4b	same as Fig. 4, except for fastening signal unit to 6″ pipe	16209–6 Gr. 1
5	Mast, 15′–3″ long of 5″ pipe, with base for mounting on foundation as shown in Fig. A	48848–9 Gr. 43
6	Mast, 11′–7″ long of 5″ pipe, with base for mounting on low relay case as shown in Fig. B	48848–9 Gr. 44
7	Mast, 9′–8″ long of 5″ pipe, with base for mounting on high relay case as shown in Fig. C	48848–9 Gr. 56
8	Pinnacle Complete, as shown, for 5″ mast	56894 Gr. 2
9	Conduit, 1½″ x 2′–7″ lg. includes couplings	48525–2 45688–15 Gr. 1
10	Ladder Complete, includes handrails, platform, stays, clamps and bolts. Does not include foundation	310–26 Gr. 5
11	Anchor Bolt, 1″–8 x 2′–0″ lg., includes hex. nut and washer	10270–1 Gr. 1 074
12	Foundation, as shown, for ladder	36773
13	Type W Light Unit Complete, for use as marker light. For details and order references see Section H, Part 32	53127
13a	as above, except Type SA Light Unit. For details and order references see Plate H2639	
14	Clamp Complete, as shown, includes U bolt for supporting Type W Light Unit, for 5″ mast	53126 Gr. 1 16209–4 Gr. 1

(Continued on following page)

January 1941 GENERAL RAILWAY SIGNAL COMPANY

Type SA Color-Light Ground Signals

Single Unit

Drawing references are shown for convenience in checking shipping lists and invoices.

Fig. No.	Name	Drawing Reference
	Order by plate, figure number and name	
15	Relay Case Complete, welded steel, 3′–8⅛″ high, 3′–2″ wide and 2′–6⅞″ deep, with door on each side. For details and order references see Plate E0935	36006–15
15a	as above, except with door on one side only. For details and order references see Plate E0937	36006–16
16	Relay Case Complete, welded steel, 5′–7⅛″ high, 3′–2″ wide and 2′–6⅞″ deep, with door on each side of case. For details and order references see Plate E0932	36006–14
16a	as above, except with door on one side only. For details and order references see Plate E0934	36006–20

PLATE H2603

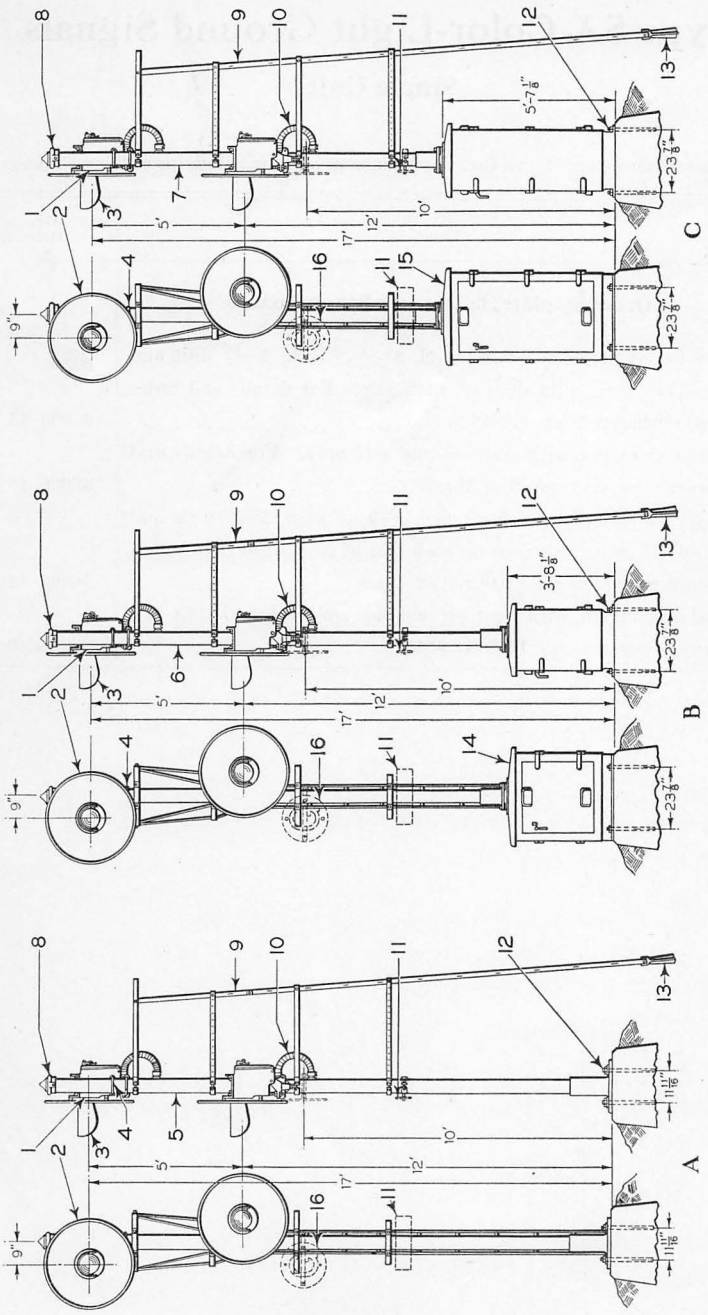

Type SA Color-Light Ground Signals
Two Unit

January 1941 GENERAL RAILWAY SIGNAL COMPANY

Type SA Color-Light Ground Signals

Two Unit

Note: See foreword and ordering information at the beginning of this part.

See Plate H2631 for signal unit with stepped lens and H2635 for signal unit with compound lens.

When masts of greater height than those shown are required or if different spacing between lights is required, please specify on order.

Drawing references are shown for convenience in checking shipping lists and invoices.

Fig. No.	Name	Drawing Reference
	Order by plate, figure number and name	
A	Type SA Color-Light Ground Signal Complete, consisting of two, three-indication signal units with stepped or compound lenses **as specified** and mounted on mast as shown. Marker lights, markers, number plates and anchor bolts are not included and must be ordered separately.....	
B	Type SA Color-Light Ground Signal Complete, consisting of two, three-indication signal units with stepped or compound lenses **as specified** and mounted on mast supported on low double door relay case as shown on Plate E0935. Marker lights, markers, number plates and anchor bolts are not included and must be ordered separately. See Plates E0939 and E0941 and specify shelving required in case.....	
B1	as above, except mounted on low single door relay case as shown on Plate E0937.....	
C	Type SA Color-Light Ground Signal Complete, consisting of two, three-indication signal units with stepped or compound lenses **as specified** and mounted on high double door relay case as shown on Plate E0932. Marker lights, markers, number plates and anchor bolts are not included and must be ordered separately. See Plates E0940 and E0941 and specify shelving required in case.....	
C1	as above, except mounted on high single door relay case as shown on Plate E0934.....	
1	Type SA Three-indication Signal Unit Complete, with stepped lens. For details and order references see Plate H2631.....	53051-6

(Continued on following page)

GENERAL RAILWAY SIGNAL COMPANY January 1941

Type SA Color-Light Ground Signals

Two Unit

Drawing references are shown for convenience in checking shipping lists and invoices.

Fig. No.	Name	Drawing Reference
	Order by plate, figure number and name	
1a	as above, except with compound lens. For details and order references see Plate H2635	53051–7
2	Background, as shown, for use with 8⅜″ lens	49162–25
2a	as above, except for use with 10½″ lens	49162–24
3	Hood, as shown, for use with 8⅜″ lens	49127–19
3a	as above, except for use with 10½″ lens	49127–20
4	U Bolt Complete, for fastening signal unit to 5″ pipe	16209–4 Gr. 1
4a	as above, except for fastening signal unit to 4″ pipe	16209–5 Gr. 1
4b	same as Fig. 4 except for fastening signal unit to 6″ pipe	16209–6 Gr. 1
5	Mast, 18′–2″ long of 5″ pipe, with base for mounting on foundation as shown in Fig. A	48848–9 Gr. 18
6	Mast, 14′–7″ long of 5″ pipe, with base for mounting on low relay case as shown in Fig. B	48848–9 Gr. 17
7	Mast, 12′–8″ long of 5″ pipe, with base for mounting on high relay case as shown in Fig. C	48848–9 Gr. 46
8	Pinnacle Complete, as shown, for 5″ mast	56894 Gr. 2
9	Ladder Complete, includes handrails, platform, stays, clamps and bolts. Does not include foundation	310–65 Gr. 5
10	Conduit, 1½″ x 2′–7″ long, includes couplings	48525–2 45688–15 Gr. 1
11	Number Plate, with number as specified, includes brackets and bolts for fastening to 5″ mast	21101–10 Gr. 1
12	Anchor Bolt, 1″–8 x 2′–0″ lg. includes hex. nut and washer	10270–1 Gr. 1 074
13	Foundation, as shown, for ladder	36773
14	Relay Case Complete, welded steel, 3′–8⅛″ high, 3′–2″ wide and 2′–6⅞″ deep, with door on each side. For details and order references see Plate E0935	36006–15

(Continued on following page)

January 1941 GENERAL RAILWAY SIGNAL COMPANY

Type SA Color-Light Ground Signals

Two Unit

Drawing references are shown for convenience in checking shipping lists and invoices.

Fig. No.	Name	Drawing Reference
	Order by plate, figure number and name	
14a	as above, except with door on one side only. For details and order references see Plate E0937	36006–16
15	Relay Case Complete, welded steel, 5′–7⅛″ high, 3′–2″ wide and 2′–6⅞″ deep, with door on each side of case. For details and order references see Plate E0932	36006–14
15a	as above, except with door on one side only. For details and order references see Plate E0934	36006–20
16	Grade Marker, as shown, includes brackets and bolts for fastening to mast. Not included with signal complete and must be ordered separately	53234–3 Gr. 1

PLATE H2605

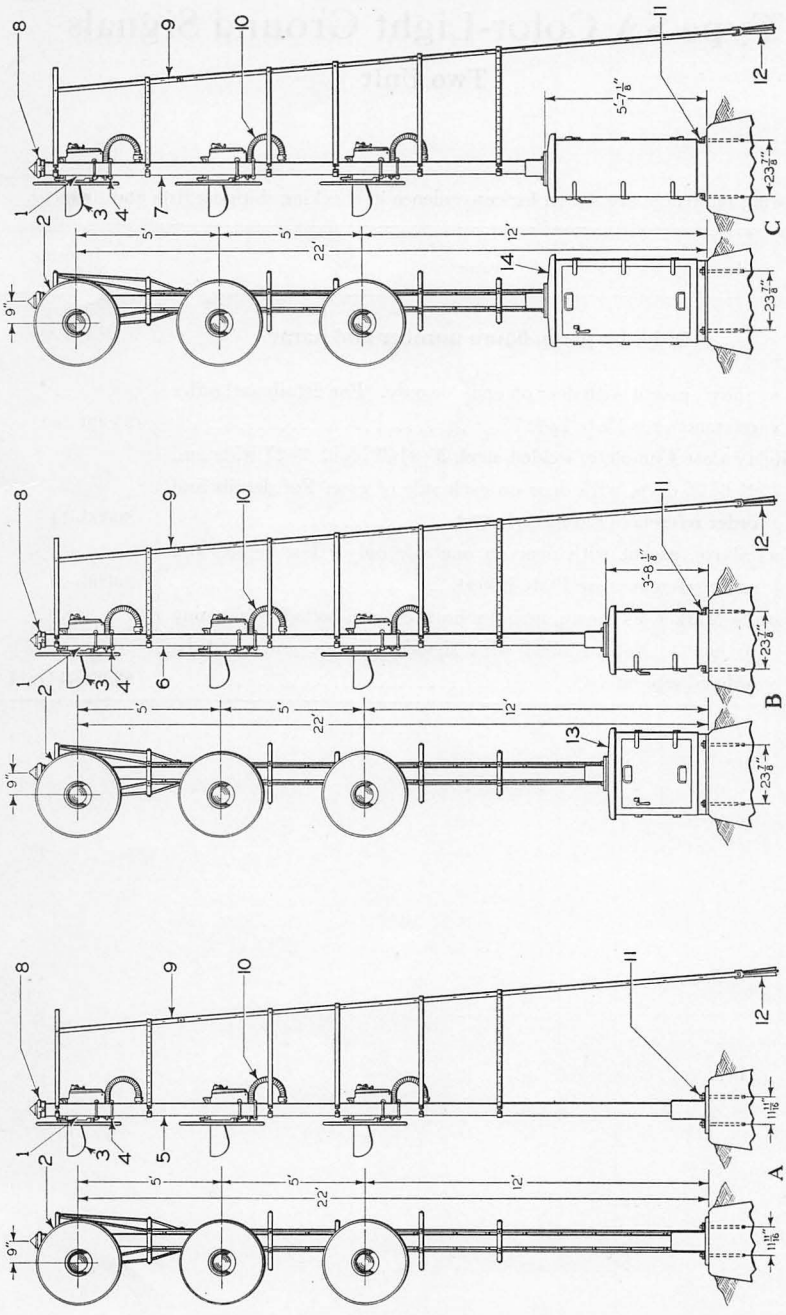

Type SA Color-Light Ground Signals
Three Unit

January 1941 GENERAL RAILWAY SIGNAL COMPANY

Type SA Color-Light Ground Signals

Three Unit

Note: See foreword and ordering information at the beginning of this part.

See Plate H2631 for signal unit with stepped lens and H2635 for signal unit with compound lens.

When masts of greater height than those shown are required or if different spacing between lights is required, please specify on order.

Drawing references are shown for convenience in checking shipping lists and invoices.

Fig. No.	Name	Drawing Reference
	Order by plate, figure number and name	
A	Type SA Color-Light Ground Signal Complete, consisting of three, three-indication signal units with stepped or compound lenses **as specified** and mounted on mast as shown. Marker lights, markers, number plates and anchor bolts are not included and must be ordered separately	
B	Type SA Color-Light Ground Signal Complete, consisting of three, three-indication signal units with stepped or compound lenses **as specified** and mounted on mast supported or low double door relay case as shown on Plate E0935. Marker lights, markers, number plates and anchor bolts are not included and must be ordered separately. See Plates E0939 and E0941 and specify shelving required in case	
B1	as above, except mounted on low single door relay case as shown on Plate E0937	
C	Type SA Color-Light Ground Signal Complete, consisting of three, three-indication signal units with stepped or compound lenses **as specified** and mounted on high double door relay case as shown on Plate E0932. Marker lights, markers, number plates and anchor bolts are not included and must be ordered separately. See Plates E0940 and E0941 and specify shelving required in case	
C1	as above, except mounted on high single door relay case as shown on Plate E0934	
1	Type SA Three-indication Signal Unit Complete, with stepped lens. For details and order references see Plate H2631	53051-6

(Continued on following page)

GENERAL RAILWAY SIGNAL COMPANY January 1941

Type SA Color-Light Ground Signals

Three Unit

Drawing references are shown for convenience in checking shipping lists and invoices.

Fig. No.	Name	Drawing Reference
	Order by plate, figure number and name	
1a	as above, except with compound lens. For details and order references see Plate H2635	53051–7
2	Background, as shown, for use with 8⅜″ lens	49162–25
2a	as above, except for use with 10½″ lens	49162–24
3	Hood, as shown, for use with 8⅜″ lens	49127–19
3a	as above, except for use with 10½″ lens	49127–20
4	U Bolt Complete, for fastening signal unit to 5″ pipe	16209–4 Gr. 1
4a	as above, except for fastening signal unit to 4″ pipe	16209–5 Gr. 1
4b	same as Fig. 4 except for fastening signal unit to 6″ pipe	16209–6 Gr. 1
5	Mast, 23′–4″ long of 5″ pipe, with base for mounting on foundation as shown in Fig. A	48848–9 Gr. 32
6	Mast, 19′–6″ long of 5″ pipe, with base for mounting on low relay case as shown in Fig. B	48848–9 Gr. 42
7	Mast, 17′–7″ long of 5″ pipe, with base for mounting on high relay case as shown in Fig. C	48848–9 Gr. 88
8	Pinnacle Complete, as shown, for 5″ mast	56894 Gr. 2
9	Ladder Complete, includes handrails, platform, stays, clamps and bolts. Does not include foundation	310–93 Gr. 1
10	Conduit, 1½″ x 2′–7″ long, includes couplings	48525–2 45688–15 Gr. 1
11	Anchor Bolt, 1″–8 x 2′–0″ lg., includes hex. nut and washer	10270–1 Gr. 1 074
12	Foundation, as shown for ladder	36773
13	Relay Case Complete, welded steel, 3′–8⅛″ high, 3′–2″ wide and 2′–6⅞″ deep, with door on each side. For details and order references see Plate E0935	36006–15
13a	as above, except with door on one side only. For details and order references see Plate E0937	36006–16

(Continued on following page)

January 1941 GENERAL RAILWAY SIGNAL COMPANY

Type SA Color-Light Ground Signals

Three Unit

Drawing references are shown for convenience in checking shipping lists and invoices.

Fig. No.	Name	Drawing Reference
	Order by plate, figure number and name	
14	Relay Case Complete, welded steel, 5′–7⅛″ high, 3′–2″ wide and 2′–6⅞″ deep, with door on each side of case. For details and order references see Plate E0932	36006–14
14a	as above, except with door on one side only. For details and order references see Plate E0934	36006–20

PLATE H2606

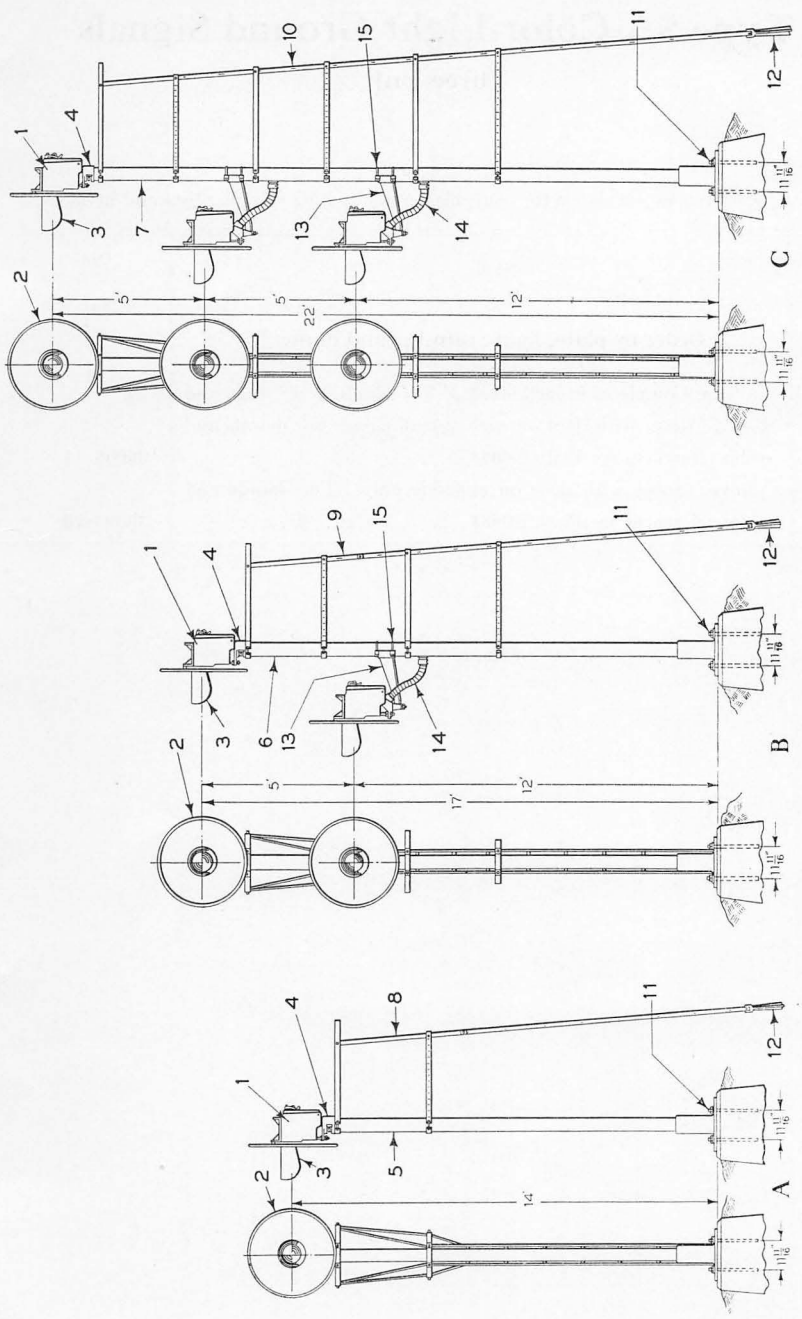

Type SA Color-Light Signals
One, Two and Three Unit

January 1941 GENERAL RAILWAY SIGNAL COMPANY

Type SA Color-Light Ground Signals
One, Two and Three Unit

Note: See foreword and ordering information at the beginning of this part.

See Plate H2631 for signal unit with stepped lens and H2635 for signal unit with compound lens.

When masts of greater height than those shown are required or if different spacing between lights is required, please specify on order.

Drawing references are shown for convenience in checking shipping lists and invoices.

Fig. No.	Name	Drawing Reference
	Order by plate, figure number and name	
A	Type SA Color-Light Ground Signal Complete, consisting of one, three-indication signal unit with stepped or compound lenses **as specified** and mounted on top of mast as shown. Marker lights, markers, number plates, and anchor bolts are not included and must be ordered separately.....	
A1	as above, except mounted on low double door relay case as shown on Plate H2601, Fig. B. See Plate E0935 for relay case and Plates E0939 and E0941 and specify shelving required in case..	
A2	same as Fig. A1, except mounted on low single door relay case as shown on Plate E0937.....	
A3	same as Fig. A, except mounted on high double door relay case as shown on Plate H2601, Fig. C. See Plate E0932 for relay case and Plates E0940 and E0941 and specify shelving required in case.....	
A4	same as Fig. A3, except mounted on high single door relay case as shown on Plate E0934.....	
B	Type SA Color-Light Ground Signal Complete, consisting of two, three-indication signal units with stepped or compound lenses **as specified.** Upper unit mounted on top of mast and lower unit mounted in front of mast as shown. Marker lights, markers, number plates and anchor bolts are not included and must be ordered separately.....	
B1	as above, except mounted on low double door relay case as shown on Plate H2603, Fig. B. See Plate E0935 for relay case and Plates E0939 and E0941 and specify shelving required in case	

(Continued on following page)

GENERAL RAILWAY SIGNAL COMPANY January 1941

Type SA Color-Light Ground Signals

One, Two and Three Unit

Drawing references are shown for convenience in checking shipping lists and invoices.

Fig. No.	Name	Drawing Reference
	Order by plate, figure number and name	
B2	same as Fig. B1, except mounted on low single door relay case as shown on Plate E0937	
B3	same as Fig. B, except mounted on high double door relay case as shown on Plate H2603, Fig. C. See Plate E0932 for relay case and Plates E0940 and E0941 and specify shelving required in case	
B4	same as Fig. B3, except mounted on high single door relay case as shown on Plate E0934	
C	Type SA Color-Light Ground Signal Complete, consisting of three, three-indication signal units with stepped or compound lenses **as specified.** Upper unit mounted on top of mast and lower units mounted in front of mast as shown. Marker lights, markers, number plates, and anchor bolts are not included and must be ordered separately	
C1	as above, except mounted on low double door relay case as shown on Plate H2605, Fig. B. See Plate E0935 for relay case and Plates E0939 and E0941 and specify shelving required in case	
C2	same as Fig. C1, except mounted on low single door relay case as shown on Plate E0937	
C3	same as Fig. C, except mounted on high double door relay case as shown on Plate H2605, Fig. C. See Plate E0932 for relay case and Plates E0940 and E0941 and specify shelving required in case	
C4	same as Fig. C3, except mounted on high single door relay case as shown on Plate E0934	
1	Type SA Three-indication Signal Unit Complete, with stepped lens. For details and order references see Plate H2631	53051-6
1a	as above, except with compound lens. For details and order references see Plate H2635	53051-7

(Continued on following page)

January 1941 GENERAL RAILWAY SIGNAL COMPANY

Type SA Color-Light Ground Signals

One, Two and Three Unit

Drawing references are shown for convenience in checking shipping lists and invoices.

Fig. No.	Name	Drawing Reference
	Order by plate, figure number and name	
2	Background, as shown, for use with 8⅜″ lens	49162–25
2a	as above, except for use with 10½″ lens	49162–24
3	Hood, as shown, for use with 8⅜″ lens	49127–19
3a	as above, except for use with 10½″ lens	49127–20
4	Socket Complete, for mounting signal unit to top of 5″ dia. pipe. (5 9/16″ outside dia.) For details and order references see Plate H2631, Fig. J	54732 Gr. 2
5	Mast, 12′–10″ long of 5″ pipe, with base for mounting on foundation as shown in Fig. A	48848–9 Gr. 1
5a	as above, except 9′–2½″ long, for mounting on low relay case	48848–9 Gr. 2
5b	same as Fig. 5, except 7′–3½″ long, for mounting on high relay case	48848–9 Gr. 39
6	Mast, 16′–0″ long, of 5″ pipe, with base for mounting on foundation as shown in Fig. B	48848–9 Gr. 28
6a	as above, except 12′–5½″ long, for mounting on low relay case	48848–9 Gr. 82
6b	same as Fig. 6, except 10′–5½″ long, for mounting on high relay case	48848–9 Gr. 81
7	Mast, 21′–0″ long, of 5″ pipe, with base for mounting on foundation as shown in Fig. C	48848–9 Gr. 78
7a	as above, except 17′–5½″ long, for mounting on low relay case	48848–9 Gr. 80
7b	same as Fig. 7, except 15′–5½″ long, for mounting on high relay case	48848–9 Gr. 79
8	Ladder Complete, for one unit signal, includes handrails, platform, stays, clamps, and bolts. Does not include foundation	310–26 Gr. 5
9	Ladder Complete, for two unit signal, includes handrails, platform, stays, clamps, and bolts. Does not include foundation	310–65 Gr. 5
10	Ladder Complete, for three unit signal, includes handrails, platforms, stays, clamps, and bolts. Does not include foundation.	
11	Anchor Bolt, 1″–8 x 2′–0″ lg., includes hex. nut and washer	10270–1 Gr. 1 074

(Continued on following page)

GENERAL RAILWAY SIGNAL COMPANY January 1941

Type SA Color-Light Ground Signals

One, Two and Three Unit

Drawing references are shown for convenience in checking shipping lists and invoices.

Fig. No.	Name	Drawing Reference
	Order by plate, figure number and name	
12	Foundation, as shown, for ladder	36773
13	Bracket Complete, for use when signal is mounted in front of pole	53249–3 Gr. 1
14	Conduit, 1½″ x 2′–7″ lg., includes couplings	48525–2 45688–15 Gr. 1
15	"U" Bolt Complete, for fastening bracket, Fig. 13 to 5″ pipe	16209–4 Gr. 1
15a	as above, except for fastening bracket to 4″ pipe	16209–5 Gr. 1
15b	same as Fig. 15, except for fastening bracket to 6″ pipe	16209–6 Gr. 1

Memoranda

PLATE H2607

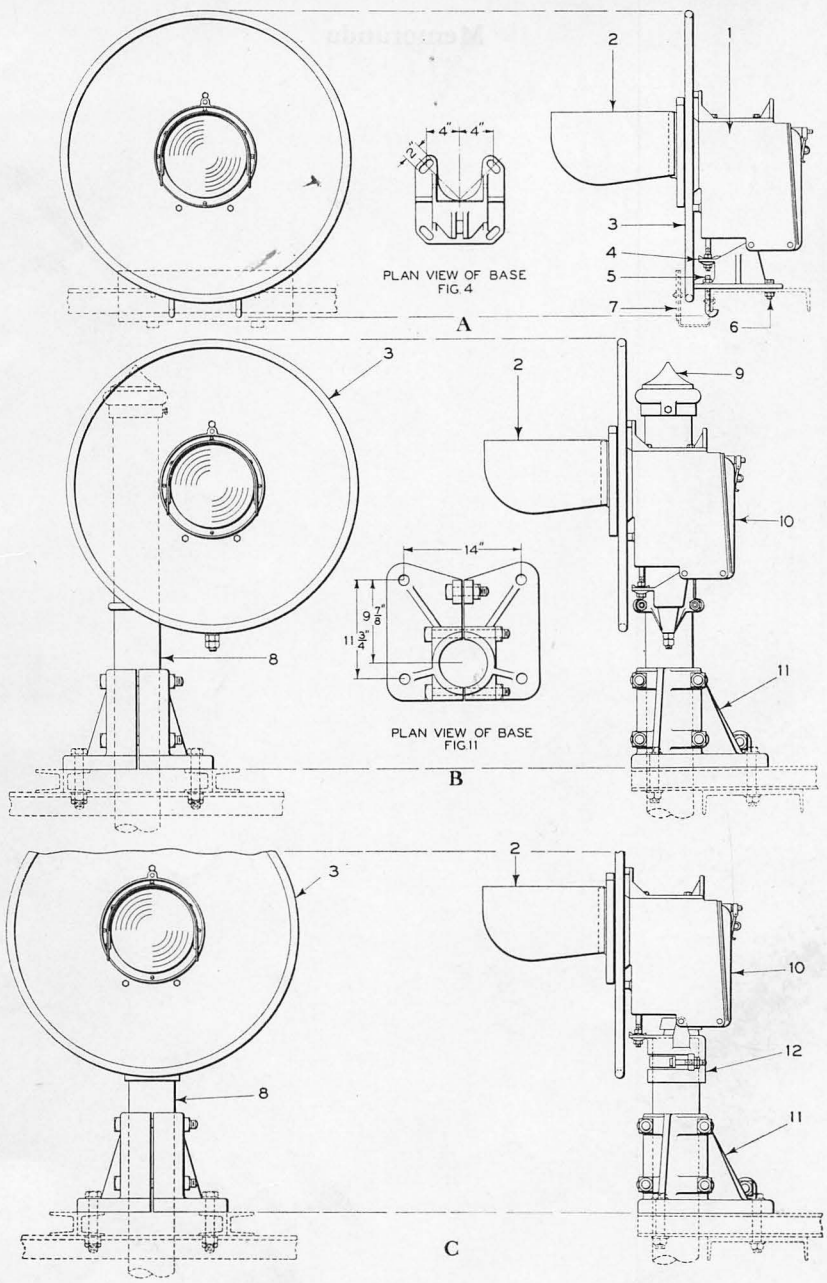

Type SA Color-Light Bridge Signals

January 1941 GENERAL RAILWAY SIGNAL COMPANY

Type SA Color-Light Bridge Signals

Note: See foreword and ordering information at the beginning of this part.

See Plate H2631 for signal unit with stepped lens and H2635 for signal unit with compound lens.

Drawing references are shown for convenience in checking shipping lists and invoices.

Fig. No.	Name	Drawing Reference
	Order by plate, figure number and name	
A	Type SA Color-Light Bridge Signal Complete, consisting of one, three-indication signal unit with stepped or compound lenses **as specified,** and with base for mounting as shown. Number plates are not included and must be ordered separately.....	
B	Type SA Color-Light Bridge Signal Complete, consisting of one, three-indication signal unit with stepped or compound lenses **as specified** and bracket mounted to short mast as shown. Specify length of mast desired. Number plates are not included and must be ordered separately.....	
C	Type SA Color-Light Bridge Signal Complete, consisting of one, three-indication signal unit with stepped or compound lenses **as specified** and mounted on top of short mast as shown. Specify length of mast desired. Number plates are not included and must be ordered separately.....	
1	Type SA Three-indication Signal Unit Complete, with stepped lens. For details and order references see Plate H2631.....	53050–10
1a	as above, except with compound lens. For details and order references see Plate H2635.....	53050–7
2	Hood, as shown, for use with 8⅜″ dia. lens.....	49127–19
2a	as above, except for use with 10½″ dia. lens.....	49127–20
3	Background, as shown, for use with 8⅜″ dia. lens.....	49162–25
3a	as above, except for use with 10½″ dia. lens.....	49162–24
4	Base, for mounting signal unit to bridge as shown in Fig. A.....	53070–5
5	Hook Bolt, for fastening base, Fig. 4 to cord of bridge as shown. Includes nut and lock washer. Specify length.....	635–41
6	Bolt, ¾″–10 x 2¼″ sq. hd. with sq. nut, for fastening base, Fig. 4, to bridge as shown.....	0617 35660 029

(*Continued on following page*)

GENERAL RAILWAY SIGNAL COMPANY January 1941

Type SA Color-Light Bridge Signals

Drawing references are shown for convenience in checking shipping lists and invoices.

Fig. No.	Name	Drawing Reference
	Order by plate, figure number and name	
7	Number Plate, with number as specified, includes brackets and bolts for fastening to bridge	
8	Mast, of 5″ pipe, length as specified	
9	Pinnacle Complete, as shown, for 5″ mast	56894 Gr. 2
10	Type SA Three-indication Signal Unit Complete, with stepped lens. For details and order references see Plate H2631	53051-6
10a	as above, except with compound lens. For details and order references see Plate H2635	53051-7
11	Base Complete, for 5″ mast, for use as shown in Figs. B and C, when signal units are mounted above base	43951-2 Gr. 1
11a	as above, except for use when mast extends through base for suspended signal units	43951-2 Gr. 2
12	Socket Complete, for mounting signal unit to top of 5″ dia. pipe (5 9/16″ outside dia.) For details and order references see Plate H2631, Fig. J	54732 Gr. 2

Memoranda

PLATE H2609

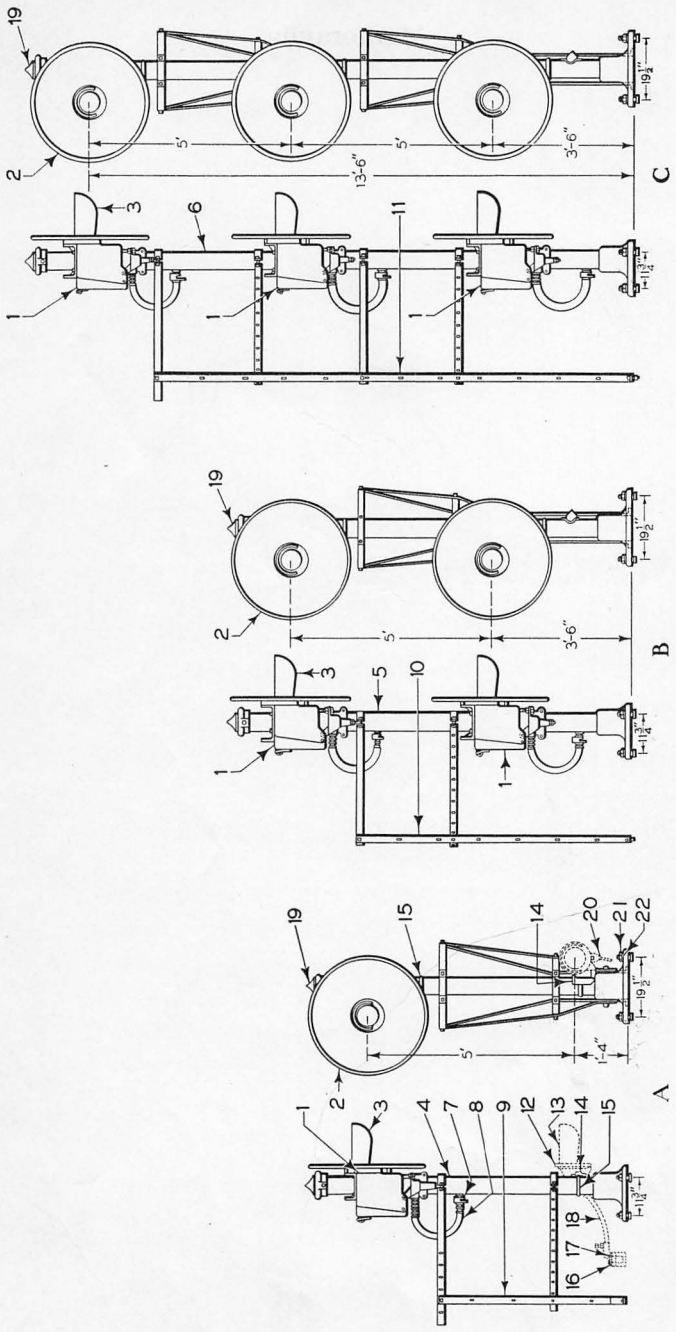

Type SA Color-Light Bracket Signals

Type SA Color-Light Bracket Signals

Note: See foreword and ordering information at the beginning of this part.

See Plate H2631 for signal unit with stepped lens and H2635 for signal unit with compound lens.

When masts of greater height than those shown are required or if different spacing between lights is required, please specify on order.

Drawing references are shown for convenience in checking shipping lists and invoices.

Fig. No.	Name	Drawing Reference
	Order by plate, figure number and name	
A	Type SA Color-Light Bracket Signal Complete, consisting of one, three-indication signal unit with stepped or compound lenses **as specified** and with base for mounting as shown. Marker lights are not included and must be ordered separately	45906–97
B	Type SA Color-Light Bracket Signal Complete, consisting of two, three-indication signal units with stepped or compound lenses **as specified** and with base and ladder as shown	45906–97
C	Type SA Color-Light Bracket Signal Complete, consisting of three, three-indication signal units with stepped or compound lenses **as specified** and with base and ladder as shown	45906–97
1	Type SA Three-indication Signal Unit Complete, with stepped lens. For details and order references see Plate H2631	53051–6
1a	as above, except with compound lens. For details and order references see Plate H2635	53051–7
2	Background, as shown, for use with 8⅜″ dia. lens	49162–25
2a	as above, except for use with 10½″ dia. lens	49162–24
3	Hood, as shown, for use with 8⅜″ dia. lens	49127–19
3a	as above, except for use with 10½″ dia. lens	49127–20
4	Pole and Base, for one unit signal, Fig. A	48848–1 Gr. 8
5	Pole and Base, for two unit signal, Fig. B	48848–1 Gr. 21
6	Pole and Base, for three unit signal, Fig. C	48848–1 Gr. 16
7	Coupling, as shown, for 1½″ flexible conduit	45688–15 Gr. 1
8	Conduit, 1½″ x 2′–7″ lg., for signal unit	48525–2
9	Ladder Complete, includes handrails, platform, stays, clamps, and bolts. For use with Fig. A	310–94 Gr. 1

(Continued on following page)

GENERAL RAILWAY SIGNAL COMPANY January 1941

Type SA Color-Light Bracket Signals

Drawing references are shown for convenience in checking shipping lists and invoices.

Fig. No.	Name	Drawing Reference
	Order by plate, figure number and name	
10	Ladder Complete, includes handrails, platform, stays, clamps, and bolts. For use with Fig. B	310–94 Gr. 5
11	Ladder Complete, includes handrails, platform, stays, clamps, and bolts. For use with Fig. C	310–95 Gr. 1
12	Type W Light Unit Complete, for use as marker light. For details and order references see Section H, Part 32	53127
12a	as above, except Type SA Light Unit. For details and order references see Plate H2639	
13	Hood, as shown, for Type W Light Unit	49127–19
14	Clamp Complete, as shown, includes U bolt, for supporting Type W Light Unit, for 5″ mast	53126 Gr. 1 16209–4 Gr. 1
15	U Bolt Complete, for fastening signal units to 5″ pipe	16209–4 Gr. 1
15a	as above, except for fastening signal units to 4″ pipe	16209–5 Gr. 1
15b	same as Fig. 15, except for fastening signal units to 6″ pipe	16209–6 Gr. 1
16	Coupling Complete, for 1½″ flexible conduit. For use on trunking as shown	45688–3 Gr. 1
17	Wood Screw, No. 14 x 1¼″ rd. hd. for fastening coupling Fig. 16 to trunking	35116
18	Conduit Complete, as shown	41659 Gr. 9
19	Pinnacle Complete, as shown, for 5″ mast	56894 Gr. 2
20	Lock Nut, 1¼″ hex., for Type W Light Unit	47154
21	Bolt, 1″ x 4″ sq. hd., with hex. nut, for mounting signal	29800
22	Washer, 1″, for bolt Fig. 21	074

Memoranda

PLATE H2611

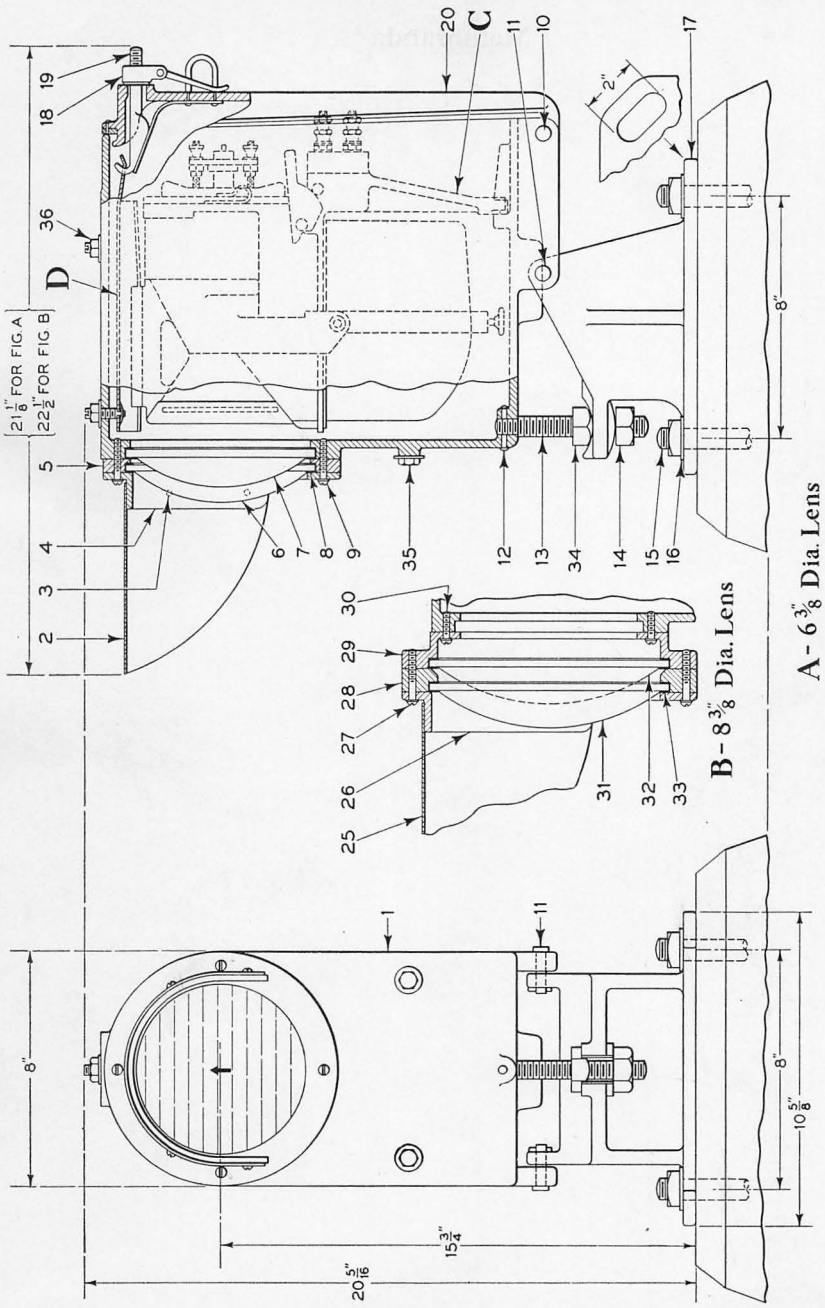

A- 6 3/8" Dia. Lens

Type SA Color-Light Dwarf Signals
With Stepped Lenses

Type SA Color-Light Dwarf Signals
With Stepped Lenses

Note: See foreword and ordering information at the beginning of this part.

Other color combinations than those shown below may be supplied if required.

Lamps are not included with signals complete and must be ordered separately.

Unless otherwise specified anchor bolts as shown will be furnished with signals complete.

Signals are designed to operate on the following voltages 4, 7.5–8, 10 and 12 volts d-c., however they may be equipped with an a-c. mechanism to operate on voltages as listed on Plate H2663.

For dwarf signals with compound lenses see Plate H2614. See Plate H2616 for dwarf signals arranged for socket mounting and signals mounted on junction box.

Drawing references are shown for convenience in checking shipping lists and invoices.

Fig. No.	Name	Drawing Reference
	Order by plate, figure number and name	
A	Type SA Color-Light Dwarf Signal Complete, three indication—red, yellow and green. Signal is equipped with a 6⅜″ dia., 3¾″ focus lens and a 25 degree deflecting roundel. (This lens combination deflects a part of the main beam upward through an angle of 25 degrees).....	
	Order must specify the following:	
	1—Voltage upon which signal is to operate if d-c. or frequency and both line and local voltages if a-c.....	
	2—See Plate H2629 for various methods of bringing wires into signal and specify fittings required.....	
	3—If plug coupler is required same must be specified.....	53050–10
A1	as above, except two indication—red and yellow.....	53050–10
A2	same as Fig. A, except two indication—purple and yellow.....	53050–10
B	Type SA Color-Light Dwarf Signal Complete, three indication—red, yellow and green. Signal is equipped with a 8⅜″ dia. 5″ focus, hot-spot lens and a 20 degree deflecting roundel. (This lens combination deflects a part of the main beam upward through an angle of 20 degrees).....	
	Order must specify the following:	
	1—Voltage upon which signal is to operate if d-c. or frequency and both line and local voltages if a-c.....	

(Continued on following page)

GENERAL RAILWAY SIGNAL COMPANY January 1941

Type SA Color-Light Dwarf Signals

With Stepped Lenses

Drawing references are shown for convenience in checking shipping lists and invoices.

Fig. No.	Name	Drawing Reference
	Order by plate, figure number and name	
	2—See Plate H2629 for various methods of bringing wires into signal and specify fittings required	
	3—If plug coupler is required same must be specified	53050–10
B1	as above, except two indication—red and yellow	53050–10
B2	same as Fig. B, except two indication—purple and yellow	53050–10
C	D-c. Mechanism Complete, for details and order references see Plates H2649 to H2655	
C1	as above, except a-c. mechanism, for details and order references see Plate H2663	
D	Slide Complete, for mechanism, includes studs for attaching to case	56421 Gr. 6
1	Case, housing for mechanism, having slide arrangement Fig. D, includes studs for cams of mechanism	53071–16 441–122
1a	as above, except for mechanism without slide arrangement Fig. D, includes stud for hasp and studs for cams of mechanism	53071 441–121 441–122
2	Hood, as shown, for 6⅜″ dia. lens	49127–18
3	Screw, No. 10–32 x ¼″ rd. hd., for fastening hood to outer ring	2438–9
4	Outer Ring, as shown, for 6⅜″ dia. lens	43983–30
5	Adapter, as shown, for 6⅜″ dia., deflecting roundel	43983–31
6	Deflecting Roundel, 6⅜″ dia., deflects part of main beam upward through an angle of 25 degrees. For Fig. A	9238–60
6a	as above, except 25 degree spredlite with close-up deflection	9238–65
7	Lens, 6⅜″ dia., 3¾″ focus	53119
8	Gasket, as shown, for 6⅜″ dia. lens and roundel	13014–56
9	Screw, 5/16″–18 x 1½″ rd. hd., with lock washer, for fastening outer ring and adapter to case	33287–8 0623–1
10	Pin, ⅜″ x 1 13/16″, hinge for door	730–33
11	Pin, 7/16″ x 1 9/16″, for fastening case to base	730–21
12	Taper Pin, No. 2 x 1¼″, for fastening stud Fig. 13 to case	28349

(*Continued on following page*)

Type SA Color-Light Dwarf Signals

With Stepped Lenses

Drawing references are shown for convenience in checking shipping lists and invoices.

Fig. No.	Name	Drawing Reference
	Order by plate, figure number and name	
13	Stud, for obtaining vertical adjustment of signal	980–10
14	Nut, ¾″–10 hex., for adjusting stud	0272–1
15	Anchor Bolt, ¾″–10 x 18″, with sq. nut	36182
16	Washer, for anchor bolt	35703
17	Base, as shown, for mounting case	53070–5
18	Hasp, as shown, includes nut, with ½″–13 thread, for case having slide arrangement, Fig. D	9524 9525–6 7568
18a	as above, except has nut with ½″–24 thread, for case without slide arrangement, Fig. D	9524 9525 7568
19	Lock Latch, as shown, threaded ½″–13 for hasp nut, for case having slide arrangement Fig. D	53106–2
19a	as above, except ½″–13 thread, for case without slide arrangement Fig. D	53106–1
19b	same as Fig. 19a except with ½″–24 thread	53106
20	Door Complete, for case with slide arrangement Fig. D, includes gasket, latch, hasp and all riveted parts	53057 Gr. 3
20a	as above, except for case without slide arrangement Fig. D, includes gasket, latch, hasp and all riveted parts	53057 Gr. 1
25	Hood, as shown, for 8⅜″ dia. lens	49127–29
26	Outer Ring, as shown, for 8⅜″ dia. lens	43983–35
27	Screw, 5/16″–18 x 1¾″ rd. hd., with lock washer, for fastening outer ring and adapter to inner ring. For use with Fig. B	33287–13 0623–1
28	Adapter, as shown, for use in applying deflecting roundel, to 8⅜″ dia. lens. For Fig. B	43983–~~34~~ 46
29	Inner Ring, as shown, for 8⅜″ dia. lens	43983–~~46~~ 34
30	Screw, 5/16″–18 x ¾″ rd. hd., with lock washer, for fastening inner ring to case. For Fig. B	33287–6 0623–1

(Continued on following page)

GENERAL RAILWAY SIGNAL COMPANY January 1941

Type SA Color-Light Dwarf Signals

With Stepped Lenses

Drawing references are shown for convenience in checking shipping lists and invoices.

Fig. No.	Name	Drawing Reference
	Order by plate, figure number and name	
31	Deflecting Roundel, 8⅜″ dia., deflects part of main beam upward through an angle of 20 degrees. For Fig. B	9238–38
32	Lens, hot-spot, 8⅜″ dia., 5″ focus, for Fig. B	36733–7
33	Gasket, as shown, for 8⅜″ dia. lens and roundel	13014–57
34	Nut, ¾″–10 hex., for adjusting stud	646–3
35	Screw, ⅜″–16 x ⅝″ hex. hd., with lock washer, for case	0395–4 19867–2
36	Nut, ⅜″–16 x ⅜″ th. hex., with washer, for slide Fig. D	1156–2 19867–2

Memoranda

PLATE H2614

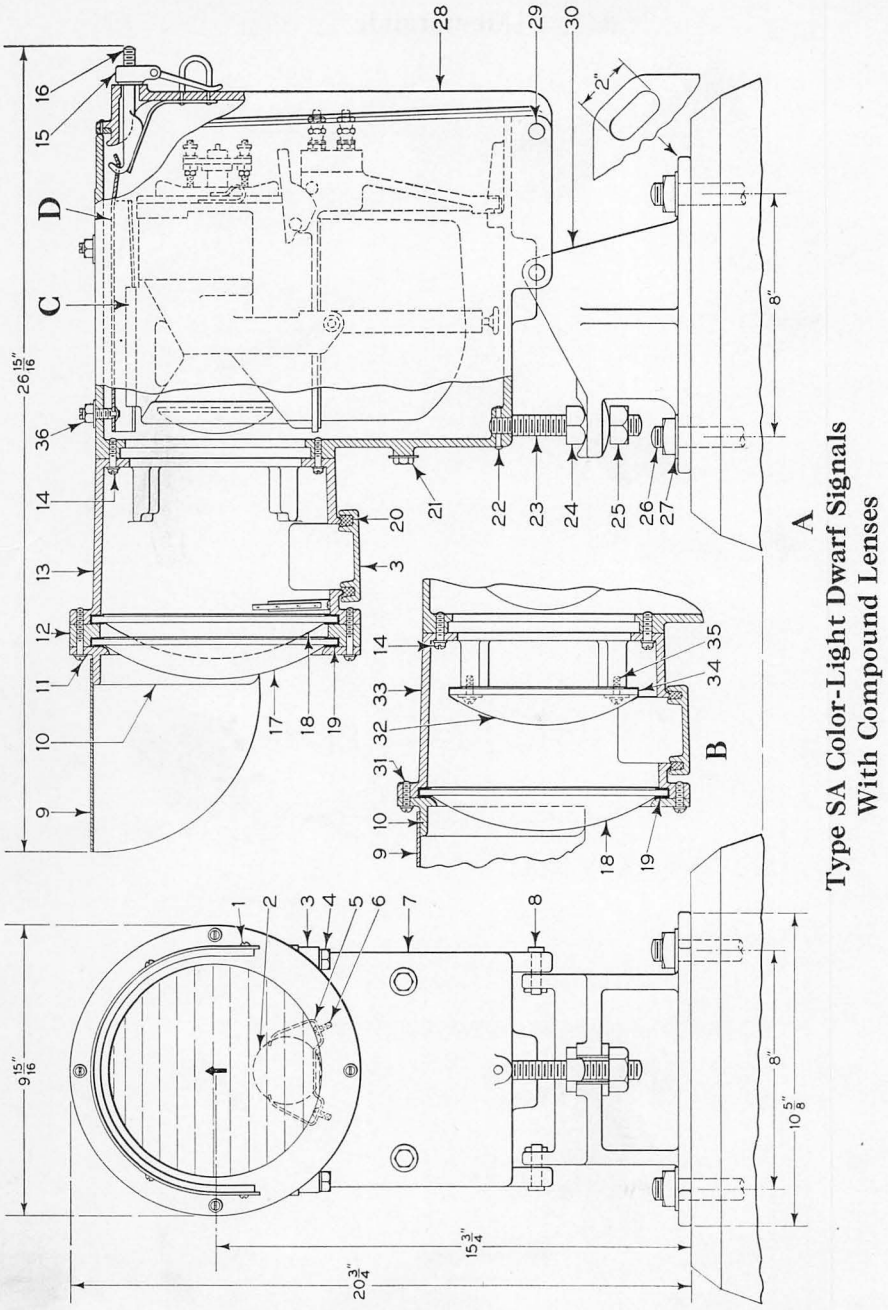

Type SA Color-Light Dwarf Signals
With Compound Lenses

January 1941 GENERAL RAILWAY SIGNAL COMPANY

Type SA Color-Light Dwarf Signals

With Compound Lenses

Note: See foreword and ordering information at the beginning of this part.

Other color combinations than those shown below may be supplied if required.

Lamps are not included with signals complete and must be ordered separately.

Unless otherwise specified, anchor bolts as shown will be furnished with signals complete.

Signals are designed to operate on the following voltages: 4, 7.5–8, 10 and 12 volts d-c., however they may be equipped with an a-c. mechanism to operate on voltages and frequencies as listed on Plate H2663.

Signals are assembled with roundel Fig. 2, having deflecting prisms, set to deflect directly upward for close-up indication. This roundel may be rotated to change this angle as conditions require.

For dwarf signals with stepped lenses see Plate H2611.

See Plate H2616 for dwarf signals arranged for socket mounting and signals mounted on junction box.

Drawing references are shown for convenience in checking shipping lists and invoices.

Fig. No.	Name	Drawing Reference
	Order by plate, figure number and name	
A	Type SA Color-Light Dwarf Signal Complete, three indication—red, yellow and green. Signal is equipped with an 8⅜″ dia. compound lens and a 20 degree outer deflecting roundel. (This lens combination deflects a part of the main beam upward through an angle of 20 degrees.).....	
	Order must specify the following:	
	1—Voltage upon which signal is to operate if d-c. or frequency and both line and local voltages if a-c.....	
	2—See Plate H2629 for various methods of bringing wires into signal and specify fittings required.....	
	3—If plug coupler is required same must be specified.....	53050–7
A1	as above, except two indication—red and yellow.....	53050–7
A2	same as Fig. A, except two indication—purple and yellow.....	53050–7

(Continued on following page)

GENERAL RAILWAY SIGNAL COMPANY January 1941

Type SA Color-Light Dwarf Signals

With Compound Lenses

Drawing references are shown for convenience in checking shipping lists and invoices.

Fig. No.	Name	Drawing Reference
	Order by plate, figure number and name	
B	Type SA Color-Light Dwarf Signal Complete, three indication—red, yellow and green. Signal is equipped with a 25 degree 6⅜″ dia. inner roundel and 8⅜″ dia. compound lens. (This lens combination deflects a part of the main beam upward through an angle of 25 degrees).....	
	Order must specify the following:	
	1—Voltage upon which signal is to operate if d-c., or frequency and both line and local voltages if a-c.....	
	2—See Plate H2629 for various methods of bringing wires into signal and specify fittings required.....	
	3—If plug coupler is required same must be specified.....	53050-7
B1	as above, except two indication—red and yellow.....	53050-7
B2	same as Fig. B, except two indication—purple and yellow.....	53050-7
C	D-c. Mechanism Complete, for details and order references see Plates H2649 to H2655.....	
C1	as above, except a-c. mechanism, for details and order references see Plate H2663.....	
D	Slide Complete, for mechanism, includes studs for attaching to case	56421 Gr. 6
1	Screw, No. 10-32 x ¼″ rd. hd., for fastening hood to outer ring...	2438-9
2	Roundel, with deflecting prisms.....	54264
3	Cover, for hand hole.....	49584-6
4	Screw, ⅜″-16 x 1¼″ hex. hd., with lock washer, for fastening cover to adapter.....	2472-12 0569
5	Holder, for roundel Fig. 2.....	54248-1
6	Screw, No. 8-32 x ¼″ rd. hd., for fastening holder Fig. 5 to adapter	2553-7 43058-1
7	Case, housing for mechanism having slide arrangement Fig. D, includes studs for cams of mechanism.....	53071-16 441-122

(*Continued on following page*)

Type SA Color-Light Dwarf Signals

With Compound Lenses

Drawing references are shown for convenience in checking shipping lists and invoices.

Fig. No.	Name	Drawing Reference
	Order by plate, figure number and name	
7a	as above, except for mechanism without slide arrangement Fig. D, includes stud for hasp and studs for cams of mechanism	53071 441–121 441–122
8	Pin, 7/16″ x 1 9/16″, for fastening case to base	730–21
9	Hood, as shown, for signal	49127–29
10	Outer Ring, as shown, for 8 3/8″ dia. lens	43983–35
11	Screw, 5/16″–18 x 1 1/2″ rd. hd., with lock washer, for fastening rings Figs. 10 and 12 to adapter	33287–8 0623–1
12	Ring, as shown, for signal	43983–46
13	Adapter, as shown, for signal Fig. A	54243–3
14	Screw, 5/16″–18 x 3/4″ fil. hd., with lock washer, for fastening adapter to case	16398–4 0623–1
15	Hasp, as shown, includes nut with 1/2″–13 thread, for case having slide arrangement Fig. D	9524 9525–6 7568
15a	as above, except has nut with 1/2″–24 thread, for case without slide arrangement Fig. D	9524 9525 7568
16	Lock Latch, as shown, threaded 1/2″–13 for hasp nut, for case having slide arrangement Fig. D	53106–2
16a	as above, except 1/2″–13 thread, for case without slide arrangement Fig. D	53106–1
16b	same as Fig. 16a, except with 1/2″–24 thread	53106
17	Deflecting Roundel, 8 3/8″ dia., deflects part of main beam upward through an angle of 20 degrees	9238–38
18	Lens, 8 3/8″ dia., 11 1/2″ focus, for signal	54249–2
19	Gasket, for use between lens and adapter	13014–57
20	Gasket, for cover Fig. 3	43460

(Continued on following page)

GENERAL RAILWAY SIGNAL COMPANY January 1941

Type SA Color-Light Dwarf Signals

With Compound Lenses

Drawing references are shown for convenience in checking shipping lists and invoices.

Fig. No.	Name	Drawing Reference
	Order by plate, figure number and name	
21	Screw, 3/8"-16 x 5/8" hex. hd., with lead washer, for case	0395-4 19867-2
22	Taper Pin, No. 2 x 1 1/4" for fastening stud Fig. 23 to case	28349
23	Stud, for obtaining vertical adjustment of signal	980-10
24	Nut, 3/4"-10 hex., for adjusting stud	646-3
25	Nut, 3/4"-10 hex., for adjusting stud	0272-1
26	Anchor Bolt, 3/4"-10 x 18", with sq. nut	36182
27	Washer, for anchor bolt	35703
28	Door Complete, for case with slide arrangement Fig. D, includes gasket, latch, hasp and all riveted parts	53057 Gr. 3
28a	as above, except for case without slide arrangement Fig. D, includes gasket, latch, hasp and all riveted parts	53057 Gr. 1
29	Pin, 3/8" x 1 13/16", hinge for door	730-33
30	Base, as shown, for mounting case	53070-5
31	Screw, 5/16"-18 x 3/4" rd. hd., with lock washer, for fastening outer ring to adapter	33287-6 0623-1
32	Deflecting Roundel, 6 3/8" dia., deflects part of main beam upward through an angle of 25 degrees	9238-60
32a	as above, except 25 degree spredlite with close-up deflection	9238-65
33	Adapter, as shown, for use with 8 3/8" dia. outer lens and 6 3/8" dia. inner roundel	54243-4
34	Gasket, for roundel Fig. 32	13014-47
35	Screw, No. 8-32 x 3/8" rd. hd., with clip and washers, for fastening roundel Fig. 32 to adapter	2553-11 18547-15 43058-1
36	Nut, 3/8"-16 x 3/8" th. hex., with washer, for slide Fig. D	1156-2 19867-2

Memoranda

PLATE H2616

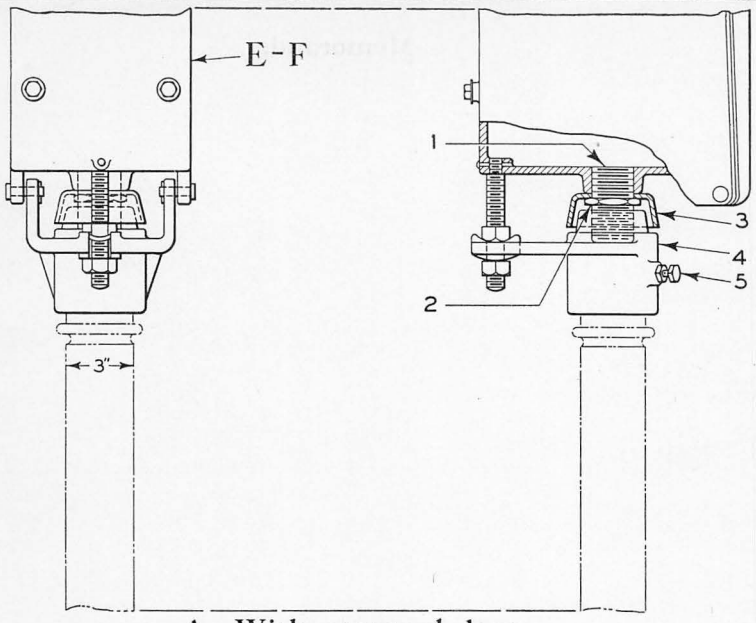

A - With stepped lens
B - With compound lens

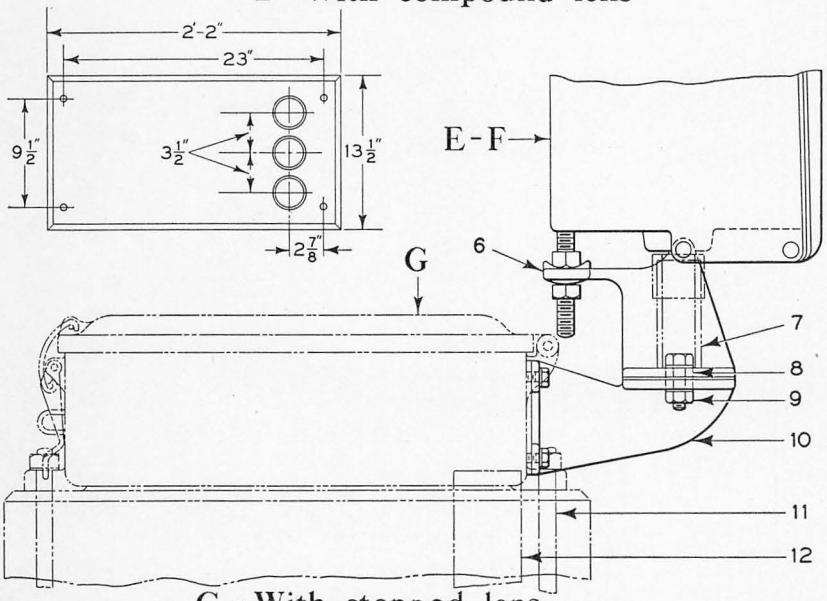

C - With stepped lens
D - With compound lens

Type SA Color-Light Dwarf Signals
For Socket or Junction Box Mounting

January 1941 GENERAL RAILWAY SIGNAL COMPANY

Type SA Color-Light Dwarf Signals

With Stepped or Compound Lenses For Socket or Junction Box Mounting

Note: See foreword and ordering information at the beginning of this part. Other color combinations than those shown below may be supplied if required.

Lamps are not included with signals complete and must be ordered separately.

Signals are designed to operate on the following voltages: 4, 7.5–8, 10 and 12 volts d-c., however, they may be equipped with an a-c. mechanism to operate on voltages and frequencies as listed on Plate H2663.

Drawing references are shown for convenience in checking shipping lists and invoices.

Fig. No.	Name	Drawing Reference
	Order by plate, figure number and name	
A	Type SA Color-Light Dwarf Signal Complete with stepped lens combination, three indication—red, yellow and green. Arranged for socket mounting as shown, which is not included with signal complete.....	
	Order must specify the following:	
	1—See Plate H2611 and specify whether 6⅜″ or 8⅜″ dia. lens combination is required.....	
	2—Voltage upon which signal is to operate if d-c. or frequency and both line and local voltages if a-c.....	53050–10
B	Type SA Color-Light Dwarf Signal Complete, with compound lens combination, three indication—red, yellow and green, arranged for socket mounting as shown which is not included with signal complete.....	
	Order must specify the following:	
	1—See Plate H2614 and specify lens combination required....	
	2—Voltage upon which signal is to operate if d-c., or frequency and both line and local voltages if a-c.....	53050–7
C	Type SA Color-Light Dwarf Signal Complete, with stepped lens combination, three indication—red, yellow and green. Arranged for mounting on junction box as shown which is not included with signal complete.....	

(Continued on following page)

GENERAL RAILWAY SIGNAL COMPANY January 1941

Type SA Color-Light Dwarf Signals

With Stepped or Compound Lenses For Socket or Junction Box Mounting

Drawing references are shown for convenience in checking shipping lists and invoices.

Fig. No.	Name	Drawing Reference
	Order by plate, figure number and name	
	Order must specify the following:	
	1—See Plate H2611 and specify whether 6⅜″ or 8⅜″ dia. lens combination is required	
	2—Voltage upon whichl signa is to operate if d-c. or frequency and both line and local voltages if a-c	53050–10
D	Type SA Color-Light Dwarf Signal Complete with compound lens combination, three indication—red, yellow and green. Arranged for mounting on junction box which is not included with signal complete	
	Order must specify the following:	
	1—See Plate H2614 and specify lens combination required	
	2—Voltage upon which signal is to operate if d-c. or frequency and both line and local voltages if a-c	53050–7
E	Signal Unit Complete, with stepped lens, for details not shown on this plate see H2611	
F	Signal Unit Complete, with compound lens, for details not shown on this plate see H2614	
G	Junction Box Complete, for signals Figs. C and D	6226–14
1	Nipple, 1½″ std., for bottom of case	47915–2
2	Lock Nut, 1½″ std., for nipple	0827
3	Shield, for bottom of case	54733
4	Socket, for mounting signal on parkway cable inlet	11660–6
5	Set Screw, ½″–13 x 1½″ hex. hd., with lock nut, for locking socket to pipe	0551–1 7244–1
6	Base, as shown, for signals Figs. C and D	53070–2
7	Hose, 1½″ x 4¾″, for base	52313–5
8	Nipple, 1¼″, for use between base and bracket	15745–10

(Continued on following page)

January 1941 GENERAL RAILWAY SIGNAL COMPANY

Type SA Color-Light Dwarf Signals

With Stepped or Compound Lenses For Socket or Junction Box Mounting

Drawing references are shown for convenience in checking shipping lists and invoices.

Fig. No.	Name	Drawing Reference
	Order by plate, figure number and name	
9	Bolt, 5/8"–11 x 1 3/4" hex. hd., with hex. nut and washers, for fastening base to bracket	45938–3 0113 2400
10	Bracket, for fastening signal to junction box	55033
11	Hook Bolt, 3/4"–10 x 12", with washer, for fastening junction box to foundation	635–3 Gr. 1 029
12	Conduit, 2 1/2" I.D. x 3 1/16" O.D. x 30 7/8" lg., for signal	46190–25

PLATE H2618

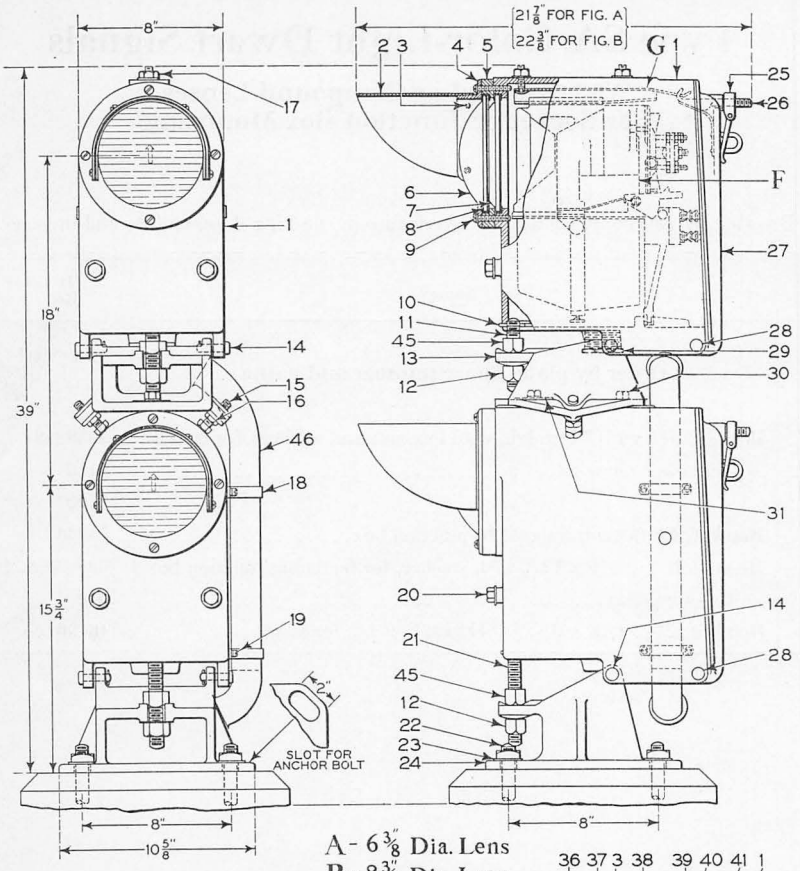

A- 6 3/8" Dia. Lens
B- 8 3/8" Dia. Lens

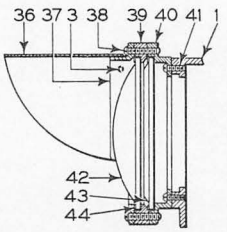

8 3/8" Dia. Lens

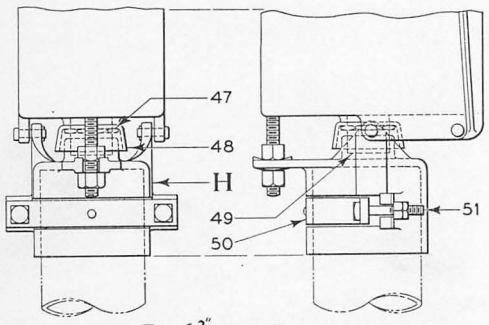

D- 6 3/8" Dia. Lens
E - 8 3/8" Dia. Lens

Type SA Color-Light Dwarf Signals
With Stepped Lenses
Two Unit

January 1941 GENERAL RAILWAY SIGNAL COMPANY

Type SA Color-Light Dwarf Signals

With Stepped Lenses
Two Unit

Note: See foreword and ordering information at the beginning of this part.

Other color combinations than those shown below may be supplied if required.

Lamps are not included with signals complete and must be ordered separately.

Unless otherwise specified anchor bolts as shown will be furnished with signals complete.

Signals are designed to operate on the following voltages: 4, 7.5–8, 10 and 12 volts d-c., however they may be equipped with an a-c. mechanism to operate on voltages and frequencies as listed on Plate H2663.

For dwarf signals with compound lenses see Plate H2620.

Drawing references are shown for convenience in checking shipping lists and invoices.

Fig. No.	Name	Drawing Reference
	Order by plate, figure number and name	
A	Type SA Color-Light Dwarf Signal Complete, consisting of two signal units for mounting as shown, both units having a 6⅜″ dia. 3¾″ focus, lens and a 25 degree deflecting roundel. (This lens combination deflects a part of the main beam upward through an angle of 25 degrees).....	
	Order must specify the following:	
	1—Voltage upon which signal is to operate if d-c. or frequency and both line and local voltages if a-c.....	
	2—Color indications desired in each signal unit.....	
	3—See Plate H2629 for various methods of bringing wires into signal and specify fittings required.....	
	4—If plug coupler is required same must be specified.....	53050-3
B	Type SA Color-Light Dwarf Signal Complete, consisting of two signal units for mounting as shown, both units having an 8⅜″ dia., 5″ focus, hot-spot lens and a 20 degree deflecting roundel. (This lens combination deflects a part of the main beam upward through an angle of 20 degrees).....	

(Continued on following page)

GENERAL RAILWAY SIGNAL COMPANY January 1941

Type SA Color-Light Dwarf Signals

With Stepped Lenses
Two Unit

Drawing references are shown for convenience in checking shipping lists and invoices.

Fig. No.	Name	Drawing Reference
	Order by plate, figure number and name	
	Order must specify the following:	
	1—Voltage upon which signal is to operate if d-c. or frequency and both line and local voltages if a-c.....	
	2—Color indications desired in each signal unit.....	
	3—See Plate H2629 for various methods of bringing wires into signal and specify fittings required.....	
	4—If plug coupler is required same must be specified.....	53050-3
D	Type SA Color-Light Dwarf Signal Complete, consisting of two signal units arranged for socket mounting on 5″ pipe as shown, both units having a 6⅜″ dia., 3¾″ focus lens and a 25 degree deflecting roundel. (This lens combination deflects a part of the main beam upward through an angle of 25 degrees).....	
	Order must specify the following:	
	1—Voltage upon which signal is to operate if d-c., or frequency and both line and local voltages if a-c.....	
	2—Color indications desired in each signal unit.....	
	3—If plug coupler is required same must be specified.....	
E	Type SA Color-Light Dwarf Signal Complete, consisting of two signal units arranged for socket mounting on 5″ pipe as shown, both units having an 8⅜″ dia., 5″ focus hot-spot lens and a 20 degree deflecting roundel. (This lens combination deflects a part of the main beam upward through an angle of 20 degrees)	
	Order must specify the following:	
	1—Voltage upon which signal is to operate if d-c., or frequency and both line and local voltages if a-c.....	
	2—Color indications desired in each signal unit.....	
	3—If plug coupler is required same must be specified.....	
F	D-c. Mechanism Complete, for details and order references see Plates H2649 to H2655.....	

(*Continued on following page*)

Type SA Color-Light Dwarf Signals

With Stepped Lenses
Two Unit

Drawing references are shown for convenience in checking shipping lists and invoices.

Fig. No.	Name	Drawing Reference
	Order by plate, figure number and name	
F1	as above, except a-c. mechanism, for details and order references see Plate H2663	
G	Slide Complete, for mechanism, includes studs for attaching to case	56421 Gr. 6
H	Socket Complete, for mounting signal to 5″ pipe, includes socket, clamp Fig. 50 and screws Fig. 51	54732 Gr. 2
1	Case, housing for mechanism having slide arrangement Fig. G, includes studs for cams of mechanism	53071-16 441-122
1a	as above, except for mechanism without slide arrangement Fig. G, includes stud for hasp and studs for cams of mechanism	53071 441-121 441-122
2	Hood, as shown, for 6⅜″ dia. lens	49127-18
3	Screw, No. 10-32 x ¼″ rd. hd., for fastening hood to outer ring	2438-9
4	Outer Ring, as shown, for 6⅜″ dia. lens	43983-30
5	Adapter, as shown, for 6⅜″ dia. deflecting roundel	43983-31
6	Deflecting Roundel, 6⅜″ dia., deflects part of main beam upward through an angle of 25 degrees. For Fig. A	9238-60
6a	as above, except 25 degree spredlite with close-up deflection	9238-65
7	Lens, 6⅜″ dia., 3¾″ focus	53119
8	Gasket, as shown, for 6⅜″ dia. lens and roundel	13014-56
9	Screw, 5/16″-18 x 1½″ rd. hd., with lock washer, for fastening outer ring and adapter to case	33287-8 0623-1
10	Taper Pin, No. 2 x 1¼″, for fastening stud Fig. 11 to case	28349
11	Stud, for obtaining vertical adjustment of upper signal unit	980-17
12	Nut, ¾″-10 hex., for adjusting studs Figs. 11 and 21	0272-1
13	Base, as shown, for mounting upper unit to lower unit	53070-1
14	Pin, 7/16″ x 1 9/16″, with cotter, for fastening case to base	730-21 0663
15	Screw, ½″-13 x 1¾″ hex. hd., for adjustment of upper signal unit	5221-1

(Continued on following page)

GENERAL RAILWAY SIGNAL COMPANY January 1941

Type SA Color-Light Dwarf Signals

With Stepped Lenses
Two Unit

Drawing references are shown for convenience in checking shipping lists and invoices.

Fig. No.	Name	Drawing Reference
	Order by plate, figure number and name	
16	Nut, ½″–13 x ¼″ th. hex., for screw, Fig. 15	12754
17	Nut, ⅜″–16 x ⅜″ th. hex., with washer, for slide Fig. G	1156–2 19867–2
18	Clamp, for fastening coupling to case	318–57
19	Screw, No. 14–24 x ½″ fil. hd., for fastening clamp to case, includes washer and strap	49863 0510 38280–139
20	Screw, ⅜″–16 x ⅝″ hex. hd., with lock washer, for case	0395–4 19867–2
21	Stud, for obtaining vertical adjustment of lower signal unit	980–10
22	Anchor Bolt, ¾″–10 x 18″, with sq. nut	36182
23	Washer, for anchor bolt	35703
24	Base, as shown, for mounting lower signal unit	53070
25	Hasp, as shown, includes nut with ½″–13 thread, for case having slide arrangement Fig. G	9524 9525–6 7568
25a	as above, except has nut with ½″–24 thread, for case without slide arrangement Fig. G	9524 9525 7568
26	Lock Latch, as shown, threaded ½″–13 for hasp nut, for case having slide arrangement Fig. G	53106–2
26a	as above, except ½″–13 thread, for case without slide arrangement, Fig. G	53106–1
26b	same as Fig. 26a, except with ½″–24 thread	53106
27	Door Complete, for case with slide arrangement Fig. G, includes gasket, latch, hasp and all riveted parts	53057 Gr. 3
27a	as above, except for case without slide arrangement Fig. G, includes gasket, latch, hasp and all riveted parts	53057 Gr. 1

(Continued on following page)

Type SA Color-Light Dwarf Signals

With Stepped Lenses
Two Unit

Drawing references are shown for convenience in checking shipping lists and invoices.

Fig. No.	Name	Drawing Reference
	Order by plate, figure number and name	
28	Pin, 3/8" x 1 13/16" with cotter, hinge for door	730-33 0663
29	Nipple, 1 1/2", for upper signal unit	39998
30	Screw, 3/8"-16 x 7/8" hex. hd., with lock washer, for mounting upper unit to lower unit	38171-1 0569
31	Washer, for front screw, Fig. 30, only	37525
36	Hood, as shown, for 8 3/8" dia. lens	49127-29
37	Outer Ring, as shown, for 8 3/8" dia. lens	43983-35
38	Screw, 5/16"-18 x 1 3/4" rd. hd., with lock washer, for fastening outer ring and adapter to inner ring. For use with 8 3/8" dia. lens	33287-13 0623-1
39	Adapter, as shown, for use in applying deflecting roundel to 8 3/8" dia. lens	43983-46
40	Inner Ring, as shown, for 8 3/8" dia. lens	43983-34
41	Screw, 5/16"-18 x 3/4" rd. hd., with lock washer, for fastening inner ring to case	33287-6 0623-1
42	Deflecting Roundel, 8 3/8" dia., deflects part of main beam upward through an angle of 20 degrees. For use with 8 3/8" dia. lens	9238-38
43	Lens, hot-spot, 8 3/8" dia., 5" focus	36733-7
44	Gasket, as shown, for 8 3/8" dia. lens and roundel	13014-57
45	Nut, 3/4"-10 hex. for adjusting stud	646-3
46	Pipe, for wires to upper signal unit	49151-18
46a	as above, except cut off on dotted line	49151-30
47	Lock Nut, for nipple Fig. 49	0827
48	Shield, for nipple Fig. 49	54733
49	Nipple, for case	47915-2
50	Clamp, only for socket	317-28 Gr. 2
51	Screw, 1/2"-13 x 3 1/2" sq. hd., with hex. nuts for clamp	53137 26747 7244-1

PLATE H2620

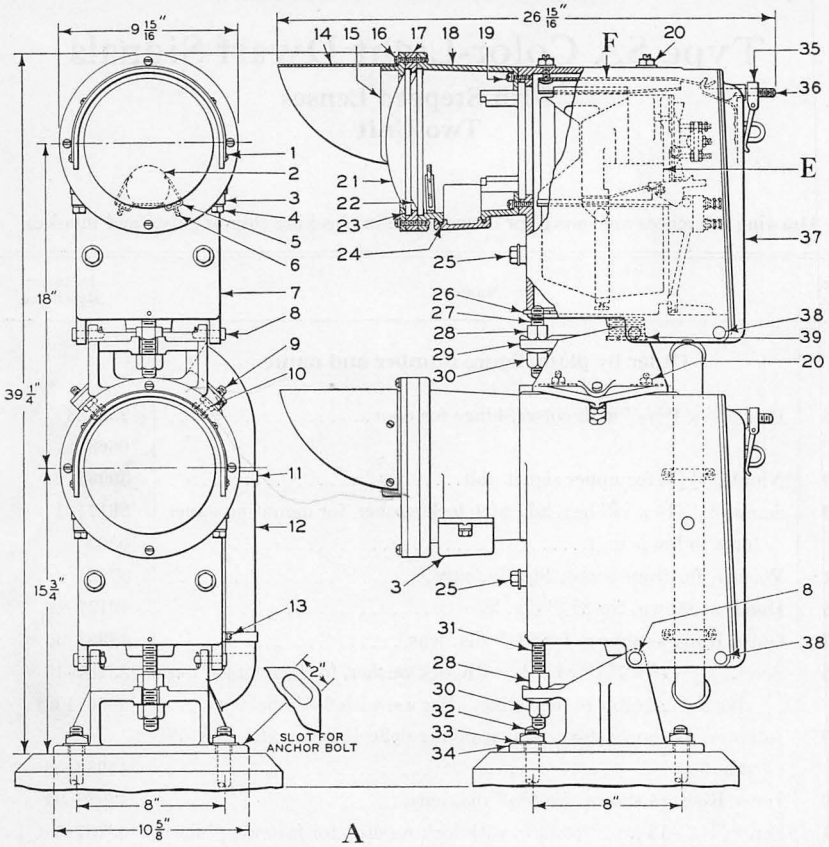

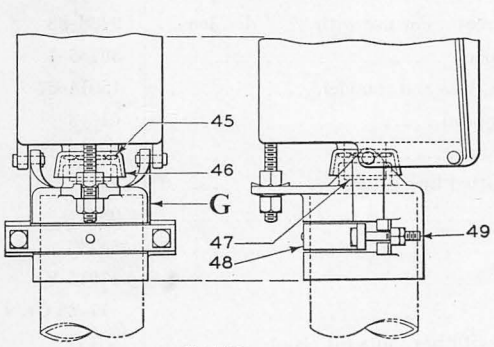

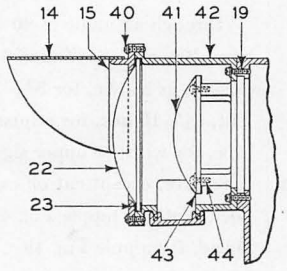

C - D

Type SA Color-Light Dwarf Signals
With Compound Lenses
Two Unit

Type SA Color-Light Dwarf Signals

With Compound Lenses
Two Unit

Note: See foreword and ordering information at the beginning of this part.

Other color combinations than those shown below may be supplied if required.

Lamps are not included with signals complete and must be ordered separately.

Unless otherwise specified anchor bolts as shown will be furnished with signals complete.

Signals are designed to operate on the following voltages: 4, 7.5–8, 10 and 12 volts d-c., however they may be equipped with a-c. mechanism to operate on voltages and frequencies as listed on Plate H2663.

Signals are assembled with roundel Fig. 2, having deflecting prisms, set to deflect directly upward for close-up indication. This roundel may be rotated to change this angle as conditions require.

For dwarf signals with stepped lenses see Plate H2618.

Drawing references are shown for convenience in checking shipping lists and invoices.

Fig. No.	Name	Drawing Reference
	Order by plate, figure number and name	
A	Type SA Color-Light Dwarf Signal Complete, consisting of two signal units for mounting as shown, both units having an 8 3/8" dia. compound lens and a 20 degree outer deflecting roundel. (This lens combination deflects a part of the main beam upward through an angle of 20 degrees).....	
	Order must specify the following:	
	1—Voltage upon which signal is to operate if d-c., or frequency and both line and local voltages if a-c.....	
	2—Color indications desired in each signal unit.....	
	3—See Plate H2629 for various methods of bringing wires into signal and specify fittings required.....	
	4—If plug coupler is required same must be specified.....	53050–3
B	Type SA Color-Light Dwarf Signal Complete, consisting of two signal units for mounting as shown, both units having a 25 degree, 6 3/8" dia. inner roundel and an 8 3/8" dia. compound lens. (This lens combination deflects a part of the main beam upward through an angle of 25 degrees).....	

(*Continued on following page*)

GENERAL RAILWAY SIGNAL COMPANY January 1941

Type SA Color-Light Dwarf Signals

With Compound Lenses
Two Unit

Drawing references are shown for convenience in checking shipping lists and invoices.

Fig. No.	Name	Drawing Reference
	Order by plate, figure number and name	
	Order must specify the following:	
	1—Voltage upon which signal is to operate if d-c., or frequency and both line and local voltages if a-c.....	
	2—Color indications desired in each signal unit.....	
	3—See Plate H2629 for various methods of bringing wires into signal and specify fittings required.....	
	4—If plug coupler is required same must be specified.....	53050–3
C	Type SA Color-Light Dwarf Signal Complete, consisting of two signal units arranged for socket mounting on 5″ pipe as shown, both units having an 8⅜″ dia. compound lens and a 20 degree outer deflecting roundel. (This lens combination deflects a part of the main beam upward through an angle of 20 degrees)	
	Order must specify the following:	
	1—Voltage upon which signal is to operate if d-c., or frequency and both line and local voltages if a-c.....	
	2—Color indications desired in each signal unit.....	
	3—If plug coupler is required same must be specified.....	
D	Type SA Color-Light Dwarf Signal Complete, consisting of two signal units arranged for socket mounting on 5″ pipe as shown, both units having a 25 degree, 6⅜″ dia., inner roundel and an 8⅜″ dia. compound lens. (This lens combination deflects a part of the main beam upward through an angle of 25 degrees)	
	Order must specify the following:	
	1—Voltage upon which signal is to operate if d-c., or frequency and both line and local voltages if a-c.....	
	2—Color indications desired in each signal unit.....	
	3—If plug coupler is required same must be specified.....	
E	D-c. Mechanism Complete. For details and order references see Plates H2649 to H2655.....	

(*Continued on following page*)

Type SA Color-Light Dwarf Signals

With Compound Lenses
Two Unit

Drawing references are shown for convenience in checking shipping lists and invoices.

Fig. No.	Name	Drawing Reference
	Order by plate, figure number and name	
E1	as above, except a-c. mechanism, for details and order references see Plate H2663	
F	Slide Complete, for mechanism, includes studs for attaching to case	56421 Gr. 6
G	Socket Complete, for mounting signal to 5″ pipe, includes socket, clamp Fig. 48, and screws Fig. 49	54732 Gr. 2
1	Screw, No. 10–32 x ¼″ rd. hd., for fastening hood to outer ring	2438–9
2	Roundel, with deflecting prisms	54264
3	Cover, for hand hole	49584–6
4	Screw, ⅜″–16 x 1¼″ hex. hd., with lock washer, for fastening cover to adapter	2472–12 0569
5	Holder, for glass Fig. 2	54248–1
6	Screw, No. 8–32 x ¼″ rd. hd., for fastening holder Fig. 5 to adapter	2553–7 43058–1
7	Case, housing for mechanism having slide arrangement Fig. F, includes studs for cams of mechanism	53071–16 441–122
7a	as above, except for mechanism without slide arrangement Fig. F, includes stud for hasp and studs for cams of mechanism	53071 441–121 441–122
8	Pin, 7/16″ x 1 9/16″, with cotter, for fastening case to base	730–21 0663
9	Screw, ½″–13 x 1¾″ hex. hd., for adjustment of upper signal unit	5221–1
10	Nut, ½″–13 x ¼″ th. hex., for screw Fig. 9	12754
11	Clamp, for fastening coupling to base	318–57
12	Pipe, for wires to upper signal unit	49151–18
12a	as above, except cut off on dotted line	49151–30
13	Screw, No. 14–24 x ½″ fil. hd., for fastening clamp to case, includes washer and strap	49863 0510 38280–139
14	Hood, as shown, for signal	49127–29
15	Outer Ring, as shown, for 8⅜″ dia. lens	43983–35

(*Continued on following page*)

GENERAL RAILWAY SIGNAL COMPANY January 1941

Type SA Color-Light Dwarf Signals

With Compound Lenses
Two Unit

Drawing references are shown for convenience in checking shipping lists and invoices.

Fig. No.	Name	Drawing Reference
	Order by plate, figure number and name	
16	Screw, 5/16″–18 x 1½″ rd. hd., with lock washer, for fastening rings Figs. 15 and 17 to adapter	33287–8 0623–1
17	Ring, as shown, for signal	43983–46
18	Adapter, as shown, for signal	54243–3
19	Screw, 5/16″–18 x ¾″ fil. hd., with lock washer, for fastening adapter to case	16398–4 0623–1
20	Nut, ⅜″–16 x ⅜″ th. hex., with washer, for slide Fig. F	1156–2 19867–2
21	Deflecting Roundel, 8⅜″ dia., deflects part of main beam upward through an angle of 20 degrees	9238–38
22	Lens, 8⅜″ dia., 11½″ focus	54249–2
23	Gasket, for lens and roundel	13014–57
24	Gasket, for cover Fig. 3	43460
25	Screw, ⅜″–16 x ⅝″ hex. hd., with lead washer, for case	0395–4 19867–2
26	Taper Pin, No. 2 x 1¼″, for fastening stud Fig. 27 to case	28349
27	Stud, for obtaining vertical adjustment of upper signal unit	980–17
28	Nut, ¾″–10 hex., for adjusting studs Figs. 27 and 31	646–3
29	Base, as shown, for mounting upper unit to lower unit	53070–1
30	Nut, ¾″–10 hex., for adjusting studs Figs. 27 and 31	0272–1
31	Stud, for obtaining vertical adjustment of lower signal unit	980–10
32	Anchor Bolt, ¾″–10 x 18″, with sq. nut	36182
33	Washer, for anchor bolt	35703
34	Base, as shown, for mounting lower signal unit	53070–5
35	Hasp, as shown, includes nut, with ½″–13 thread, for case having slide arrangement Fig. F	9524 9525–6 7568
35a	as above, except has nut with ½″–24 thread, for case without slide arrangement Fig. F	9524 9525 7568

(*Continued on following page*)

Type SA Color-Light Dwarf Signals

With Compound Lenses
Two Unit

Drawing references are shown for convenience in checking shipping lists and invoices.

Fig. No.	Name	Drawing Reference
	Order by plate, figure number and name	
36	Lock Latch, as shown, threaded ½″–13 for hasp nut, for case having slide arrangement Fig. F	53106–2
36a	as above, except ½″–13 thread, for case without slide arrangement Fig. F	53106–1
36b	same as Fig. 36a, except with ½″–24 thread	53106
37	Door Complete, for case with slide arrangement Fig. F, includes gasket, latch, hasp and all riveted parts	53057 Gr. 3
37a	as above, except for case without slide arrangement Fig. F, includes gasket, latch, hasp and all riveted parts	53057 Gr. 1
38	Pin, ⅜″ x 1 13/16″, with cotter, hinge for door	730–33 0663
39	Nipple, 1½″ for upper signal unit	39998
40	Screw, 5/16″–18 x ¾″ rd. hd., with lock washer, for fastening outer ring to adapter	33287–6 0623–1
41	Deflecting Roundel, 6⅜″ dia., deflects part of main beam upward through angle of 25 degrees	9238–60
41a	as above, except 25 degree spredlite with close-up deflection	9238–65
42	Adapter, as shown, for use with 8⅜″ dia. outer lens and 6⅜″ dia. inner roundel	54243–4
43	Gasket, for roundel Fig. 41	13014–47
44	Screw, No. 8–32 x ⅜″ rd. hd., with clip and washers, for fastening roundel Fig. 41 to adapter	2553–11 18547–15 43058–1
45	Lock Nut, for nipple Fig. 47	0827
46	Shield, for nipple Fig. 47	54733
47	Nipple, for case	47915–2
48	Clamp, only, for socket	317–28 Gr. 2
49	Screw, ½″–13 x 3½″ sq. hd., with hex. nuts for clamp	53137 26747 7244–1

PLATE H2629

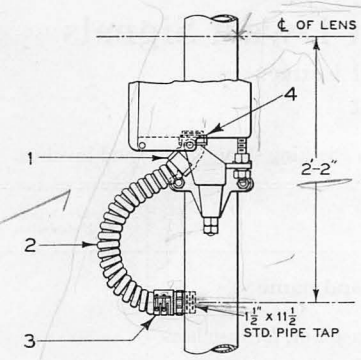

FIG. R

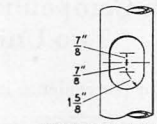

PIPE DRILLING FOR COUPLING FIG. 7

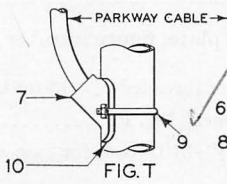

FIG. T

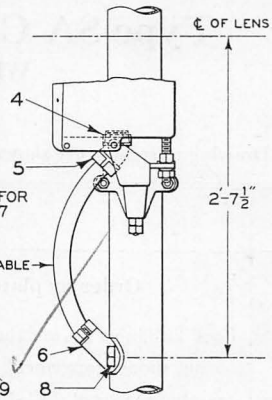

FIG. S

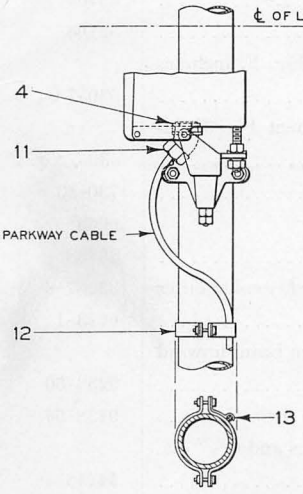

FIG. U

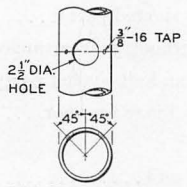

PIPE DRILLING FOR COUPLING FIG. 6

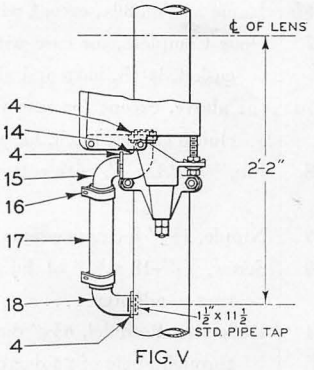

FIG. V

FOR HIGH SIGNALS

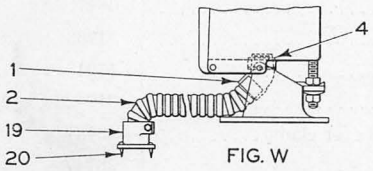

FIG. W

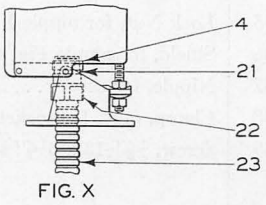

FIG. X

FOR DWARF SIGNALS

Conduit Entrances for High and Dwarf Signals

January 1941 GENERAL RAILWAY SIGNAL COMPANY

Conduit Entrances for High and Dwarf Signals

Note: Fig. R illustrates method of bringing 1½″ flexible conduit into signal unit from 5″ pipe. This method requires the following parts 1–1, 1–2 and 1–3 (lock nut Fig. 4 is included with coupling Fig. 1). The pipe must be tapped with 1½″ x 11½ standard pipe tap as shown on opposite page.

Fig. S illustrates one method of bringing parkway cable into signal unit from 5″ pipe. This method requires the following parts 2–4, 1–5, 1–6 and 2–8. The outside diameter of the parkway cable must be specified to enable us to provide the proper size couplings. The pipe must be drilled for a 2½″ diameter hole and tapped for two screws Fig. 8 as shown in sketch on opposite page.

Fig. T is similar to Fig. S except coupling Fig. 7 is used. This method requires the following parts 2–4, 1–5, 1–7, 1–9 and 1–10. The outside diameter of the parkway cable must be specified to enable us to provide the proper size couplings. The pipe must be fitted with an oblong hole as shown in sketch on opposite page.

Fig. U illustrates method of bringing small parkway cable or loose wiring up the side of the pipe and into the signal unit. This method requires the following parts 2–4, 1–11, 1–12 and 1–13. No pipe drilling is required with this method.

Fig. V illustrates method of bringing split rubber conduit into signal unit from 5″ pipe. This method requires the following parts 4–4, 1–14, 1–15, 2–16, 1–17 and 1–18. The pipe must be tapped with 1½″ x 11½ standard pipe tap as shown on opposite page.

Fig. W illustrates method of bringing 1½″ flexible conduit into dwarf signal from trunking. This method requires the following parts 1–1, 1–2, 1–19 and 4–20. (Lock nut Fig. 4 is included with coupling Fig. 1).

Fig. X illustrates method of bringing 1½″ flexible conduit into dwarf signal directly from base. This method requires the following parts 2–4, 1–21, 1–22 and 1–23.

When it is desired to order a certain group of parts as shown on Plate H2629, the order need only specify the Fig. required, for instance Fig. R would include all the necessary parts for using 1½″ flexible conduit.

When parkway cable is to be used, order must specify the outside diameter.

Drawing references are shown for convenience in checking shipping lists and invoices.

Fig. No.	Name	Drawing Reference
	Order by plate, figure number and name	
1	Coupling Complete, for 1½″ flexible conduit, includes lock nut...	46418–2 Gr. 1
2	Flexible Conduit, 1½″ x 2′–7″ lg., as shown.....	48525–2

(Continued on following page)

PLATE H2629

Conduit Entrances for High and Dwarf Signals

Drawing references are shown for convenience in checking shipping lists and invoices.

Fig. No.	Name	Drawing Reference
	Order by plate, figure number and name	
3	Coupling Complete, for 1½″ conduit	45688–15 Gr. 1
4	Lock Nut, only, for couplings Figs. 1, 5, 11, 14, 15, 18 and 22	0827
5	Coupling, only, for parkway cable. **Specify outside diameter of cable**	44515
6	Coupling Complete, for parkway cable. **Specify outside diameter of cable**	45688–30
7	Coupling Complete, for parkway cable. **Specify outside diameter of cable**	45688–49
8	Screw, ⅜″–16 x 1″ sq. hd., with washer and lock washer, for fastening coupling Fig. 6 to pipe	2471–1 1926 0569
9	"U" Bolt, ½″–13, for attaching clamp Fig. 7 to 5″ pipe	5183 Gr. 7
10	Gasket, for coupling Fig. 7	13014–158
11	Coupling, only, for parkway cable	44515–10
12	Clamp Complete, for fastening cable to 5″ pipe	317 Gr. 1
13	Clip, for holding cable	51068–5
14	Coupling, only, for split conduit	45689–74
15	Coupling, only, for split conduit	45689–76
16	Clamp, for fastening split conduit to couplings	43959–10
17	Conduit, split rubber, 1⅞″ I.D. x 2 7/16″ O.D. x 12½″ long	55274–6
18	Coupling, only, for split conduit	45689–75
19	Coupling Complete, for attaching 1½″ conduit to trunking	45688–3 Gr. 1
20	Wood Screw, No. 14 x 1¼″ rd. hd., for fastening coupling Fig. 19 to trunking	35116
21	Connector, for coupling Fig. 22	44515
22	Coupling, for flexible conduit. **Specify size of conduit**	46418
23	Flexible Conduit. Specify size and length required	

Memoranda

PLATE H2631

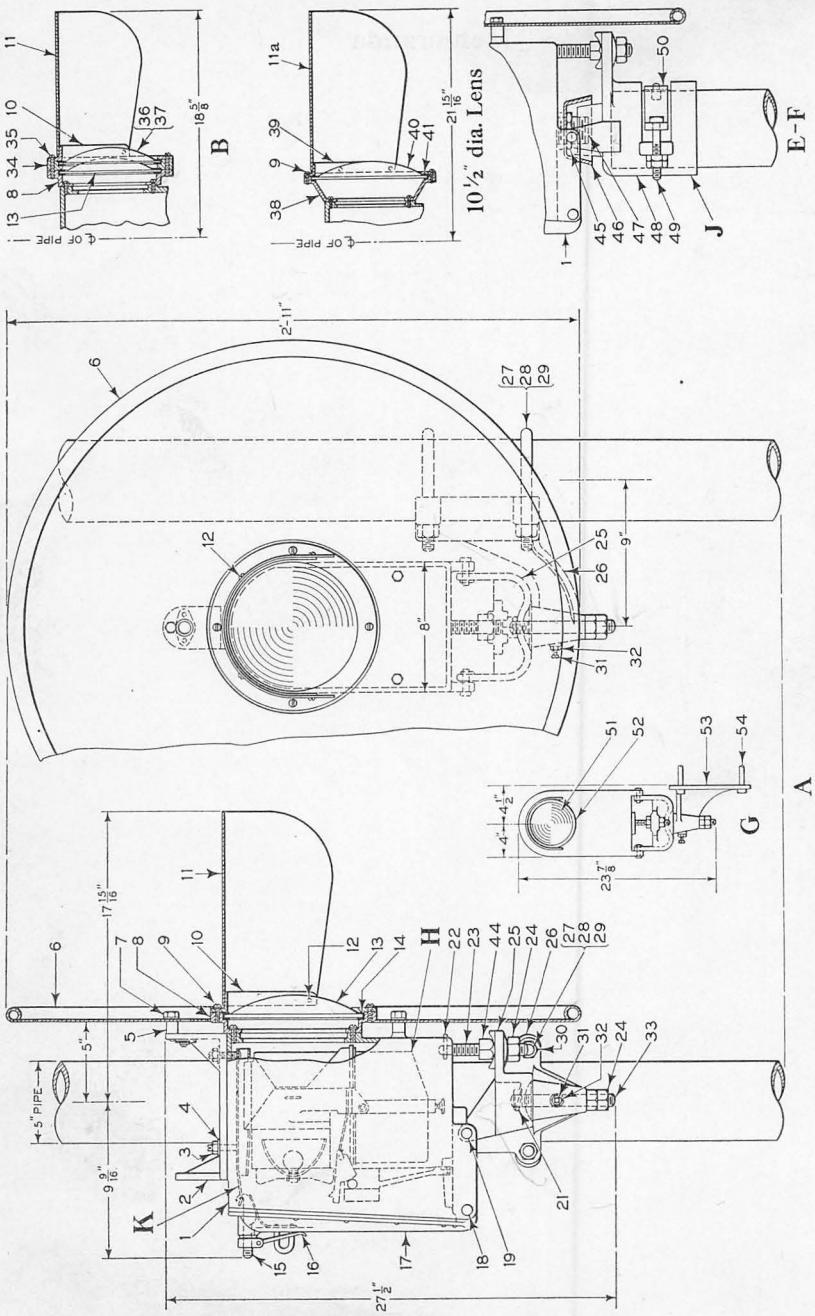

Type SA Color-Light Signal Unit
With Stepped Lenses

January 1941 GENERAL RAILWAY SIGNAL COMPANY

Type SA Color-Light Signal Unit
With Stepped Lenses

Note: See foreword and ordering information at the beginning of this part.

Unless otherwise specified, signal units will be furnished to give three indications, namely: red, yellow and green. If two indication signal unit is required, same must be specified giving color of indications.

Other color combinations may be supplied if required.

Signals are designed to operate on the following voltages: 4, 7.5–8, 10 and 12 volts d-c. However, they may be equipped with an a-c. mechanism to operate on voltages and frequencies as listed on Plate H2663.

Signal units will be furnished for mounting to 5″ pipe (5 5/16″ outside diameter) unless otherwise specified.

Lamps, conduits and conduit couplings are not included and must be ordered separately.

Signal units are assembled with the hot-spot lens having its secondary beam deflecting downward and to the left, facing the lens, at an angle of 30 degrees from the vertical. This lens may be rotated to change this angle as conditions require, and can be adjusted on signals with or without deflecting or spredlite roundels.

Drawing references are shown for convenience in checking shipping lists and invoices.

Fig. No.	Name	Drawing Reference
	Order by plate, figure number and name	
A	Type SA Color-Light Signal Unit Complete, for mounting to 5″ dia. pipe, three indication, equipped with an 8 3/8″ dia., 5″ focus, hot-spot lens.....	
	Order must specify the following:	
	1—Voltage upon which signal is to operate if d-c. or frequency and both line and local voltages if a-c.....	
	2—See Plate H2629 for various methods of bringing wires into signal and specify fittings required.....	
	3—If plug coupler is required same must be specified.....	53051-6
B	Type SA Color-Light Signal Unit Complete, for mounting to 5″ dia. pipe, three indication, equipped with an 8 3/8″ dia., 5″ focus hot-spot lens and an 8 3/8″ dia., 20 degree deflecting roundel. This lens combination is arranged to spread the main beam through an angle of 20 degrees to one side of the beam axis.....	

(Continued on following page)

GENERAL RAILWAY SIGNAL COMPANY January 1941

Type SA Color-Light Signal Unit

With Stepped Lenses

Drawing references are shown for convenience in checking shipping lists and invoices.

Fig. No.	Name	Drawing Reference
	Order by plate, figure number and name	
	Order must specify the following:	
	1—Voltage upon which signal is to operate if d-c. or frequency and both line and local voltages if a-c.....	
	2—See Plate H2629 for various methods of bringing wires into signal and specify fittings required.....	
	3—If plug coupler is required same must be specified.....	
	4—Whether 20 degree deflection is required to right or to left, facing signal.....	53051-6
B1	as above, except equipped with a 30 degree outer spredlite roundel, which gives a spread of 15 degrees on each side of the beam axis or a total spread of 30 degrees. (This combination materially reduces the range of the signal and is used on severe curves only).....	53051-6
E	Type SA Color-Light Signal Unit Complete, for mounting on top of 5″ dia. pipe, three indication, equipped with an 8⅜″ dia., 5″ focus, hot-spot lens.....	
	Order must specify the following:	
	1—Voltage upon which signal is to operate if d-c. or frequency and both line and local voltages if a-c.....	
	2—If plug coupler is required same must be specified.....	53051-6
F	Type SA Color-Light Signal Unit Complete, for mounting on top of 5″ pipe, three indication, equipped with an 8⅜″ dia., 5″ focus, hot-spot lens, and an 8⅜″ dia., 20 degree deflecting roundel. This lens combination is arranged to spread the main beam through an angle of 20 degrees to one side of the beam axis.....	
	Order must specify the following:	
	1—Voltage upon which signal is to operate if d-c. or frequency and both line and local voltages if a-c.....	

(*Continued on following page*)

January 1941 GENERAL RAILWAY SIGNAL COMPANY

Type SA Color-Light Signal Unit

With Stepped Lenses

Drawing references are shown for convenience in checking shipping lists and invoices.

Fig. No.	Name	Drawing Reference
	Order by plate, figure number and name	
	2—If plug coupler is required same must be specified.....	
	3—Whether 20 degree deflection is required to right or to left, facing signal.....	53051–6
F1	as above, except equipped with a 30 degree outer spredlite roundel, which gives a spread of 15 degrees on each side of the beam axis or a total spread of 30 degrees. (This combination materially reduces the range of the signal and is used on severe curves only).....	53051–6
G	Type SA Color-Light Signal Unit Complete, for mounting on wall of tunnel or subway, equipped with a 6⅜″ dia., 3¾″ focus, lens.	
	Order must specify the following:	
	1—Voltage upon which signal is to operate if d-c. or frequency and both line and local voltages if a-c.....	
	2—If plug coupler is required same must be specified.....	
	3—See Plate H2629 for various methods of bringing wires into signal and specify fittings required.....	53051–6
H	D-c. Mechanism Complete, for details and order references see Plates H2649 to H2655.....	
H1	as above, except a-c. mechanism, for details and order references see Plate H2663.....	
J	Socket Complete, for mounting signal unit to top of 5″ dia. pipe (5⁹⁄₁₆″ outside dia.).....	54732 Gr. 2
K	Slide Complete, for mechanism, includes studs for attaching to case	56421 Gr. 6
1	Case, housing for mechanism having slide arrangement Fig. K, includes studs for cams of mechanism.....	53071–16 441–122
1a	as above, except for mechanism without slide arrangement Fig. K, includes stud for hasp and studs for cams of mechanism.....	53071 441–121 441–122
2	Hair-Line Sight Complete.....	51120–2 Gr. 1

(Continued on following page)

PLATE H2631

Type SA Color-Light Signal Unit

With Stepped Lenses

Drawing references are shown for convenience in checking shipping lists and invoices.

Fig. No.	Name	Drawing Reference
	Order by plate, figure number and name	
3	Nut 3/8"–16 x 3/8" th., hex., for fastening sight and slide Fig. K to case	1156–2
4	Washer, 1/16" th., for nut Fig. 3	19867–2
5	Spacer, as shown, for background	53112
6	Background, as shown, for use with 8 3/8" dia. lens	49162–25
6a	as above, except for use with 10 1/2" diameter lens	49162–24
7	Screw, 3/8"–16 x 1 1/4" hex. hd., with lock washer, for fastening background to case	2472–12 0569
8	Inner Ring, for 8 3/8" diameter lens	43983–34
9	Screw, 5/16"–18 x 3/4" rd. hd., with lock washer, for fastening inner ring to case and outer ring to inner ring	33287–6 0623–1
10	Outer Ring, for 8 3/8" diameter lens	43983–35
11	Hood, as shown, for use with 8 3/8" diameter lens	49127–19
11a	as above, except for use with 10 1/2" diameter lens	49127–20
12	Screw, No. 10–32 x 1/4" rd. hd., for fastening hood to case	2438–9
13	Lens, hot-spot, 8 3/8" dia., 5" focus	36733–7
14	Gasket, for 8 3/8" diameter lens	13014–57
14a	as above, except for 6 3/8" dia. lens Fig. 52	13014–56
15	Lock Latch, as shown, threaded 1/2"–13 for hasp nut, for case having slide arrangement Fig. K	53106–2
15a	as above, except 1/2"–13 thread, for case without slide arrangement, Fig. K	53106–1
15b	same as Fig. 15a, except with 1/2"–24 thread	53106
16	Hasp, as shown includes nut, with 1/2"–13 thread, for case having slide arrangement Fig. K	9524 9525–6 7568
16a	as above, except has nut with 1/2"–24 thread, for case without slide arrangement Fig. K	9524 9525 7568

(*Continued on following page*)

Type SA Color-Light Signal Unit

With Stepped Lenses

Drawing references are shown for convenience in checking shipping lists and invoices.

Fig. No.	Name	Drawing Reference
	Order by plate, figure number and name	
17	Door Complete, for case with slide arrangement Fig. K, includes gasket, latch, hasp and all riveted parts	53057 Gr. 3
17a	as above, except for case without slide arrangement Fig. K, includes gasket, latch, hasp and all riveted parts	53057 Gr. 1
18	Pin, $\frac{3}{8}''$ x $1\frac{13}{16}''$, with cotter, hinge for door	730–33 0663
19	Pin, $\frac{7}{16}''$ x $1\frac{9}{16}''$, with cotter, as shown, for fastening case to bracket	730–21 0663
21	Taper Pin, No. 2 x $1\frac{1}{2}''$, for fastening stud, Fig. 33 to bracket Fig. 25	46463
22	Taper Pin, No. 2 x $1\frac{1}{4}''$, for fastening stud, Fig. 23 to mechanism case	28349
23	Stud, as shown, used for obtaining vertical adjustment of signal unit	980–10
24	Nut, $\frac{3}{4}''$–10 hex., for studs, Figs. 23 and 33	0272–1
25	Bracket, for supporting signal unit	53092–1
26	Bracket, as shown, for attaching to 4″, 5″, or 6″ dia. pipe. Includes screw, Fig. 31 and nut Fig. 32	53249–2 Gr. 1
26a	as above, except 23″ lg., for use when signal unit is mounted in front of pipe	53249–3 Gr. 1
27	U Bolt, for mounting bracket to 5″ pipe. Includes nuts and washers	16209–4 Gr. 1
28	U Bolt, for mounting bracket to 4″ pipe. Includes nuts and washers	16209–5 Gr. 1
29	U Bolt, for mounting bracket to 6″ pipe. Includes nuts and washers	16209–6 Gr. 1
30	Nut, $\frac{5}{8}''$–11 hex., for U bolt	645
31	Screw, $\frac{1}{2}''$–13 x $1\frac{1}{2}''$ cup point, for locking stud, Fig. 33, after horizontal adjustment of signal has been made	40426

(Continued on following page)

GENERAL RAILWAY SIGNAL COMPANY January 1941

Type SA Color-Light Signal Unit

With Stepped Lenses

Drawing references are shown for convenience in checking shipping lists and invoices.

Fig. No.	Name	Drawing Reference
	Order by plate, figure number and name	
32	Nut, ½″–13 hex., lock for screw, Fig. 31	1048
33	Stud, as shown, for obtaining horizontal adjustment of signal	980–42
34	Adapter, as shown, for use in applying deflecting roundel to 8⅜″ dia. lens. For Figs. B and B1	43983–46
35	Screw, 5/16″–18 x 1¾″ rd. hd., with lock washer, for fastening outer ring and adapter to inner ring. For use with Figs. B and B1	33287–13 0623–1
36	Deflecting Roundel, 8⅜″ dia., for use with Fig. B. Deflects part of main beam through an angle of 20 degrees to one side of the beam axis. For use on curved track	9238–38
37	Spredlite Roundel, 8⅜″ dia., for use with Fig. B1. Spreads the main beam 15 degrees to each side of the beam axis or a total spread of 30 degrees. For use only on "S" curves or severe curves in one direction	53142–1
38	Inner Ring, as shown, for use with 10½″ dia. lens	43983–32
39	Outer Ring, as shown, for use with 10½″ dia. lens	43983–33
40	Lens, 10½″ dia., 6″ focus, half-toric. Gives a 20 degree downward spread for close-up indication	53118
40a	as above, except 10½″ dia., 6″ focus, spredlite half-toric, spreads the main beam 6 degrees to each side of the beam axis or a total spread of 12 degrees. Also gives a 20 degree downward spread for close-up indication	53118–1
41	Gasket, for 10½″ dia. lens	13014–58
44	Nut, ¾″–10 hex., for studs Figs. 23 and 33	646–3
45	Nut, 1½″ T & B, for nipple Fig. 47	0827
46	Shield, for bottom of signal case	54733
47	Nipple, 1½″, for bottom of signal case	47915–2
48	Socket, only, for 5″ pipe	11660–5

(*Continued on following page*)

January 1941 GENERAL RAILWAY SIGNAL COMPANY

Type SA Color-Light Signal Unit

With Stepped Lenses

Drawing references are shown for convenience in checking shipping lists and invoices.

Fig. No.	Name	Drawing Reference
	Order by plate, figure number and name	
49	Bolt, ½″–13 x 3½″ sq. hd., with hex. nuts, for fastening clamp to socket	53137 7244–1 26747
50	Clamp, only, for 5″ pipe, with stud for locking in pipe	317–28 Gr. 2
51	Lens, 6⅜″ dia., 3¾″ focus, for signal Fig. G	53119
52	Outer Ring, for 6⅜″ diameter lens	43983–30
53	Bracket, for attaching signal unit to wall	53249–4 Gr. 1
54	Bolt, ⅝″–11 x 5″ sq. hd., for attaching bracket Fig. 53 to wall	0366

PLATE H2633

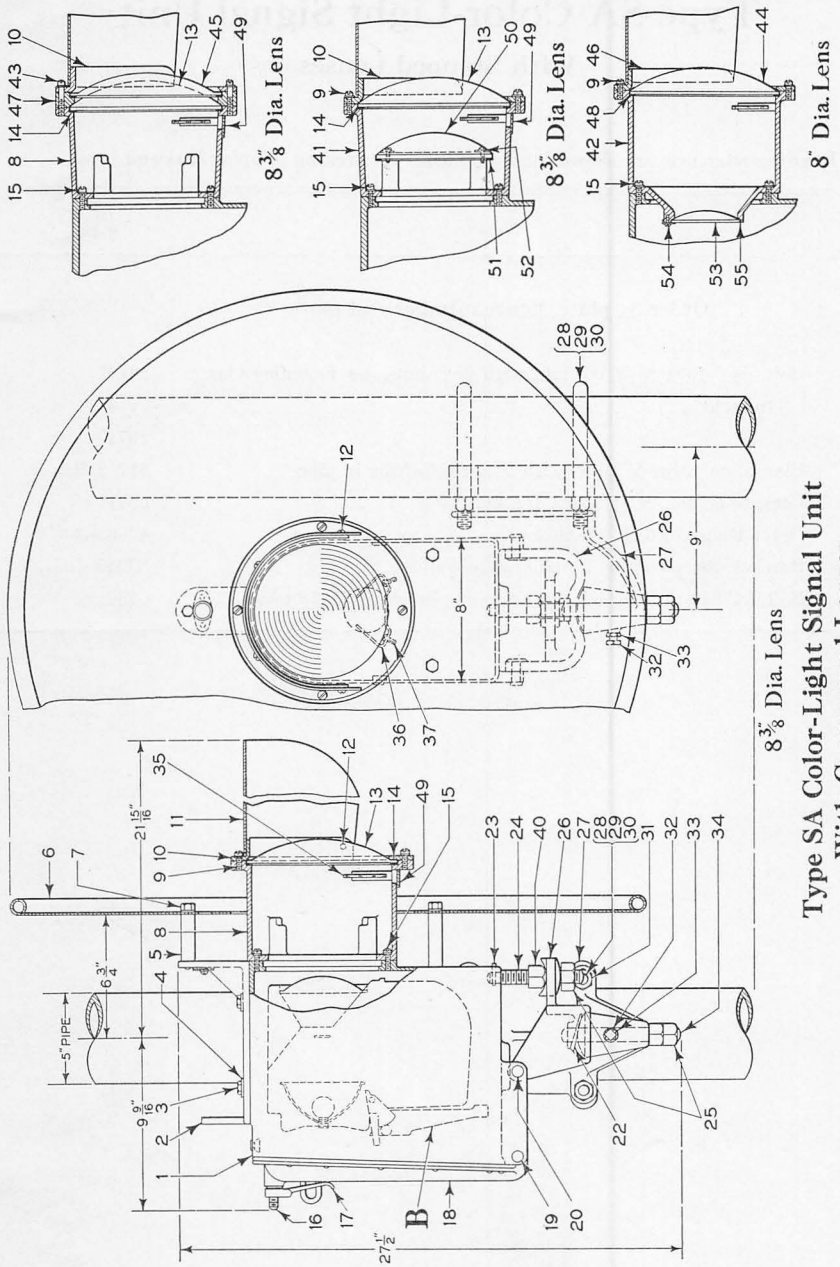

Type SA Color-Light Signal Unit
With Compound Lenses
For Repair Parts Only

January 1941 GENERAL RAILWAY SIGNAL COMPANY

Type SA Color-Light Signal Unit

With Compound Lenses

Note: This plate is included for ordering repair parts only for the original type of signal with compound lenses.

When ordering new signals complete see Plate H2635.

Drawing references are shown for convenience in checking shipping lists and invoices.

Fig. No.	Name	Drawing Reference
	Order by plate, figure number and name	
B	Mechanism Complete, for details and order references see Plates H2643 to H2647	
1	Case, housing for mechanism, includes stud for hasp and studs for cams of mechanism	53071 441–121 441–122
2	Hair-Line Sight Complete	51120–2 Gr. 1
3	Screw, 3/8″–16 x 3/4″ hex. hd., for fastening sight to case	21931–3
4	Washer, 1/16″ th. for screw Fig. 3	19867–2
5	Spacer, as shown 2 1/2″ lg., for background	53112–2
5a	as above, except 3/4″ lg.	53112
6	Background, as shown, for signal	49162–25
7	Screw, 3/8″–16 x 3″ lg., hex. hd., for fastening background to case	2472–17
7a	as above, except 1 1/4″ lg. for use with spacer Fig. 5a for fastening background to case	2472–12
8	Adapter, as shown, for use with 8 3/8″ dia. lens	54243–1
9	Screw, 5/16″–18 x 3/4″, fil. hd., with lock washer, for fastening outer ring to adapter	16398–4 0623–1
10	Outer Ring, as shown, for use with 8 3/8″ dia. lens	43983–35
11	Hood, for signal	49127–19
12	Screw, No. 10–32 x 1/4″ rd. hd., for fastening hood to adapter	2438–9
13	Lens, 8 3/8″ dia., 11 1/2″ focus	54249–2
14	Gasket, for use between 8 3/8″ dia. lens and adapter	13014–57
15	Screw, 5/16″–18 x 1″ fil. hd., with lock washer, for fastening adapter to case	16398–2 0623–1
16	Lock Latch, as shown, threaded 1/2″–24 for hasp nut	53106
16a	as above, except threaded 1/2″–13	53106–1

(Continued on following page)

GENERAL RAILWAY SIGNAL COMPANY January 1941

Type SA Color-Light Signal Unit

With Compound Lenses

Drawing references are shown for convenience in checking shipping lists and invoices.

Fig. No.	Name	Drawing Reference
	Order by plate, figure number and name	
17	Hasp, as shown includes nut, threaded 1/2″–24	9524 9525 7568
17a	as above, except threaded 1/2″–13	9524 9525–6 7568
18	Door Complete, for case, includes gasket, latch, hasp and all riveted parts	53057 Gr. 1
19	Pin, 3/8″ x 1 13/16″ with cotter, hinge for door	730–33 0663
20	Pin, 7/16″ x 1 9/16″, with cotter, as shown, for fastening case to bracket	730–21 0663
22	Taper Pin, No. 2 x 1 1/2″, for fastening stud Fig. 34 to bracket Fig. 27	46463
23	Taper Pin, No. 2 x 1 1/4″, for fastening stud Fig. 24 to signal case.	28349
24	Stud, as shown, for obtaining vertical adjustment of signal unit	980–10
25	Nut, 3/4″–10 hex., for studs Figs. 24 and 34	0272–1
26	Bracket, for supporting signal unit	53092–1
27	Bracket Complete, as shown, for attaching to 4″, 5″, or 6″ dia. pipe. Includes screw Fig. 32 and nut. Fig. 33	53249–2 Gr. 1
27a	as above, except 23″ lg., for use when signal unit is mounted in front of pipe	53249–3 Gr. 1
28	U Bolt, for mounting bracket to 5″ pipe. Includes nuts and washers	16209–4 Gr. 1
29	U Bolt, for mounting bracket to 4″ pipe. Includes nuts and washers	16209–5 Gr. 1
30	U Bolt, for mounting bracket to 6″ pipe. Includes nuts and washers	16209–6 Gr. 1
31	Nut, 5/8″–11 hex., for U bolt	645

(Continued on following page)

Type SA Color-Light Signal Unit

With Compound Lenses

Drawing references are shown for convenience in checking shipping lists and invoices.

Fig. No.	Name	Drawing Reference
	Order by plate, figure number and name	
32	Screw, ½″–13 x 1½″ cup pt., for locking stud Fig. 34 after horizontal adjustment of signal has been made	40426
33	Nut, ½″–13 hex., lock for screw Fig. 32	1048
34	Stud, as shown, for obtaining horizontal adjustment of signal	980–11
35	Glass, with deflecting prisms	54264
36	Holder, for glass Fig. 35	54248–1
37	Screw, No. 8–32 x ¼″ rd. hd., for fastening holder Fig. 36 to adapter	2553–11
40	Nut, ¾″–10 hex., for studs Figs. 24 and 34	646–3
41	Adapter, as shown, for use with 8⅜″ dia. outer lens and 6⅜″ dia. inner lens	54243–2
42	Adapter, as shown, for use with 8″ dia. lens	54243
43	Screw, 5/16″–18 x 1½″ fil. hd. with lock washer, for fastening rings Figs. 10 and 47 to adapter	53116–1 0623–1
44	Lens, 8″ dia., 13″ focus, for use with lens Fig. 53	54249–1
45	Deflecting Roundel, 8⅜″ dia., deflects part of main beam through an angle of 20 degrees to one side of the beam axis. For use on curved track	9238–38
46	Outer Ring, as shown, for use with 8″ dia. lens	43983–54
47	Ring, as shown, for 8⅜″ dia. lens	43983–46
48	Gasket, for use between 8″ dia. lens and adapter	13014–89
49	Cover, for adapter	55030
50	Spredlite Roundel, 6⅜″ dia., 25 degree spredlite also deflects part of main beam downward through an angle of 25 degrees	9238–65
51	Gasket, for roundel Fig. 50	13014–47
52	Screw, No. 8–32 x ⅜″ rd. hd. with clip and washer, for fastening roundel, Fig. 50, to adapter	2553–11 18547–15 43058–1
53	Lens, 4″ dia., 6½″ focus, for use with lens Fig. 44	54249

(Continued on following page)

PLATE H2633

Type SA Color-Light Signal Unit

With Compound Lenses

Drawing references are shown for convenience in checking shipping lists and invoices.

Fig. No.	Name	Drawing Reference
	Order by plate, figure number and name	
54	Screw, No. 8-32 x ½″ rd. hd., with lock washer and clip, for fastening lens Fig. 53 to adapter	2553-15 43058-1 18547-25
55	Gasket, for lens Fig. 53	52983-2

Memoranda

PLATE H2635

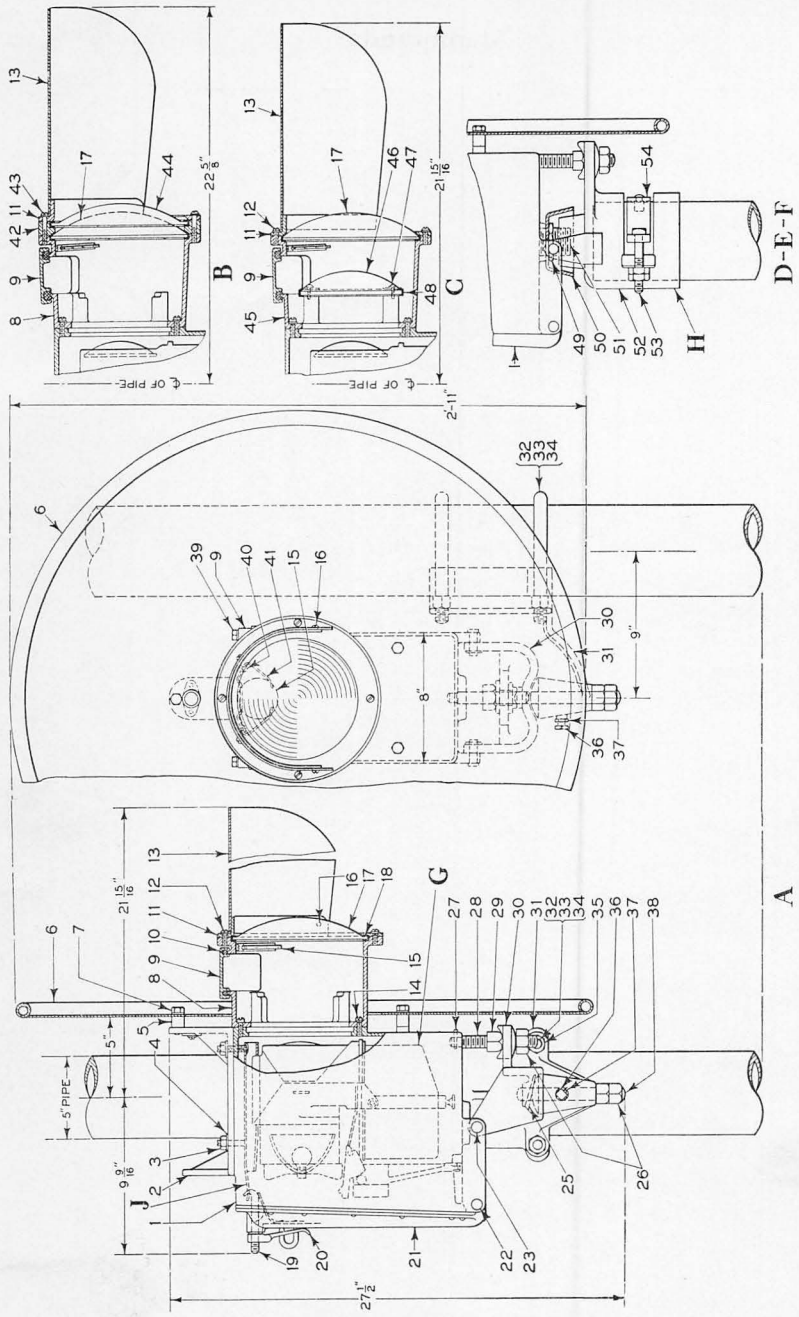

Type SA Color-Light Signal Unit
With Compound Lenses

January 1941 GENERAL RAILWAY SIGNAL COMPANY

Type SA Color-Light Signal Unit

With Compound Lenses

Note: See foreword and ordering information at the beginning of this part.

Unless otherwise specified, signal units will be furnished to give three indications, namely: red, yellow and green. If two indication signal unit is required, same must be specified giving color of indications.

Other color combinations may be supplied if required.

Signals are designed to operate on the following voltages: 4, 7.5–8, 10 and 12 volts d-c., however they may be equipped with an a-c. mechanism to operate on voltages and frequencies as listed on Plate H2663.

Signal units will be furnished for mounting to 5″ pipe (5 9/16″ outside dia.) unless otherwise specified.

Lamps, conduit and conduit couplings are not included and must be ordered separately.

Signal units are assembled with roundel Fig. 15, having deflecting prisms, having its secondary beam deflected downward and to the left, facing the lens, at an angle of 30 degrees from the vertical. This lens may be rotated to change this angle as conditions require, and can be adjusted on signals, with or without deflecting or spredlite roundels.

Drawing references are shown for convenience in checking shipping lists and invoices.

Fig. No.	Name	Drawing Reference
	Order by plate, figure number and name	
A	Type SA Color-Light Signal Unit Complete, for mounting to 5″ pipe, three indication, equipped with an 8 3/8″ dia. compound lens.....	
	Order must specify the following:	
	1—Voltage upon which signal is to operate if d-c. or frequency and both line and local voltages if a-c.....	
	2—See Plate H2629 for various methods of bringing wires into signal and specify fittings required.....	
	3—If plug coupler is required same must be specified.....	53051–7
B	Type SA Color-Light Signal Unit Complete, for mounting to 5″ pipe, three indication, equipped with an 8 3/8″ dia. compound lens and an 8 3/8″ dia. outer 20 degree deflecting roundel. This lens combination is arranged to spread the main beam through an angle of 20 degrees to one side of the beam axis.....	

(Continued on following page)

GENERAL RAILWAY SIGNAL COMPANY January 1941

Type SA Color-Light Signal Unit

With Compound Lenses

Drawing references are shown for convenience in checking shipping lists and invoices.

Fig. No.	Name	Drawing Reference
	Order by plate, figure number and name	
	Order must specify the following:	
	1—Voltage upon which signal is to operate if d-c. or frequency and both line and local voltages if a-c.....	
	2—See Plate H2629 for various methods of bringing wires into signal and specify fittings required.....	
	3—If plug coupler is required, same must be specified.....	
	4—Whether 20 degree deflection is required to right or to left, facing signal.....	53051-7
B1	as above, except equipped with a 30 degree outer spredlite roundel, which gives a spread of 15 degrees on each side of the beam axis or a total spread of 30 degrees. (This combination materially reduces the range of the signal and is used on severe curves only).....	53051-7
C	Type SA Color-Light Signal Unit Complete, for mounting to 5″ pipe, three indication, equipped with a 25 degree 6⅜″ dia. inner spredlite roundel and an 8⅜″ dia. compound lens.....	
	Order must specify the following:	
	1—Voltage upon which signal is to operate if d-c. or frequency and both line and local voltages if a-c.....	
	2—See Plate H2629 for various methods of bringing wires into signal and specify fittings required.....	
	3—If plug coupler is required, same must be specified.....	53051-7
D	Type SA Color-Light Signal Unit Complete, for mounting on top of 5″ pipe, three indication, equipped with an 8⅜″ dia. compound lens.....	
	Order must specify the following:	
	1—Voltage upon which signal is to operate if d-c. or frequency and both line and local voltages if a-c.....	
	2—If plug coupler is required same must be specified.....	53051-7

(Continued on following page)

January 1941 GENERAL RAILWAY SIGNAL COMPANY

Type SA Color-Light Signal Unit

With Compound Lenses

Drawing references are shown for convenience in checking shipping lists and invoices.

Fig. No.	Name	Drawing Reference
	Order by plate, figure number and name	
E	Type SA Color-Light Signal Unit Complete, for mounting on top of 5″ pipe, three indication, equipped with an 8⅜″ dia. compound lens and an 8⅜″ dia. outer 20 degree deflecting roundel. This lens combination is arranged to spread the main beam through an angle of 20 degrees to one side of the beam axis....	
	Order must specify the following:	
	1—Voltage upon which signal is to operate if d-c. or frequency and both line and local voltages if a-c.....	
	2—If plug coupler is required same must be specified.....	
	3—Whether 20 degree deflection is required, to right or to left, facing signal.....	53051–7
E1	as above, except equipped with a 30 degree outer spredlite roundel, which gives a spread of 15 degrees on each side of the beam axis or a total spread of 30 degrees. (This combination materially reduces the range of the signal and is used on severe curves only).....	53051–7
F	Type SA Color-Light Signal Unit Complete, for mounting on top of 5″ pipe, three indication, equipped with a 25 degree 6⅜″ dia. inner spredlite roundel and an 8⅜″ dia. compound lens..	
	Order must specify the following:	
	1—Voltage upon which signal is to operate if d-c. or frequency and both line and local voltages if a-c.....	
	2—If plug coupler is required same must be specified.....	53051–7
G	D-c. Mechanism Complete, for details and order references see Plates H2649 to H2655.....	
G1	as above, except a-c. mechanism, for details and order references see Plate H2663.....	
H	Socket Complete, for mounting signal unit to top of 5″ dia. pipe (5$^{9}/_{16}$″ outside dia.).....	54732 Gr. 2

(*Continued on following page*)

GENERAL RAILWAY SIGNAL COMPANY January 1941

Type SA Color-Light Signal Unit

With Compound Lenses

Drawing references are shown for convenience in checking shipping lists and invoices.

Fig. No.	Name	Drawing Reference
	Order by plate, figure number and name	
J	Slide Complete, for mechanism, includes studs for attaching to case	56421 Gr. 6
1	Case, housing for mechanism having slide arrangement Fig. J, includes studs for cams of mechanism	53071-16 441-122
1a	as above, except for mechanism without slide arrangement Fig. J, includes studs for hasp and studs for cams of mechanism	53071 441-121 441-122
2	Hair-Line Sight Complete	51120-2 Gr. 1
3	Nut, 3/8"-16 x 3/8" th. hex., for fastening sight and slide Fig. J to case	1156-2
4	Washer, 1/16" th., for screw Fig. 3	19867-2
5	Spacer, as shown, for background	53112
6	Background, as shown, for signal	49162-25
7	Screw, 3/8"-16 x 1 1/4" hex. hd., for fastening background to case	2472-12
8	Adapter, as shown, for signals Figs. A, B, D, and E	54243-3
9	Cover, for hand hole	49584-6
10	Gasket, for cover Fig. 9	43460
11	Outer Ring, as shown, for signals	43983-35
12	Screw, 5/16"-18 x 3/4" rd. hd., with lock washer, for fastening outer ring to adapter, for signals Figs. A, C, D, and F	33287-6 0623-1
13	Hood, as shown, for signals	49127-19
14	Screw, 5/16"-18 x 3/4" fil. hd., with lock washer, for fastening adapter to case	16398-4 0623-1
15	Roundel, with deflecting prisms	54264
16	Screw, No. 10-32 x 1/4" rd. hd., for fastening hood to adapter	2438-9
17	Lens, 8 3/8" dia., 11 1/2" focus	54249-2
18	Gasket, for lens and roundel	13014-57
19	Lock Latch, as shown, threaded 1/2"-13, for hasp nut, for case having slide arrangement Fig. J	53106-2

(*Continued on following page*)

Type SA Color-Light Signal Unit

With Compound Lenses

Drawing references are shown for convenience in checking shipping lists and invoices.

Fig. No.	Name	Drawing Reference
	Order by plate, figure number and name	
19a	as above, except ½″–13 thread, for case without slide arrangement Fig. J	53106–1
19b	same as Fig. 19a, except ½″–24 thread	53106
20	Hasp, as shown, includes nut, with ½″–13 thread, for case having slide arrangement Fig. J	9524 9525–6 7568
20a	as above, except has nut with ½″–24, thread, for case without slide arrangement Fig. J	9524 9525 7568
21	Door Complete, for case with slide arrangement Fig. J, includes gasket, latch, hasp and all riveted parts	53057 Gr. 3
21a	as above, except for case without slide arrangement Fig. J, includes gasket, latch, hasp and all riveted parts	53057 Gr. 1
22	Pin, ⅜″ x 1 13/16″ with cotter, hinge for door	630–33 0663
23	Pin, 7/16″ x 1 9/16″, with cotter, as shown, for fastening case to bracket	730–21 0663
25	Taper Pin, No. 2 x 1½″, for fastening stud Fig. 38 to bracket Fig. 31	46463
26	Nut ¾″–10 hex., for studs Figs. 28 and 38	0272–1
27	Taper Pin, No. 2 x 1¼″, for fastening stud Fig. 28 to signal case	28349
28	Stud, as shown, for obtaining vertical adjustment of signal unit	980–10
29	Nut, ¾″–10 hex., for studs Figs. 28 and 38	646–3
30	Bracket, for supporting signal unit	53092–1
31	Bracket Complete, as shown, for attaching to 4″, 5″, or 6″ dia. pipe. Includes screw Fig. 36, and nut Fig. 37	53249–2 Gr. 1
31a	as above, except 23″ lg., for use when signal unit is mounted in front of pipe	53249–3 Gr. 1

(Continued on following page)

GENERAL RAILWAY SIGNAL COMPANY January 1941

Type SA Color-Light Signal Unit

With Compound Lenses

Drawing references are shown for convenience in checking shipping lists and invoices.

Fig. No.	Name	Drawing Reference
	Order by plate, figure number and name	
32	U Bolt, for mounting bracket to 5″ pipe. Includes nuts and washers	16209–4 Gr. 1
33	U Bolt, for mounting bracket to 4″ pipe. Includes nuts and washers	16209–5 Gr. 1
34	U Bolt, for mounting bracket to 6″ pipe. Includes nuts and washers	16209–6 Gr. 1
35	Nut, 5/8″–11 hex., for U bolt	645
36	Screw, 1/2″–13 x 1 1/2″ cup point, for locking stud Fig. 38 after horizontal adjustment of signal has been made	40426
37	Nut, 1/2″–13 hex., lock for screw Fig. 36	1048
38	Stud, as shown, for obtaining horizontal adjustment of signal	980–42
39	Screw, 3/8″–16 x 1 1/4″ hex. hd., with washer, for fastening cover to adapter	2472–12 0569
40	Screw, No. 8–32 x 1/4″ rd. hd., for fastening holder Fig. 41 to adapter	2553–7 43058–1
41	Holder, for glass Fig. 15	54248–1
42	Ring, as shown, for signals Figs. B and E	43983–46
43	Screw, 5/16″–18 x 1 1/2″ rd. hd., with lock washer, for fastening rings Figs. 11 and 42 to adapter	33287–8 0623–1
44	Deflecting Roundel, 8 3/8″ dia., for signals Figs. B and E, deflects part of main beam through an angle of 20 degrees to one side of the beam axis. For use on curved track	9238–38
44a	as above, except spredlite roundel 8 3/8″ dia. spreads the main beam 15 degrees to each side of the beam axis or a total spread of 30 degrees. For use only on "S" curves or severe curves in one direction	53142–1
45	Adapter, for signals Figs. C and F	54243–4
46	Spredlite Roundel 6 3/8″ dia., for signals Figs. C and F, 25 degree spredlite. Also deflects part of main beam downward through an angle of 25 degrees	9238–65

(Continued on following page)

January 1941 GENERAL RAILWAY SIGNAL COMPANY

Type SA Color-Light Signal Unit

With Compound Lenses

Drawing references are shown for convenience in checking shipping lists and invoices.

Fig. No.	Name	Drawing Reference
	Order by plate, figure number and name	
47	Screw, No. 8-32 x 3/8" rd. hd., with clip and washer, for fastening roundel Fig. 46 to adapter	2553-11 18547-15 43058-1
48	Gasket, for roundel Fig. 47	13014-47
49	Nut, 1½" T & B, for nipple Fig. 51	0827
50	Shield, for bottom of signal case	54733
51	Nipple, 1½", for bottom of signal case	47915-2
52	Socket, only, for 5" pipe	11660-5
53	Bolt, ½"-13 x 3½" sq. hd. with hex. nuts, for fastening clamp to socket	53137 7244-1 26747
54	Clamp only, with stud for locking in pipe, for 5" pipe	317-28 Gr. 2

PLATE H2639

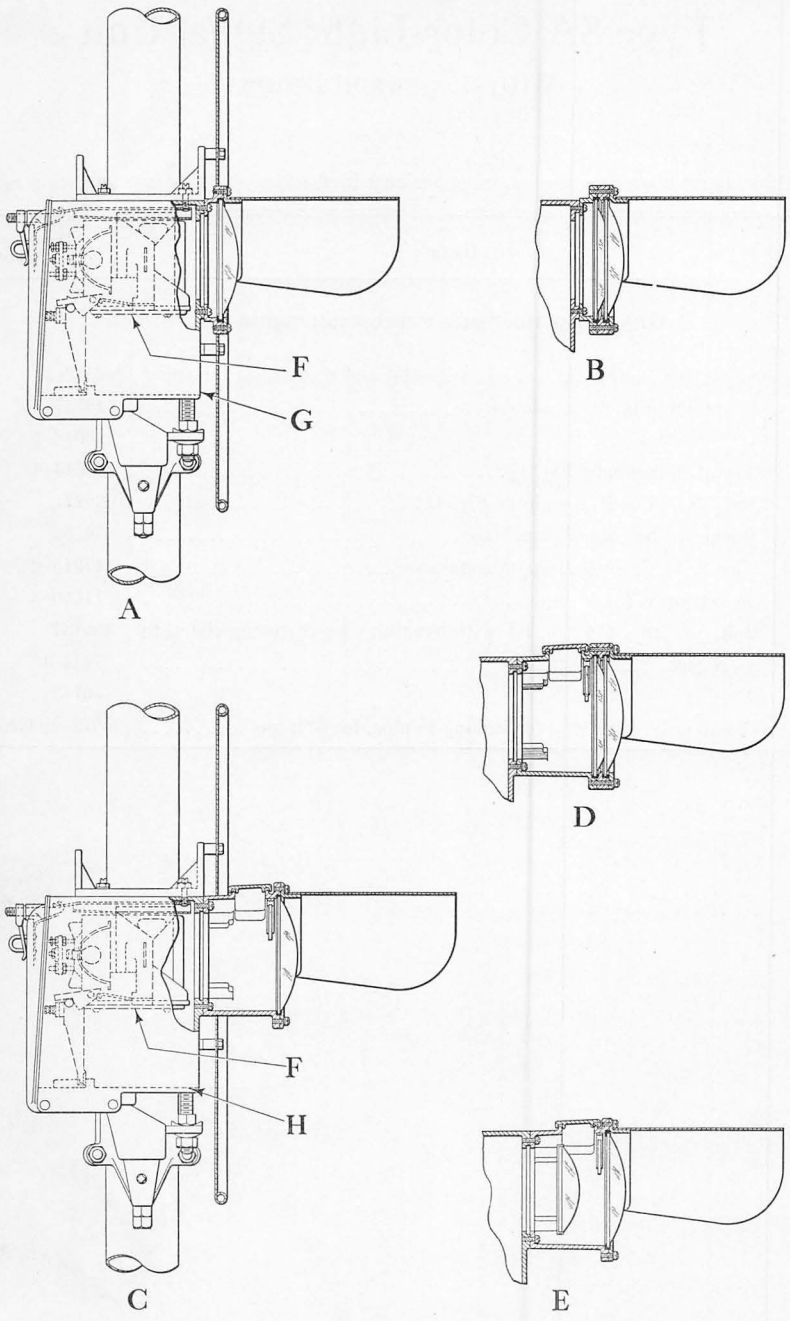

Type SA Marker Lights and Fixed Arms

January 1941 GENERAL RAILWAY SIGNAL COMPANY

Type SA Marker Lights and Fixed Arms

Note: See foreword and ordering information at the beginning of this part.

Unless otherwise specified, signal units will be furnished to give red indication only.

Other color combinations may be supplied if required.

Signal units will be furnished for mounting to 5″ pipe (5 9/16″ outside dia.) unless otherwise specified.

Lamps, conduit and conduit couplings are not included and must be ordered separately.

For Type W Marker Lights and Fixed Arms, see Section H, Part 32.

Drawing references are shown for convenience in checking shipping lists and invoices.

Fig. No.	Name	Drawing Reference
	Order by plate, figure number and name	
A	Type SA Marker Light Complete, for mounting to 5″ dia. pipe, with one indication inoperative unit, signal is equipped with 8 3/8″ dia., 5″ focus hot-spot stepped lens same as shown on Plate H2631, Fig. A.	
	Order must specify the following:	
	1—See Plate H2629 and specify method of bringing wires into signal and fittings required.	
	2—Whether or not background is required.	
B	Type SA Marker Light Complete, for mounting to 5″ dia. pipe, with one indication inoperative unit, signal is equipped with 8 3/8″ dia., 5″ focus hot-spot stepped lens and an 8 3/8″ dia. 20 degree deflecting roundel same as shown on Plate H2631, Fig. B. This lens combination is arranged to spread the main beam through an angle of 20 degrees to one side of the beam axis.	
	Order must specify the following:	
	1—See Plate H2629 and specify the method of bringing wires into signal and fittings required.	
	2—Whether 20 degree deflection is required to right or left, facing signal.	
	3—Whether or not background is required.	

(Continued on following page)

GENERAL RAILWAY SIGNAL COMPANY January 1941

Type SA Marker Lights and Fixed Arms

Drawing references are shown for convenience in checking shipping lists and invoices.

Fig. No.	Name	Drawing Reference
	Order by plate, figure number and name	
B1	as above, except equipped with a 30 degree outer spredlite roundel, which gives a spread of 15 degrees on each side of the beam axis or a total spread of 30 degrees. (This combination materially reduces the range of the signal and is used on severe curves only).....	
C	Type SA Marker Light Complete, for mounting to 5″ dia. pipe with one indication inoperative unit, signal is equipped with 8⅜″ dia. compound lens same as shown on Plate H2635, Fig. A	
	Order must specify the following:	
	1—See Plate H2629 and specify method of bringing wires into signal and fittings required.....	
	2—Whether or not background is required.....	
D	Type SA Marker Light Complete, for mounting to 5″ pipe, with one indication inoperative unit, signal is equipped with 8⅜″ dia. compound lens and an 8⅜″ dia. outer 20 degree deflecting roundel same as shown on Plate H2635, Fig. B.....	
	Order must specify the following:	
	1—See Plate H2629 and specify method of bringing wires into signal and fittings required.....	
	2—Whether 20 degree deflection is required to right or to left, facing signal.....	
	3—Whether or not background is required.....	
D1	as above, except equipped with a 30 degree outer spredlite roundel, which gives a spread of 15 degrees on each side of the beam axis or a total spread of 30 degrees. (This combination materially reduces the range of the signal and is used on severe curves only).....	
E	Type SA Marker Light Complete, for mounting to 5″ pipe, with one indication inoperative unit, signal is equipped with 25 degree 6⅜″ dia. inner spredlite roundel and an 8⅜″ dia. compound lens same as shown on Plate H2635 Fig. C.....	

(Continued on following page)

January 1941 GENERAL RAILWAY SIGNAL COMPANY

Type SA Marker Lights and Fixed Arms

Drawing references are shown for convenience in checking shipping lists and invoices.

Fig. No.	Name	Drawing Reference
	Order by plate, figure number and name	
	Order must specify the following:	
	1—See Plate H2629 and specify method of bringing wires into signal and fittings required.....	
	2—Whether or not background is required.....	
F	Mechanism Complete, inoperative. For details and order references see Plate H2669.....	
G	Case Complete, for stepped lens units, for details and order references see Plate H2631.....	
H	Case Complete, for compound lens units, for details and order references see Plate H2635.....	

PLATE H2641

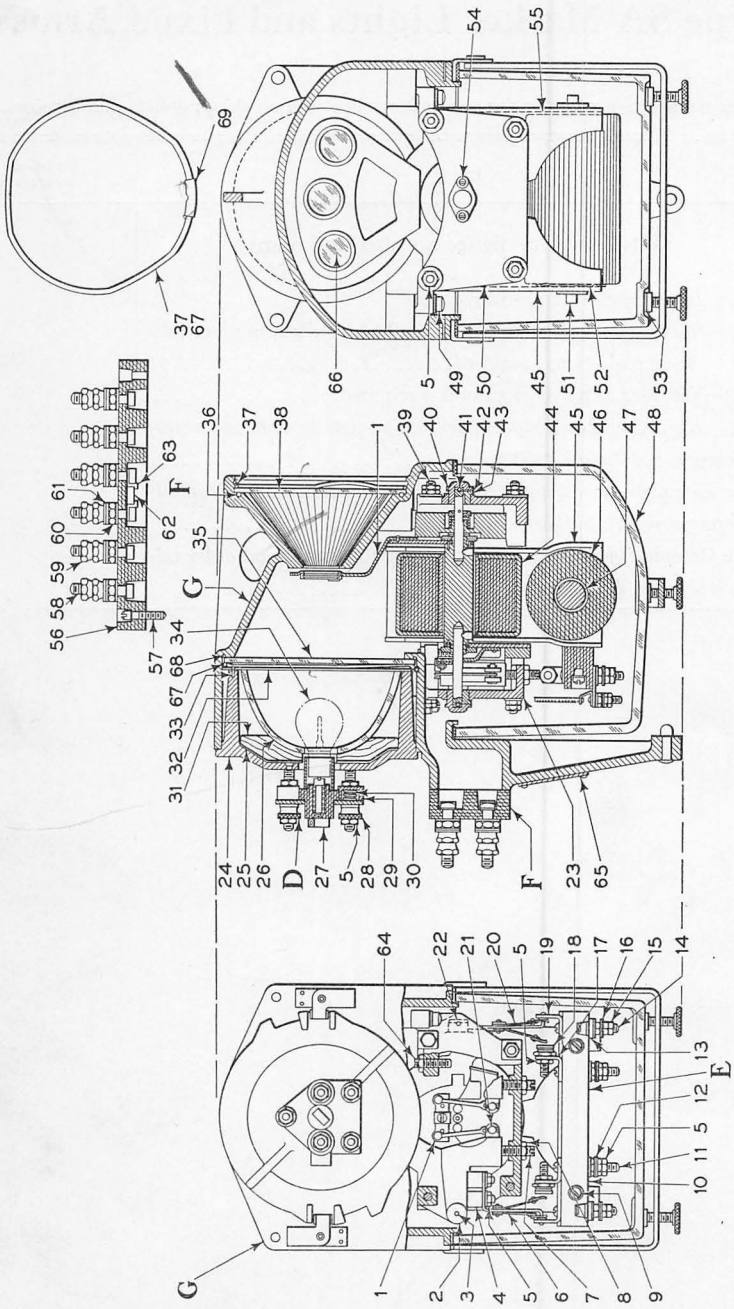

Type SA Direct-Current Signal Mechanism
For Repair Parts Only

January 1941 GENERAL RAILWAY SIGNAL COMPANY

Type SA Direct-Current Signal Mechanism

For Repair Parts Only

Note: This plate is included for ordering repair parts only for mechanism, drawing No. 53052–4.

For latest direct-current mechanisms see Plates H2649 to H2653.

Drawing references are shown for convenience in checking shipping lists and invoices.

Fig. No.	Name	Drawing Reference
	Order by plate, figure number and name	
D	Reflector Unit Complete, comprises parts Figs. 24 to 33 inclusive. Does not include lamp Fig. 34 which must be ordered separately	53056 Gr. 3
E	Contact Block Complete, as shown. Comprises parts Figs. 9 to 19 inclusive	53053 Gr. 3 12563–9
F	Terminal Block Complete, as shown. Comprises parts Figs. 56 to 63 inclusive	53060 Gr. 3 12563–5
G	Case Complete, includes all parts for housing mechanism. Does not include reflector unit, terminal board, glass Fig. 38 and glass case Fig. 48	
1	Armature Complete, with miniature roundels, for three indication unit, giving green, red and yellow indications. Includes spectacles, vane and all parts mounted on shaft	53055–4 Gr. 1
1a	as above, except for two indication unit, giving red and yellow indications	53055–4 Gr. 3
1b	same as Fig. 1, except for two indication unit, giving green and red indications	53055–4 Gr. 4
1c	same as Fig. 1, except for two indication unit, giving purple and yellow indications	53055–4 Gr. 2
2	Counterweight, for mechanism	53703 Gr. 1
3	Pin, 1/8″ x 1¼″, hinge for counterweight	504–140
4	Insulator Complete, for contact fingers. Includes stud for attaching to counterweight	42792
5	Nut, No. 10–32 x 3/8″ hex., with lock washer, for stud on insulators, also for contacts, terminal posts and studs for supporting brackets	40796 22543–9

(*Continued on following page*)

GENERAL RAILWAY SIGNAL COMPANY January 1941

Type SA Direct-Current Signal Mechanism

For Repair Parts Only

Drawing references are shown for convenience in checking shipping lists and invoices.

Fig. No.	Name	Drawing Reference
	Order by plate, figure number and name	
6	Contact Finger Complete, left hand, as shown, one required	53059 Gr. 4
7	Screw, No. 14–40 x 5/8″ headless, used as stops for counterweights. Two required	5100–10
8	Nut, No. 14–40 hex., for screws Figs. 7 and 64	53084–1
9	Screw, No. 10–32 x 7/8″ fil. hd., for fastening contact block to pole piece	12563–9
10	Contact Block only, for Fig. E	47508–45
11	Screw, No. 10–32 x 1½″ rd. hd., terminal post for contact block	2438–24
12	Washer, for terminal post, Fig. 11	40791
13	Insulator, for terminal post on contact block	53109
14	Screw, No. 8–32 x ¾″ rd. hd., used as terminal post	2553–19
15	Nut, No. 8–32 hex., for terminal post, Fig. 14	3891–1
16	Washer, for terminal post, Fig. 14	2534–1
17	Terminal, for front contact	51559–11
18	Front Contact Complete, as shown, two required	42799–7 Gr. 8
19	Back Contact Complete, as shown, two required	13061–52 Gr. 1
20	Contact Finger Complete, right hand, as shown, one required	53059 Gr. 3
21	Pin, as shown, with cotter, for fastening links on armature to counterweight	730–46 51026–2
22	Pin, 1/16″ x 9/16″, for fastening counterweight hinge pin in bracket Fig. 23	12682
23	Bearing Bracket, as shown, for supporting one end of armature shaft and counterweight	53063–2
24	Holder, for reflector unit Fig. D, includes studs for mounting receptacle	53068–1 441–120
25	Washer, for use between pad and holder for reflector	590–25
26	Reflector, glass, as shown	53122

(Continued on following page)

Type SA Direct-Current Signal Mechanism

For Repair Parts Only

Drawing references are shown for convenience in checking shipping lists and invoices.

Fig. No.	Name	Drawing Reference
	Order by plate, figure number and name	
27	Lamp Receptacle Complete, for details and order references see Plate H2669	53058–5 Gr. 2
28	Knurled Nut, No. 10–32, for lamp receptacle	13076–1
29	Nut, No. 10–32 hex., cup shape for spring	20673–2
30	Spring, as shown, for receptacle	586–32
31	Pad, for use behind reflector	1533–32
32	Retaining Ring, for reflector	45647–5
33	Screw, No. 4–36 x 3/16″ rd. hd., for fastening retaining ring to holder	35699–2
34	Incandescent Lamp, 2 pin candelabra single contact bayonet base, S-8 bulb, single filament, 1000 hour rating, 11.3 volts, 13.3 watts, recommended for operation on 10 volts	34866–32
34a	as above, except S-11 bulb, single filament, 1000 hour rating, 8 volts, 10 watts, recommended for operation on 7.2 volts	34866–43
34b	same as Fig. 34, except S-11 bulb, major and minor filaments in multiple, 1000 hour rating, 8 volts, 13+3.5 watts, recommended for operation on 7.2 volts	34866–37
34c	same as Fig. 34, except S-11 bulb, single filament, 1000 hour rating, 9 volts, 15.3 watts, recommended for operation on 8 volts	34866–34
34d	same as Fig. 34, except S-11 bulb, major and minor filaments in multiple, 1000 hour rating, 10 volts, 13+3.5 watts, recommended for operation on 9 volts	34866–60
34e	same as Fig. 34, except S-11 bulb, single filament, 1000 hour rating, 10 volts, 25 watts, recommended for operation on 9 volts	34866–47
34f	same as Fig. 34, except S-11 bulb, single filament, 2000 hour rating, 13.5 volts, 17 watts recommended for operation on 12 volts	34866–25
34g	same as Fig. 34, except G-16½ bulb, single filament, 1000 hour rating, 115 volts, 25 watts, recommended for operation on 110 volts	34866–45

(Continued on following page)

GENERAL RAILWAY SIGNAL COMPANY January 1941

Type SA Direct-Current Signal Mechanism

For Repair Parts Only

Drawing references are shown for convenience in checking shipping lists and invoices.

Fig. No.	Name	Drawing Reference
	Order by plate, figure number and name	
35	Glass, for reflector unit compartment	924–11
36	Gasket, rubber, for use with lens, Fig. 38	52983–3
37	Spring, with sleeve, for fastening glass in case	51107–6 15284–17
38	Outer Cover Glass, for use in position shown	924–17
39	Stud, as shown, for mounting bracket, four required	441–117
40	Bearing, upper half, for armature shaft	53828
41	Ball, for use at ends of armature shaft	36126–4
42	Shim, .005″ th. for use between upper and lower halves of armature shaft bearing	53879
42a	as above, except .003″ th	53879–1
43	Bearing, lower half, with knife edge for armature shaft	53828–1
44	Line Coil, 250 ohms resistance, for 8 volt operation. Includes bakelite shell	53121 Gr. 2
44a	as above, except 380 ohms resistance for 10 volt operation	53121 Gr. 3
44b	same as Fig. 44, except 500 ohms resistance, for 12 volt operation. (Also replacement for 430 ohm coil)	53121 Gr. 5
45	Pole Piece Complete. Two required	53101 Gr. 1
46	Local Coil, 300 ohms resistance, for 8 volt operation	31066–18 Gr. 2
46a	as above, except 517 ohms resistance, for 10 volts operation	31066–18 Gr. 4
46b	same as Fig. 46, except 650 ohms resistance, for 12 volt operation	31066–18 Gr. 5
47	Core, for coil	53075
48	Glass Cover, for housing lower half of mechanism	37380–8
49	Screw, 1/4″–20 x 7/8″ fil. hd., for fastening bearing brackets to case	45572–4
50	Bearing Bracket, for supporting end of armature shaft	53064–1
51	Plug, 3/8″–16, for expanding core to fasten to pole piece	53226
52	Washer, as shown, for coil	36177–2
53	Washer, leather, for use between glass cover and stirrup on case Fig. G	4553

(*Continued on following page*)

January 1941 GENERAL RAILWAY SIGNAL COMPANY

Type SA Direct-Current Signal Mechanism

For Repair Parts Only

Drawing references are shown for convenience in checking shipping lists and invoices.

Fig. No.	Name	Drawing Reference
	Order by plate, figure number and name	
54	Screw, No. 8–32 x 13/32″, collar hd., for fastening bearing to bracket	53829–2
55	Washer, fibre, for local coil	34017–5
56	Block only, for terminal block, Fig. F	47508–27
57	Screw, No. 10–32 x 3/4″, fil. hd., for mounting terminal block, Fig. F	12563–5
58	Screw, No. 14–24 x 1 1/2″ sq. hd., used as terminal post	350–3
59	Nut, No. 14–24 x 5/16″ hex., for terminal post	42843–1
60	Nut, No. 14–24 x 3/16″ hex., for terminal post	42839–1
61	Washer, for terminal post	1225–2
62	Carborundum Plate, used as lightning protection between terminals of control windings	41786–2
63	Connector, for carborundum plate, Fig. 62	4906–40
64	Screw, No. 14–40 x 7/8″ headless, used as stop for vane and counterweight	5100–6
65	Name Plate, with escutcheon pins, for mechanism	401–90 40797
66	Color Disc Complete, red, A. A. R. Standard, assembled in retaining cup	53073 Gr. 2
66a	as above, except yellow with one side depolished, A.A.R. Standard	53073 Gr. 12
66b	same as Fig. 66, except green, pre-cracked, A.A.R. Standard	53073 Gr. 3
66c	same as Fig. 66, except purple, A.A.R. Standard	53073 Gr. 7
67	Spring, with sleeve, for fastening glass Fig. 35 in case	51107–3 15284–17
68	Gasket, rubber, for use between glass and case	52983–1
69	Sleeve, for springs, Figs. 37 and 67	15284–17

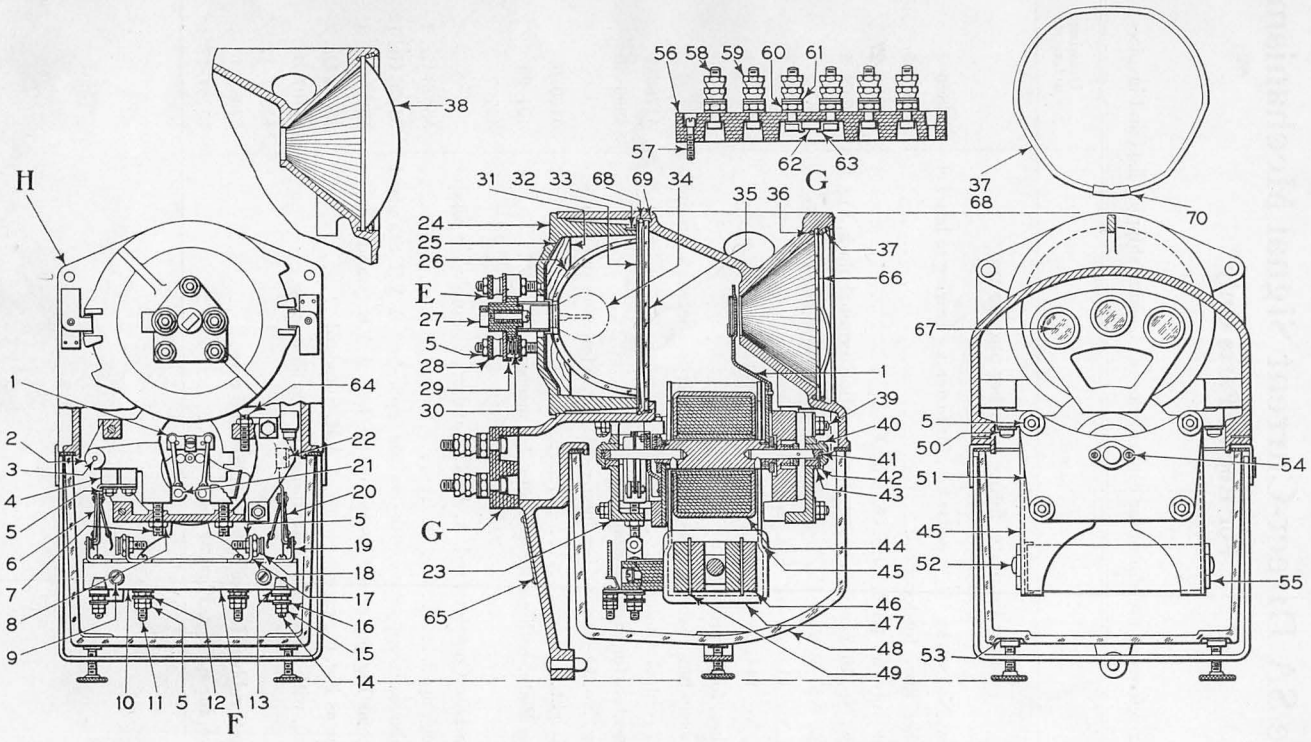

Type SA Direct-Current Signal Mechanism
With Stepped or Compound Lenses
For Repair Parts Only

January 1941 GENERAL RAILWAY SIGNAL COMPANY

Type SA Direct-Current Signal Mechanism

With Stepped or Compound Lenses
For Repair Parts Only

Note: This plate is included for ordering repair parts only for mechanisms, drawing Nos. 53052–8 and 53052–9.

For latest direct-current mechanism see Plates H2649 to H2655.

Drawing references are shown for convenience in checking shipping lists and invoices.

Fig. No.	Name	Drawing Reference
	Order by plate, figure number and name	
E	Reflector Unit Complete, comprises parts Figs. 24 to 33 inclusive. Does not include lamp Fig. 34 which must be ordered separately	53056 Gr. 3
F	Contact Block Complete, as shown. Comprises parts Figs. 9 to 19 inclusive	53053 Gr. 3 12563–9
G	Terminal Block Complete, as shown. Comprises parts Figs. 56 to 63 inclusive	53060 Gr. 4 12563–5
H	Case Complete, includes all parts for housing mechanism. Does not include reflector unit, terminal board, glass Fig. 66 or glass case Fig. 48	53270 Gr. 1
1	Armature Complete, with miniature roundels, for three indication unit, giving green, red and yellow indications. Includes spectacles, vane and all parts mounted on shaft	53055–4 Gr. 1
1a	as above, except for two indication unit giving red and yellow indications	53055–4 Gr. 3
1b	same as Fig. 1, except for two indication unit giving green and red indications	53055–4 Gr. 4
1c	same as Fig. 1, except for two indication unit, giving purple and red indications	53055–4 Gr. 2
2	Counterweight, for mechanism	53703 Gr. 1
3	Pin, ⅛″ x 1¼″, hinge for counterweight	504–140
4	Insulator Complete, for contact fingers. Includes stud for attaching to counterweights	42792

(Continued on following page)

GENERAL RAILWAY SIGNAL COMPANY January 1941

Type SA Direct-Current Signal Mechanism

With Stepped or Compound Lenses
For Repair Parts Only

Drawing references are shown for convenience in checking shipping lists and invoices.

Fig. No.	Name	Drawing Reference
	Order by plate, figure number and name	
5	Nut, No. 10–32 x 3/8" hex., for stud on insulators, also for contacts, terminal posts and studs for supporting brackets	40796
6	Contact Finger Complete, left hand, as shown, one required	53059 Gr. 4
7	Screw, No. 14–40 x 5/8", headless, used as stops for counterweight. Two required	5100–10
8	Nut, No. 14–40 hex., for screws, Figs. 7 and 64	53084–1
9	Screw, No. 10–32 x 7/8" fil. hd., for fastening contact block to pole piece	12563–9
10	Contact Block, only, for Fig. F	47508–45
11	Screw, No. 10–32 x 1½" rd. hd., terminal post for contact block	2438–24
12	Washer, for terminal post Fig. 11	40791
13	Insulator, for terminal post on contact block	53109
14	Screw, No. 8–32 x 3/4", rd. hd., used as terminal post	2553–9
15	Nut, No. 8–32, hex., for terminal post, Fig. 14	3891–1
16	Washer, for terminal post, Fig. 14	2534–1
17	Terminal, for front contact	51559–11
18	Front Contact Complete, as shown, two required	42799–7 Gr. 8
19	Back Contact Complete, as shown, two required	13061–52 Gr. 1
20	Contact Finger Complete, right hand, as shown, one required	53059 Gr. 3
21	Pin, as shown, with cotter, for fastening links on armature to counterweight	730–46 51026–2
22	Pin, 1/16" x 9/16", for fastening counterweight hinge pin in bracket, Fig. 23	12682
23	Bearing Bracket, as shown, for supporting one end of armature shaft and counterweight	53063–2
24	Holder, for reflector unit, Fig. E, includes studs for mounting receptacle	53068–1 441–120
25	Washer, for use between pad and holder for reflector	590–25
26	Reflector, glass, as shown	53122

(Continued on following page)

January 1941 GENERAL RAILWAY SIGNAL COMPANY

Type SA Direct-Current Signal Mechanism

With Stepped or Compound Lenses
For Repair Parts Only

Drawing references are shown for convenience in checking shipping lists and invoices.

Fig. No.	Name	Drawing Reference
	Order by plate, figure number and name	
27	Lamp Receptacle Complete, for details and order references see Plate H2669	53058-5 Gr. 2
28	Knurled Nut, No. 10-32, for lamp receptacle	13076-1
29	Nut, No. 10-32 hex., cup shape for spring	20673-2
30	Spring, as shown, for receptacle	586-32
31	Pad, for use behind reflector	1533-32
32	Retaining Ring, for reflector	45647-5
33	Screw, No. 4-36 x 3/16" rd. hd., for fastening retaining ring to holder	35699-1
34	Incandescent lamp 2 pin candelabra single contact bayonet base, S-8 bulb, single filament, 1000 hour rating, 11.3 volts, 13.3 watts, recommended for operation on 10 volts	34866-32
34a	as above, except S-11 bulb, single filament, 1000 hour rating, 8 volts, 10 watts, recommended for operation on 7.2 volts	34866-43
34b	same as Fig. 34, except S-11 bulb, major and minor filaments in multiple, 1000 hour rating, 8 volts, 13+3.5 watts, recommended for operation on 7.2 volts	34866-37
34c	same as Fig. 34, except S-11 bulb, single filament, 1000 hour rating, 9 volts, 15.3 watts recommended for operation on 8 volts	34866-34
34d	same as Fig. 34, except S-11 bulb, major and minor filaments in multiple, 1000 hour rating, 10 volts, 13+3.5 watts, recommended for operation on 9 volts	34866-60
34e	same as Fig. 34, except S-11 bulb, single filament, 1000 hour rating, 10 volts, 25 watts, recommended for operation on 9 volts	34866-47
34f	same as Fig. 34, except S-11 bulb, single filament, 2000 hour rating, 13.5 volts, 17 watts recommended for operation on 12 volts	34866-25
34g	same as Fig. 34, except G-16½ bulb, single filament, 1000 hour rating, 115 volts, 25 watts, recommended for operation on 110 volts	34866-45

(Continued on following page)

GENERAL RAILWAY SIGNAL COMPANY January 1941

Type SA Direct-Current Signal Mechanism

With Stepped or Compound Lenses
For Repair Parts Only

Drawing references are shown for convenience in checking shipping lists and invoices.

Fig. No.	Name	Drawing Reference
	Order by plate, figure number and name	
34h	same as Fig. 34, except S-11 bulb, single filament, 1000 hour rating, 4 volts, 3 watts, recommended for compound lens signal only, for operation on 4 volts	34866–35
34j	same as Fig. 34, except S-11 bulb, single filament, 1000 hour rating, 8 volts, 5 watts, recommended for compound lens signals only, for operation on 8 volts	34866–55
34k	same as Fig. 34, except S-11 bulb, major and minor filaments in multiple, 1000 hour rating, 8 volts, 5+3.5 watts, recommended for compound lens signals only, for operation on 8 volts	34866–58
34m	same as Fig. 34, except S-11 bulb, single filament, 1000 hour rating, 10 volts, 5 watts, recommended for compound lens signal only, for operation on 10 volts	34866–38
35	Glass, for reflector unit compartment	924–11
36	Gasket, rubber, for use with lens, Fig. 38 and glass Fig. 66	52983–3
37	Spring, with sleeve, for fastening lens in case	51107–6 15284–17
38	Lens, 4½″ dia., 6½″ focus, for use with signal units employing compound lens	54249–3
39	Stud, as shown, for mounting bearing brackets, four required	441–117
40	Bearing, upper half, for armature shaft	53828
41	Ball, for use at ends of armature shaft	36126–4
42	Shim, .005″ th., for use between upper and lower halves of armature shaft bearings	53879
42a	as above, except .003″ th	53879–1
43	Bearing, lower half, with knife-edge for armature shaft	53828–1
44	Line Coil, 120 ohms resistance, for 4 volt operation. Includes bakelite shell	53121 Gr. 6

(Continued on following page)

Type SA Direct-Current Signal Mechanism

With Stepped or Compound Lenses
For Repair Parts Only

Drawing references are shown for convenience in checking shipping lists and invoices.

Fig. No.	Name	Drawing Reference
	Order by plate, figure number and name	
44a	as above, except 250 ohms resistance, for 8 volt operation	53121 Gr. 2
44b	same as Fig. 44, except 380 ohms resistance, for 10 volt operation	53121 Gr. 3
44c	same as Fig. 44, except 500 ohms resistance for 12 volt operation. (Also replacement for 430 ohm coil)	53121 Gr. 5
45	Pole Piece Complete. Two required	53101 Gr. 1
46	Magnet Complete. (Includes 4-46a, 2-47, 4-49)	54419 Gr. 1
46a	Magnet only, for use with compound lens signal mechanism	54245
47	Support, for magnet Fig. 46	54420
48	Glass Cover, for housing lower half of mechanism	37380-8
49	Spacer, as shown, for magnet	54421
50	Screw, 1/4"-20 x 7/8" fil. hd., for fastening bearing brackets to case	45572-4
51	Bearing Bracket, for supporting end of armature shaft	53064-1
52	Stud, for supporting magnets	879-31
53	Washer, leather, for use between glass cover and stirrup on case, Fig. H	4553
54	Screw, No. 8-32 x 13/32" collar hd., for fastening bearing to bracket	53829-2
55	Nut, 7/16"-14, for stud, Fig. 52	54247
56	Block only, for terminal block, Fig. G	47508-27
57	Screw, No. 10-32 x 3/4" fil. hd., for mounting terminal block Fig. G	12563-5
58	Screw, No. 14-24 x 1 1/2" sq. hd., used as terminal post	350-3
59	Nut, No. 14-24 x 5/16" hex., for terminal post	42843-1
60	Nut, No. 14-24 x 3/16" hex., for terminal post	42839-1
61	Washer, for terminal post	1225-2
62	Carborundum Plate, used as lightning protection between terminals of control windings	41786-2
63	Connector, for carborundum plate Fig. 62	4906-40
64	Screw, No. 14-40 x 7/8" headless, used as stop for vane and counter-weight	5100-6

(Continued on following page)

PLATE H2643

GENERAL RAILWAY SIGNAL COMPANY January 1941

Type SA Direct-Current Signal Mechanism

With Stepped or Compound Lenses
For Repair Parts Only

Drawing references are shown for convenience in checking shipping lists and invoices.

Fig. No.	Name	Drawing Reference
	Order by plate, figure number and name	
65	Name Plate, with escutcheon pins, for mechanism	401–150 40797
66	Outer Cover Glass, for use with stepped lens signals	924–17
67	Color Disc Complete, red, A.A.R. Standard, assembled in retaining cup	53073 Gr. 2
67a	as above, except yellow with one side depolished, A.A.R. Standard	53073 Gr. 12
67b	same as Fig. 67, except green, pre-cracked, A.A.R. Standard	53073 Gr. 3
67c	same as Fig. 67, except purple, A.A.R. Standard	53073 Gr. 7
68	Spring, with sleeve, for fastening glass Fig. 35 in case	51107–3 15284–17
69	Gasket, rubber, for use between glass and case	52983–1
70	Sleeve, for springs Figs. 37 and 68	15284–17

File with Catalog
Plate H 2644

CHANGE NOTIFICATION SHEET

T Y P E S A S E A R C H L I G H T S I G N A L S

Change in Adjustable Lamp Resistor

Effective immediately, the adjustable lamp resistor, although a part of the SA signal mechanism, will be furnished on new mechanisms as a plug-in unit and must be ordered separately from signal mechanism. When ordering, be sure to give drawing number.

Plug-in resistors will not fit older mechanisms.

The table below gives ratings available.

Resistance Values	Maximum Current	Drawing Number
1 ohm	2.5 amps.	55945-10 Gr. 1
2 ohm	1.75 amps.	55945-10 Gr. 2
5 ohm	1.0 amps.	55945-10 Gr. 3
10 ohm	0.8 amps.	55945-10 Gr. 4

Memoranda

PLATE H2645

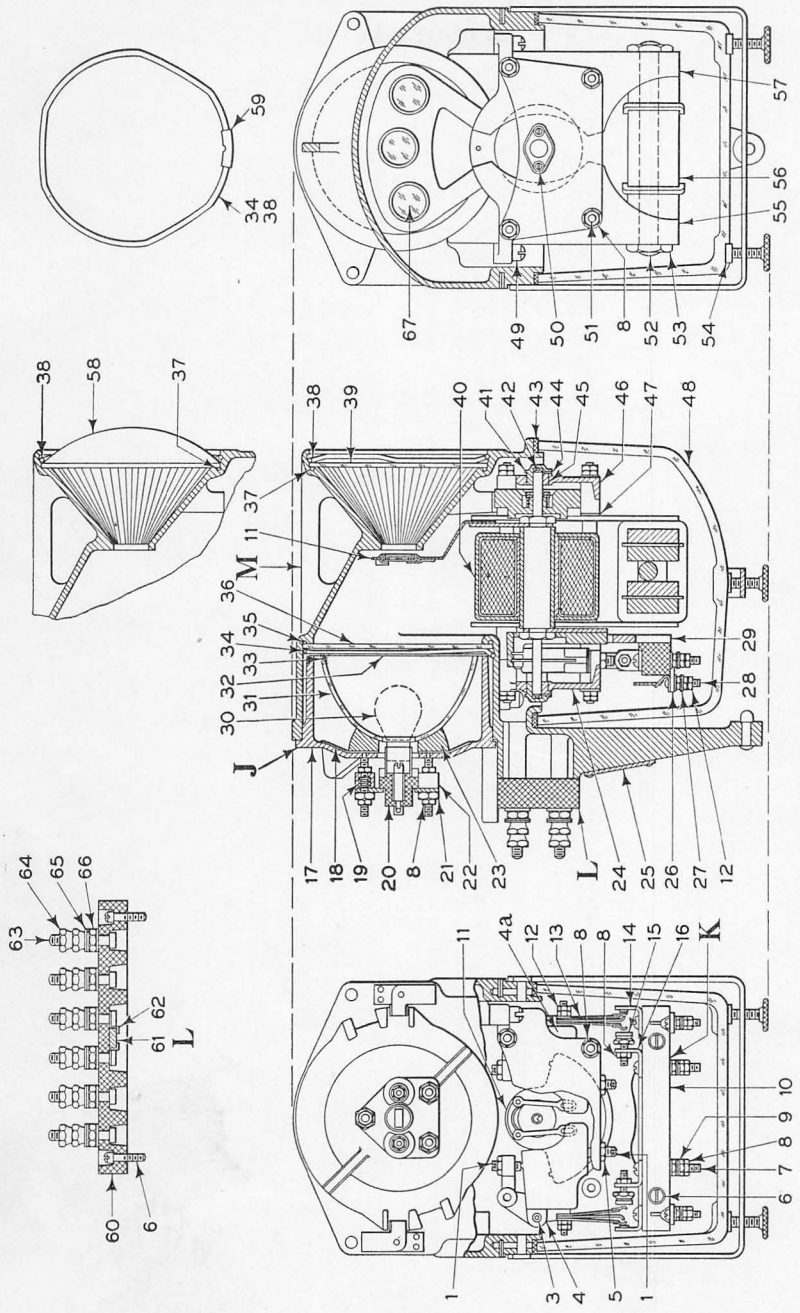

Type SA Direct-Current Signal Mechanism
For Repair Parts Only

January 1941 GENERAL RAILWAY SIGNAL COMPANY

Type SA Direct-Current Signal Mechanism

With Stepped or Compound Lenses
For Repair Parts Only

Note: This plate is included for ordering repair parts only for mechanisms, drawing Nos. 53052–11 and 53052–12.

For latest direct-current mechanisms see Plates H2649 to H2655.

Drawing references are shown for convenience in checking shipping lists and invoices.

Fig. No.	Name	Drawing Reference
	Order by plate, figure number and name	
J	Reflector Unit Complete, comprises parts Fig. 8, 17 to 23, and 30 to 33 inclusive. Does not include lamp Fig. 30, which must be ordered separately	53056–1 Gr. 1
K	Contact Block Complete, as shown. Comprises parts Figs. 7, 8, 9, 10, 12, 14, 15, 16, 26, 27 and 28	53053 Gr. 8
L	Terminal Block Complete, as shown. Comprises parts Figs. 6 and 60 to 66 inclusive	53060 Gr. 4
M	Case Complete, includes all parts for housing mechanism. Does not include reflector unit, terminal block, glass Fig. 39 or glass case Fig. 48	53270–1 Gr. 1
1	Screw, No. 14–40 x 5/8″ lg. headless, used as stop for counterweight	5100–10
3	Pin, .125″ dia. x 7/8″ lg. for counterweight	2644–5
4	Counterweight Complete, left hand, for mechanism	53703–1 Gr. 3
4a	as above, except right hand	53703–1 Gr. 4
5	Nut, No. 14–40 x 1/8″ hex. for screws Fig. 1	53084–1
6	Screw, No. 10–32 x 3/4″, fil. hd., for fastening contact block to bracket	12563–5
7	Screw, No. 10–32 x 1 1/2″ rd. hd., terminal post for contact block	2438–24
8	Nut, No. 10–32 x 1/8″ hex., for terminal posts and contacts, also for stud Fig. 51	40796
9	Washer, for terminal posts	40791
10	Terminal Block, only	47508–49
11	Armature Complete, with miniature roundels, for three indication unit, giving green, red and yellow indications. Includes spectacles, fly wheel, vane and all riveted parts mounted on shaft	53055–7 Gr. 1

(Continued on following page)

GENERAL RAILWAY SIGNAL COMPANY January 1941

Type SA Direct-Current Signal Mechanism

With Stepped or Compound Lenses
For Repair Parts Only

Drawing references are shown for convenience in checking shipping lists and invoices.

Fig. No.	Name	Drawing Reference
	Order by plate, figure number and name	
11a	as above, except for two indication unit giving purple and yellow indications	53055-7 Gr. 2
11b	same as Fig. 11, except for two indication unit giving red and yellow indication	53055-7 Gr. 3
12	Nut, No. 8-32 x 1/8" hex., for fastening fingers to counterweight, also for terminal posts Fig. 28	3891-1
13	Contact Finger Complete, as shown, two required	53059-3 Gr. 1
14	Back Contact Complete, includes silver contact, as shown, two required	13061-52 Gr. 1
15	Contact Complete, as shown, two required	42799-7 Gr. 8
16	Terminal, for contact Fig. 15	51559-11
17	Holder, for reflector unit Fig. J, includes studs for mounting receptacle riveted in place	53068-2 441-120
18	Washer, for use between pad and holder for reflector	590-25
19	Spring, for receptacle	586-32
20	Lamp Receptacle Complete, for details and order references see Plate H2669	53058-5 Gr. 2
21	Nut, No. 10-32 hex., for stud on holder	46277-1
22	Nut, No. 10-32, cup shape, for spring	20673-2
23	Washer, for use behind reflector	1533-32
24	Bearing Bracket, as shown, for supporting one end of armature shaft	53063-6
25	Name Plate, with screws, for mechanism	401-223 54392-13
26	Insulation, for contact block	53109
27	Washer, for screw Fig. 28	2534-1
28	Screw, No. 8-32 x 3/4" rd. hd., used as terminal post on contact block	2553-19

(Continued on following page)

Type SA Direct-Current Signal Mechanism

With Stepped or Compound Lenses
For Repair Parts Only

Drawing references are shown for convenience in checking shipping lists and invoices.

Fig. No.	Name	Drawing Reference
	Order by plate, figure number and name	
29	Bracket, as shown, for supporting counterweights and contact block	53063-7
30	Incandescent Lamp, 2 pin candelabra single contact bayonet base, S-8 bulb, single filament, 1000 hour rating, 11.3 volts, 13.3 watts, recommended for operation on 10 volts	34866-32
30a	as above, except S-11 bulb, single filament, 1000 hour rating, 8 volts, 10 watts, recommended for operation on 7.2 volts	34866-43
30b	same as Fig. 30, except S-11 bulb, major and minor filaments in multiple, 1000 hour rating, 8 volts, 13+3.5 watts, recommended for operation on 7.2 volts	34866-37
30c	same as Fig. 30, except S-11 bulb, single filament, 1000 hour rating, 9 volts, 15.3 watts, recommended for operation on 8 volts	34866-34
30d	same as Fig. 30, except S-11 bulb, major and minor filaments in multiple, 1000 hour rating, 10 volts, 13+3.5 watts, recommended for operation on 9 volts	34866-60
30e	same as Fig. 30, except S-11 bulb, single filament, 1000 hour rating, 10 volts, 25 watts, recommended for operation on 9 volts	34866-47
30f	same as Fig. 30, except S-11 bulb, single filament, 2000 hour rating, 13.5 volts, 17 watts, recommended for operation on 12 volts	34866-25
30g	same as Fig. 30, except G-16½ bulb, single filament, 1000 hour rating, 115 volts, 25 watts, recommended for operation on 110 volts	34866-45
30h	same as Fig. 30, except S-11 bulb, single filament, 1000 hour rating, 4 volts, 3 watts, recommended for compound lens signal only, for operation on 4 volts	34866-35
30j	same as Fig. 30, except S-11 bulb, single filament, 1000 hour rating, 8 volts, 5 watts, recommended for compound lens signals only, for operation on 8 volts	34866-55

(Continued on following page)

GENERAL RAILWAY SIGNAL COMPANY January 1941

Type SA Direct-Current Signal Mechanism

With Stepped or Compound Lenses
For Repair Parts Only

Drawing references are shown for convenience in checking shipping lists and invoices.

Fig. No.	Name	Drawing Reference
	Order by plate, figure number and name	
30k	same as Fig. 30, except S-11 bulb, major and minor filaments in multiple, 1000 hour rating, 8 volts, 5+3.5 watts, recommended for compound lens signals only, for operation on 8 volts	34866–58
30m	same as Fig. 30, except S-11 bulb, single filament, 1000 hour rating, 10 volts, 5 watts, recommended for compound lens signal only, for operation on 10 volts	34866–38
31	Reflector, glass, as shown	53122
32	Retaining Ring, for reflector	45647–5
33	Screw, No. 4–36 x ¼″ fl. hd., for fastening retainer to holder	35699–2
34	Spring, with sleeve, for fastening glass Fig. 36 in case	51107–3 15284–17
35	Gasket, rubber, for use between glass and case	52983–1
36	Glass, for reflector unit compartment	924–11
37	Gasket, rubber, for use with glass Fig. 39 or lens Fig. 58	52983–3
38	Spring, with sleeve, for fastening glass in case	51107–6 15284–17
39	Outer Cover Glass, for use in position shown	924–17
40	Line Coil, 105 ohms resistance, for 4 volt operation. Includes bakelite shell	53121 Gr. 6
40a	as above, except 250 ohms resistance for 7.5–8 volt operation	53121 Gr. 2
40b	same as Fig. 40 except 380 ohms resistance, for 10–12 volt operation	53121 Gr. 5
41	Bearing, upper half, for armature shaft	53828
42	Ball, for use at ends of armature shaft	36126–4
43	Gasket, for use between glass case and mechanism case	13014–126
44	Shim, .005″ th. for use between upper and lower halves of armature shaft bearings	53879
44a	as above, except .003″ th.	53879–1

(Continued on following page)

January 1941 GENERAL RAILWAY SIGNAL COMPANY

Type SA Direct-Current Signal Mechanism

With Stepped or Compound Lenses
For Repair Parts Only

Drawing references are shown for convenience in checking shipping lists and invoices.

Fig. No.	Name	Drawing Reference
	Order by plate, figure number and name	
45	Bearing, knife-edge, for armature shaft	53828–1
46	Bearing Bracket, for supporting one end of armature shaft	53064–2
47	Washer, for use between bearing bracket and poles	53097
48	Glass Case, for housing lower half of mechanism	37380–8
49	Screw, ¼″–20 x ⅞″ lg. for fastening brackets Figs. 24 and 46 to case, four required	45048–8
50	Screw, No. 8–32 x 13/32″ collar hd., for fastening bearing to bracket	53829–2
51	Stud, as shown, for fastening poles to brackets, four required	441–117
52	Stud, 7/16″ dia. x 5⅜″ lg. for fastening magnet to poles	879–31
53	Nut, 7/16″–14 hex., for stud Fig. 52	54247
54	Leather Washer, for use between glass case and stirrup on mechanism case	4553
55	Pole Complete, right hand	53101 Gr. 1
56	Magnets Complete, as shown, includes spacers and holders	54419 Gr. 1
57	Pole Complete, left hand, as shown	53101 Gr. 1
58	Lens, 4½″ dia., 6½″ focus, for use with compound lens signals	54249–3
59	Sleeve, for springs Figs. 34 and 38	15284–17
60	Block, only, for terminal block	47508–27
61	Carborundum Plate, used as lightning protection	41786–2
62	Connector, for carborundum plate	4906–40
63	Screw, No. 14–24 x 1½″ sq. hd., used as terminal post	350–3
64	Nut, No. 14–24 hex., for terminal posts	42843–1
65	Washer, for terminal posts	1225–2
66	Nut, No. 14–24 x 3/16″ hex., for terminal posts	42839–1
67	Color Disc Complete, red, A.A.R. Standard, assembled in retaining cup	53073 Gr. 2
67a	as above, except yellow with one side depolished, A.A.R. Standard	53073 Gr. 12
67b	same as Fig. 67, except green, pre-cracked, A.A.R. Standard	53073 Gr. 3
67c	same as Fig. 67, except purple, A.A.R. Standard	53073 Gr. 7

PLATE H2647

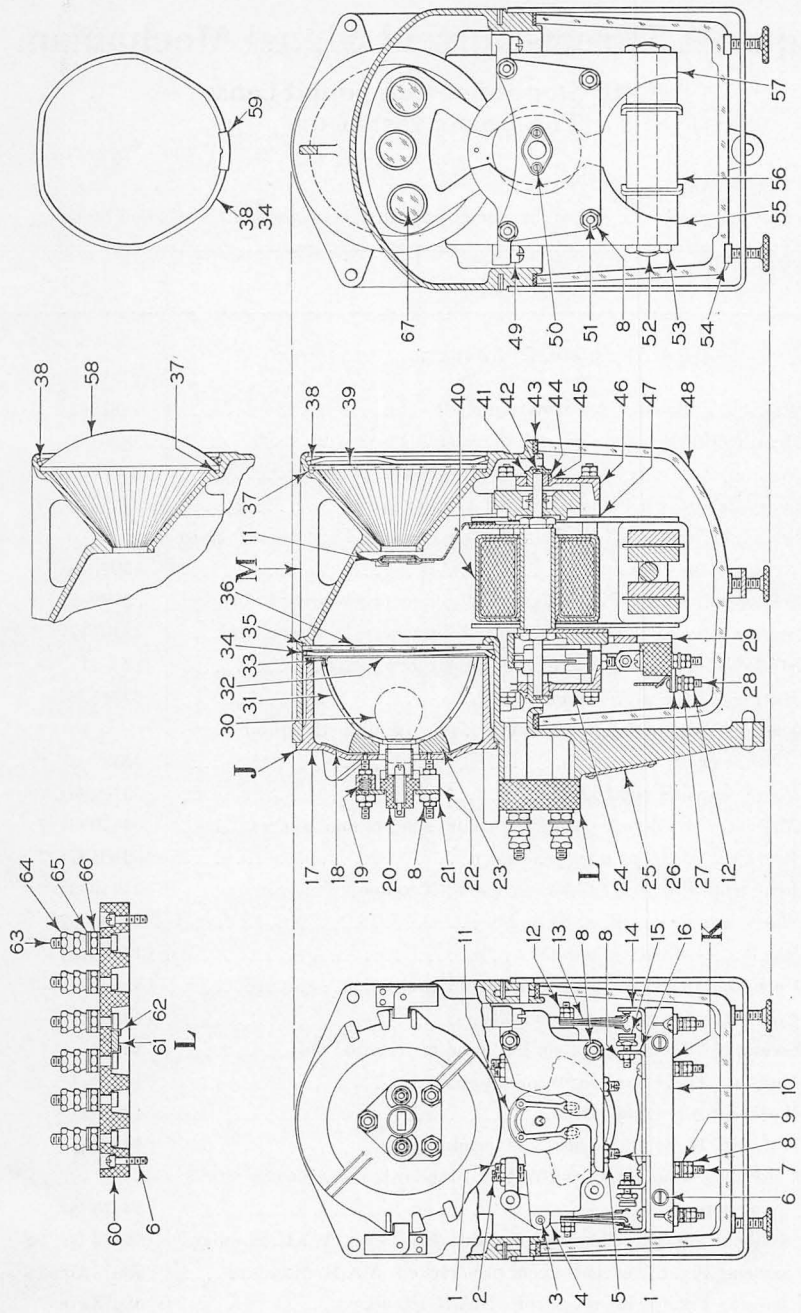

Type SA Direct-Current Signal Mechanism
For Repair Parts Only

January 1941 GENERAL RAILWAY SIGNAL COMPANY

Type SA Direct-Current Signal Mechanism

With Stepped or Compound Lenses
For Repair Parts Only

Note: This plate is included for ordering repair parts only for mechanisms, drawing Nos. 53052–16 and 53052–17.

For latest direct-current mechanisms see Plates H2649 to H2655.

Drawing references are shown for convenience in checking shipping lists and invoices.

Fig. No.	Name	Drawing Reference
	Order by plate, figure number and name	
J	Reflector Unit Complete, comprises parts Fig. 8, 17 to 23, and 30 to 33 inclusive. Does not include lamp Fig. 30, which must be ordered separately	53056–1 Gr. 1
K	Contact Block Complete, as shown. Comprises parts Figs. 7, 8, 9, 10, 12, 14, 15, 16, 26, 27 and 28	53053 Gr. 8
L	Terminal Block Complete, as shown. Comprises parts Figs. 6 and 60 to 66 inclusive	53060 Gr. 4
M	Case Complete, includes all parts for housing mechanism. Does not include reflector unit, terminal block, glass Fig. 39 and glass case Fig. 48	53270–1 Gr. 1
1	Screw, No. 14–40 x 5/8″ lg., headless, used as stop for counterweight	5100–10
2	Screw, No. 14–40 x 7/8″ lg., headless, used as stop for armature	5100–6
3	Pin, .125″ dia. x 7/8″ lg., for counterweight	2644–5
4	Counterweight Complete, for mechanism	53703–1 Gr. 1
5	Nut, No. 14–40 x 1/8″ hex. for screws Figs. 1 and 2	53084–1
6	Screw, No. 10–32 x 3/4″, fil. hd., for fastening contact block to bracket	12563–5
7	Screw, No. 10–32 x 1 1/2″ rd. hd., terminal post for contact block	2438–24
8	Nut, No. 10–32 x 1/8″ hex., for terminal posts and contacts, also for stud Fig. 51	40796
9	Washer, for terminal posts	40791
10	Terminal Block, only	47508–49
11	Armature Complete, with miniature roundels, for three indication unit, giving green, red and yellow indications. Includes spectacles, fly wheel, vane and all riveted parts mounted on shaft	53055–8 Gr. 1

(Continued on following page)

GENERAL RAILWAY SIGNAL COMPANY January 1941

Type SA Direct-Current Signal Mechanism

With Stepped or Compound Lenses
For Repair Parts Only

Drawing references are shown for convenience in checking shipping lists and invoices.

Fig. No.	Name	Drawing Reference
	Order by plate, figure number and name	
11a	as above, except for two indication unit giving purple and yellow indications	53055-8 Gr. 2
11b	same as Fig. 11, except for two indication unit giving red and yellow indications	53055-8 Gr. 3
12	Nut, No. 8-32 x 1/8" hex., for fastening fingers to counterweight, also for terminal posts Fig. 28	3891-1
13	Contact Finger Complete, as shown, two required	53059-3 Gr. 1
14	Back Contact Complete, includes silver contact, as shown, two required	13061-52 Gr. 2
15	Contact Complete, as shown, two required	42799-7 Gr. 8
16	Terminal, for contact Fig. 15	51559-11
17	Holder, for reflector unit Fig. J, includes studs for mounting receptacle riveted in place	53068-2 441-120
18	Washer, for use between pad and holder for reflector	590-25
19	Spring, for receptacle	586-32
20	Lamp Receptacle Complete, for details and order references see Plate H2669	53058-5 Gr. 2
21	Nut, No. 10-32 hex., for stud on holder	46277-1
22	Nut, No. 10-32, cup shape, for spring	20673-2
23	Washer, for use behind reflector	1533-32
24	Bearing Bracket, as shown, for supporting one end of armature shaft	53063-6
25	Name Plate, with screws, for mechanism	401-223 54392-13
26	Insulation, for contact block	53109
27	Washer, for screw Fig. 28	2534-1
28	Screw, No. 8-32 x 3/4" rd. hd., used as terminal post on contact block	2553-19

(Continued on following page)

January 1941 GENERAL RAILWAY SIGNAL COMPANY

Type SA Direct-Current Signal Mechanism

With Stepped or Compound Lenses
For Repair Parts Only

Drawing references are shown for convenience in checking shipping lists and invoices.

Fig. No.	Name	Drawing Reference
	Order by plate, figure number and name	
29	Bracket, as shown, for supporting counterweights and contact block	53063–7
30	Incandescent Lamp, 2 pin candelabra single contact bayonet base, S-8 bulb, single filament, 1000 hour rating, 11.3 volts, 13.3 watts, recommended for operation on 10 volts	34866–32
30a	as above, except S-11 bulb, single filament, 1000 hour rating, 8 volts, 10 watts, recommended for operation on 7.2 volts	34866–43
30b	same as Fig. 30, except S-11 bulb, major and minor filaments in multiple, 1000 hour rating, 8 volts, 13+3.5 watts, recommended for operation on 7.2 volts	34866–37
30c	same as Fig. 30, except S-11 bulb, single filament, 1000 hour rating, 9 volts, 15.3 watts, recommended for operation on 8 volts	34866–34
30d	same as Fig. 30, except S-11 bulb, major and minor filaments in multiple, 1000 hour rating, 10 volts, 13+3.5 watts, recommended for operation on 9 volts	34866–60
30e	same as Fig. 30, except S-11 bulb, single filament, 1000 hour rating, 10 volts, 25 watts, recommended for operation on 9 volts	34866–47
30f	same as Fig. 30, except S-11 bulb, single filament, 2000 hour rating, 13.5 volts, 17 watts, recommended for operation on 12 volts	34866–25
30g	same as Fig. 30, except G-16½ bulb, single filament, 1000 hour rating, 115 volts, 25 watts, recommended for operation on 110 volts	34866–45
30h	same as Fig. 30, except S-11 bulb, single filament, 1000 hour rating, 4 volts, 3 watts, recommended for compound lens signal only, for operation on 4 volts	34866–35
30j	same as Fig. 30, except S-11 bulb, single filament, 1000 hour rating, 8 volts, 5 watts, recommended for compound lens signals only, for operation on 8 volts	34866–55

(Continued on following page)

GENERAL RAILWAY SIGNAL COMPANY January 1941

Type SA Direct-Current Signal Mechanism

With Stepped or Compound Lenses
For Repair Parts Only

Drawing references are shown for convenience in checking shipping lists and invoices.

Fig. No.	Name	Drawing Reference
	Order by plate, figure number and name	
30k	same as Fig. 30, except S-11 bulb, major and minor filaments in multiple, 1000 hour rating, 8 volts, 5+3.5 watts, recommended for compound lens signals only, for operation on 8 volts	34866–58
30m	same as Fig. 30, except S-11 bulb, single filament, 1000 hour rating, 10 volts, 5 watts, recommended for compound lens signal only, for operation on 10 volts	34866–38
31	Reflector, glass, as shown	53122
32	Retaining Ring, for reflector	45647–5
33	Screw, No. 4–36 x ¼″ fl. hd., for fastening retainer to holder	35699–2
34	Spring, with sleeve, for fastening glass Fig. 36 in case	51107–3 15284–17
35	Gasket, rubber, for use between glass and case	52983–1
36	Glass, for reflector unit compartment	924–11
37	Gasket, rubber, for use with glass Fig. 39 or lens Fig. 58	52983–2
38	Spring, with sleeve, for fastening glass in case	51107–6 15284–17
39	Outer Cover Glass, for use in position shown	924–17
40	Line Coil, 105 ohms resistance, for 4 volt operation. Includes bakelite shell	53121–1 Gr. 6
40a	as above, except 250 ohms resistance for 7.5–8 volt operation	53121–1 Gr. 2
40b	same as Fig. 40 except 380 ohms resistance, for 10 volt operation	53121–1 Gr. 3
40c	same as Fig. 40 except 500 ohms resistance, for 12 volt operation	53121–1 Gr. 5
41	Bearing, upper half, for armature shaft	53828
42	Ball, for use at ends of armature shaft	36126–4
43	Gasket, for use between glass case and mechanism case	13014–126
44	Shim, .005″ th. for use between upper and lower halves of armature shaft bearings	53879
44a	as above, except .003″ th.	53879–1

(Continued on following page)

January 1941 GENERAL RAILWAY SIGNAL COMPANY

Type SA Direct-Current Signal Mechanism

With Stepped or Compound Lenses
For Repair Parts Only

Drawing references are shown for convenience in checking shipping lists and invoices.

Fig. No.	Name	Drawing Reference
	Order by plate, figure number and name	
45	Bearing, knife-edge, for armature shaft	53828-1
46	Bearing Bracket, for supporting one end of armature shaft	53064-2
47	Washer, for use between bearing bracket and poles	53097
48	Glass Case, for housing lower half of mechanism	37380-8
49	Screw, 1/4"-20 x 7/8" lg. for fastening brackets Figs. 24 and 46 to case, four required	45048-8
50	Screw, No. 8-32 x 13/32" collar hd., for fastening bearing to bracket	53829-2
51	Stud, as shown, for fastening poles to brackets, four required	441-117
52	Stud, 7/16" dia. x 5 3/8" lg. for fastening magnet to poles	879-31
53	Nut, 7/16"-14 hex., for stud Fig. 52	54247
54	Leather Washer, for use between glass case and stirrup on mechanism case	4553
55	Pole, right hand, for use in position shown	53087-1
56	Magnets Complete, as shown, includes spacers and holders	54419 Gr. 1
57	Pole, left hand, as shown	53087-2
58	Lens, 4 1/2" dia., 6 1/2" focus, for use with compound lens signals	54249-3
59	Sleeve, for springs Figs. 34 and 38	15284-17
60	Block, only, for terminal block	47508-27
61	Carborundum Plate, used as lightning protection	41786-2
62	Connector, for carborundum plate	4906-40
63	Screw, No. 14-24 x 1 1/2" sq. hd., used as terminal post	350-3
64	Nut, No. 14-24 hex., for terminal posts	42843-1
65	Washer, for terminal posts	1225-2
66	Nut, No. 14-24 x 3/16" hex., for terminal posts	42839-1
67	Color Disc Complete, red, A.A.R. Standard, assembled in retaining cup	53073 Gr. 2
67a	as above, except yellow with one side depolished, A.A.R. Standard	53073 Gr. 12
67b	same as Fig. 67, except green, pre-cracked, A.A.R. Standard	53073 Gr. 3
67c	same as Fig. 67, except purple, A.A.R. Standard	53073 Gr. 7

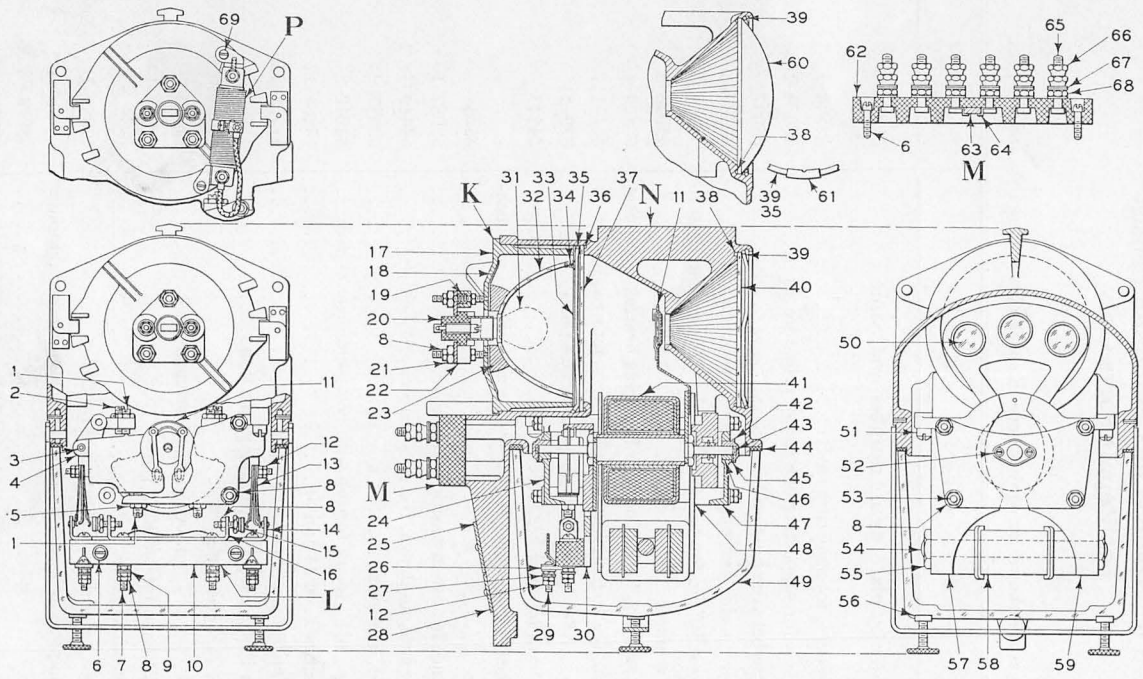

For Stepped Lens Signals

A—For 4 Volt Operation
B—For 7.5–8 Volt Operation
C—For 10 Volt Operation
D—For 12 Volt Operation

For Compound Lens Signals

E—For 4 Volt Operation
F—For 7.5–8 Volt Operation
G—For 10 Volt Operation
H—For 12 Volt Operation

Type SA Direct-Current Signal Mechanism

January 1941 GENERAL RAILWAY SIGNAL COMPANY

Type SA Direct-Current Signal Mechanism

With Stepped or Compound Lenses and Slide Arrangement

Note: Mechanisms shown on this plate may be used in either high or dwarf signals.

If other color combinations than those listed are desired or if signals are to operate on voltages other than those listed, same will be furnished when specified.

Lamps, Fig. 31, are not included with mechanisms complete and must be ordered separately.

For other direct-current mechanisms see Plate H2651 to H2655.

Drawing references are shown for convenience in checking shipping lists and invoices.

Fig. No.	Name	Drawing Reference
	Order by plate, figure number and name	
A	Type SA Direct-Current Signal Mechanism Complete, as shown, equipped with cover glass Fig. 40, for use with stepped lens signals. For 4 volt operation, arranged to give three indications, namely: green, red and yellow.....	53052–25 Gr. 43
A1	as above, except with one ohm resistance unit Fig. P.....	53052–34 Gr. 43
A2	same as Fig. A except with five ohm resistance unit Fig. P1.....	53052–35 Gr. 43
B	Type SA Direct-Current Signal Mechanism Complete, equipped with cover glass Fig. 40, for use with stepped lens signals. For 7.5–8 volt operation, arranged to give three indications namely: green, red and yellow.....	53052–25 Gr. 1
B1	as above, except with one ohm resistance unit Fig. P.....	53052–34 Gr. 1
B2	same as Fig. B except with five ohm resistance unit Fig. P1.....	53052–35 Gr. 1
C	Type SA Direct-Current Signal Mechanism Complete, equipped with cover glass Fig. 40, for use with stepped lens signals. For 10 volt operation, arranged to give three indications namely: green, red and yellow.....	53052–25 Gr. 29
C1	as above, except with one ohm resistance unit Fig. P.....	53052–34 Gr. 29
C2	same as Fig. C, except with five ohm resistance unit Fig. P1.....	53052–35 Gr. 29
D	Type SA Direct-Current Signal Mechanism Complete, equipped with cover glass Fig. 40, for use with stepped lens signals. For 12 volt operation, arranged to give three indications, namely: green, red and yellow.....	53052–25 Gr. 15
D1	as above, except with one ohm resistance unit Fig. P.....	53052–34 Gr. 15
D2	same as Fig. D except with five ohm resistance unit Fig. P1.....	53052–35 Gr. 15

(Continued on following page)

GENERAL RAILWAY SIGNAL COMPANY January 1941

Type SA Direct-Current Signal Mechanism

With Stepped or Compound Lenses and Slide Arrangement

Drawing references are shown for convenience in checking shipping lists and invoices.

Fig. No.	Name	Drawing Reference
	Order by plate, figure number and name	
E	Type SA Direct-Current Signal Mechanism Complete, equipped with lens Fig. 60, for use with compound lens signals. For 4 volt operation, arranged to give three indications, namely: green, red and yellow	53052–26 Gr. 43
E1	as above, except with one ohm resistance unit Fig. P	53052–36 Gr. 43
E2	same as Fig. E, except with five ohm resistance unit Fig. P1	53052–37 Gr. 43
F	Type SA Direct-Current Signal Mechanism Complete, equipped with lens Fig. 60, for use with compound lens signals. For 7.5–8 volt operation, arranged to give three indications, namely: green, red and yellow	53052–26 Gr. 1
F1	as above, except with one ohm resistance unit Fig. P	53052–36 Gr. 1
F2	same as Fig. F, except with five ohm resistance unit Fig. P1	53052–37 Gr. 1
G	Type SA Direct-Current Signal Mechanism Complete, equipped with lens Fig. 60, for use with compound lens signals. For 10 volt operation, arranged to give three indications, namely: green, red and yellow	53052–26 Gr. 29
G1	as above, except with one ohm resistance unit Fig. P	53052–36 Gr. 29
G2	same as Fig. G, except with five ohm resistance unit Fig. P1	53052–37 Gr. 29
H	Type SA Direct-Current Signal Mechanism Complete, equipped with lens Fig. 60, for use with compound lens signals. For 12 volt operation, arranged to give three indications, namely: green, red and yellow	53052–26 Gr. 15
H1	as above, except with one ohm resistance unit Fig. P	53052–36 Gr. 15
H2	same as Fig. H except with five ohm resistance unit Fig. P1	53052–37 Gr. 15
K	Reflector Unit Complete, comprises parts Fig. 8, 17 to 23, and 32 to 34 inclusive. Does not include lamp, Fig. 31 which must be ordered separately	53056–1 Gr. 1
L	Terminal Block Complete, as shown. Comprises parts Figs. 7, 8, 9, 10, 12, 14, 15, 16, 26, 27, and 29	53053 Gr. 8

(Continued on following page)

January 1941 GENERAL RAILWAY SIGNAL COMPANY

Type SA Direct-Current Signal Mechanism

With Stepped or Compound Lenses and Slide Arrangement

Drawing references are shown for convenience in checking shipping lists and invoices.

Fig. No.	Name	Drawing Reference
	Order by plate, figure number and name	
M	Terminal Block Complete, as shown. Comprises parts Figs. 6 and 62 to 68 inclusive	53060 Gr. 4
N	Case Complete, includes all parts for housing mechanism. Does not include reflector unit, terminal block, glass Fig. 40 or glass case Fig. 49	53270-1 Gr. 3
P	Resistance Unit Complete, one ohm, 2.5 amps., with mounting screws	55945-1 Gr. 3
P1	as above, except five ohms, 1 amp	55945-1 Gr. 1
1	Screw, No. 14-40 x 5/8" lg., headless, used as stop for counterweight	5100-10
2	Screw, No. 14-40 x 7/8" lg., headless, used as stop for armature	5100-6
3	Pin, .125" dia. x 7/8" lg. for counterweight	2644-5
4	Counterweight Complete, for mechanism	53703-1 Gr. 1
5	Nut, No. 14-40 x 1/8" th. hex., for screws Figs. 1 and 2	53084-1
6	Screw, No. 10-32 x 3/4" fil. hd. for fastening contact block to bracket	12563-5
7	Screw, No. 10-32 x 1 1/2" rd. hd., terminal post for contact block	2438-24
8	Nut, No. 10-32 x 1/8" hex., for terminal posts and contacts, also for stud Fig. 53	40796
9	Washer, for terminal posts	40791
10	Terminal Block, only	47508-49
11	Armature Complete, with miniature roundels, for three indication unit, giving green, red and yellow indications. Includes spectacles, fly wheel, vane and all riveted parts mounted on shaft	53055-8 Gr. 1
11a	as above, except for two indication unit giving purple and yellow indications	53055-8 Gr. 2
11b	same as Fig. 11, except for two indication unit giving red and yellow indications	53055-8 Gr. 3
12	Nut, No. 8-32 x 1/8" th. hex., for fastening fingers to counterweight, also for terminal posts Fig. 29	3891-1

(Continued on following page)

GENERAL RAILWAY SIGNAL COMPANY January 1941

Type SA Direct-Current Signal Mechanism

With Stepped or Compound Lenses and Slide Arrangement

Drawing references are shown for convenience in checking shipping lists and invoices.

Fig. No.	Name	Drawing Reference
	Order by plate, figure number and name	
13	Contact Finger Complete, as shown, two required	53059-3 Gr. 1
14	Back Contact Complete, includes silver contact, as shown, two required	13061-52 Gr. 2
15	Contact Complete, as shown, two required	42799-7 Gr. 8
16	Terminal, for contact Fig. 15	51559-11
17	Holder, for reflector unit Fig. K, includes studs for mounting receptacle riveted in place	53068-2 441-120
18	Washer, for use between pad and holder for reflector	590-25
19	Spring, for receptacle	586-32
20	Lamp Receptacle Complete, for details and order references see Plate H2669	53058-5 Gr. 2
21	Nut, No. 10-32 hex., for stud on holder	46277-1
22	Nut, No. 10-32, cup shape for spring	20673-2
23	Washer, for use behind reflector	1533-32
24	Bearing Bracket, as shown, for supporting one end of armature shaft	53063-6
25	Name Plate, with screws, for mechanism	401-223 54392-13
26	Insulation, for contact block	53109
27	Washer, for screw Fig. 29	2534-1
28	Name Plate, with screws, for mechanism	401-220 54392-13
29	Screw, No. 8-32 x ¾″ rd. hd., used as terminal post on contact block	2553-19
30	Bracket, as shown, for supporting counterweights and contact block	53063-7
31	Incandescent Lamp, 2 pin, candelabra single contact bayonet base S-8 bulb, single filament, 1000 hour rating, 11.3 volts, 13.3 watts, recommended for operation on 10 volts	34866-32

(*Continued on following page*)

Type SA Direct-Current Signal Mechanism

With Stepped or Compound Lenses and Slide Arrangement

Drawing references are shown for convenience in checking shipping lists and invoices.

Fig. No.	Name	Drawing Reference
	Order by plate, figure number and name	
31a	as above, except S-11 bulb, single filament, 1000 hour rating, 8 volts, 10 watts, recommended for operation on 7.2 volts.....	34866–43
31b	same as Fig. 31 except S-11 bulb, major and minor filaments in multiple, 1000 hour rating, 8 volts, 13+3.5 watts, recommended for operation on 7.2 volts.....	34866–37
31c	same as Fig. 31, except S-11 bulb, single filament, 1000 hour rating, 9 volts, 15.3 watts, recommended for operation on 8 volts..	34866–34
31d	same as Fig. 31, except S-11 bulb, major and minor filaments in multiple, 1000 hour rating, 10 volts, 13+3.5 watts, recommended for operation on 9 volts.....	34866–60
31e	same as Fig. 31, except S-11 bulb, single filament, 1000 hour rating, 10 volts, 25 watts, recommended for operation on 9 volts..	34866–47
31f	same as Fig. 31, except S-11 bulb, single filament, 2000 hour rating, 13.5 volts, 17 watts, recommended for operation on 12 volts	34866–25
31g	same as Fig. 31, except G-16½ bulb, single filament, 1000 hour rating, 115 volts, 25 watts, recommended for operation on 110 volts.....	34866–45
31h	same as Fig. 31, except S-11 bulb, single filament, 1000 hour rating, 4 volts, 3 watts, recommended for compound lens signals only, for operation on 4 volts.....	34866–35
31j	same as Fig. 31, except S-11 bulb, single filament, 1000 hour rating, 8 volts, 5 watts, recommended for compound lens signals only, for operation on 8 volts.....	34866–55
31k	Same as Fig. 31, except S-11 bulb, major and minor filaments in multiple, 1000 hour rating, 8 volts, 5+3.5 watts, recommended for compound lens signals only, for operation on 8 volts.....	34866–58
31m	same as Fig. 31, except S-11 bulb, single filament, 1000 hour rating, 10 volts, 5 watts, recommended for compound lens signals only, for operation on 10 volts.....	34866–38

(*Continued on following page*)

GENERAL RAILWAY SIGNAL COMPANY January 1941

Type SA Direct-Current Signal Mechanism

With Stepped or Compound Lenses and Slide Arrangement

Drawing references are shown for convenience in checking shipping lists and invoices.

Fig. No.	Name	Drawing Reference
	Order by plate, figure number and name	
32	Reflector, glass, as shown	53122
33	Retaining Ring, for reflector	45647–5
34	Screw, No. 4–36 x ¼″ fl. hd. for fastening retainer to holder	35699–2
35	Spring, with sleeve, for fastening glass Fig. 37 in case	51107–3 15284–17
36	Gasket, rubber, for use between glass and case	52983–1
37	Glass, for reflector unit compartment	924–11
38	Gasket, rubber, for use with glass Fig. 40 or lens Fig. 60	52983–3
39	Spring, with sleeve, for fastening glass in case	51107–6 15284–17
40	Outer cover glass, for use in position shown	924–17
41	Line Coil, 105 ohms resistance, for 4 volt operation. Includes bakelite shell	53121–1 Gr. 6
41a	as above, except 250 ohms resistance, for 7.5–8 volt operation	53121–1 Gr. 2
41b	same as Fig. 41 except 380 ohms resistance, for 10 volt operation	53121–1 Gr. 3
41c	same as Fig. 41 except 500 ohms resistance, for 12 volt operation	53121–1 Gr. 5
42	Bearing, upper half, for armature shaft	53823
43	Ball, for use at ends of armature shaft	36126–4
44	Gasket, for use between glass case and mechanism case	13014–126
45	Shim, .005″ th. for use between upper and lower halves of armature shaft bearings	53879
45a	as above except .003″ th.	53879–1
46	Bearing, knife edge, for armature shaft	53828–1
47	Bearing Bracket, for supporting one end of armature shaft	53064–2
48	Washer, for use between bearing bracket and poles	53097
49	Glass Case, for housing lower half of mechanism	37380–8
50	Color Disc Complete, red, A.A.R. Standard, assembled in retaining cup	53073 Gr. 2
50a	as above, except yellow with one side depolished, A.A.R. Standard	53073 Gr. 12

(*Continued on following page*)

Type SA Direct-Current Signal Mechanism

With Stepped or Compound Lenses and Slide Arrangement

Drawing references are shown for convenience in checking shipping lists and invoices.

Fig. No.	Name	Drawing Reference
	Order by plate, figure number and name	
50b	same as Fig. 50, except green, pre-cracked, A.A.R. Standard	53073 Gr. 3
50c	same as Fig. 50 except purple, A.A.R. Standard	53073 Gr. 7
51	Screw, 1/4"–20 x 7/8" lg. for fastening brackets Fig. 24 and 47 to case, four required	45048–8
52	Screw, No. 8–32 x 13/32" collar hd., for fastening bearing to brackets	53829–2
53	Stud, as shown, for fastening poles to brackets, four required	441–117
54	Stud, 7/16" dia. x 5 3/8" lg., for fastening magnet to poles	879–31
55	Nut, 7/16"–14, hex., for stud, Fig. 54	54247
56	Leather Washer, for use between glass case and stirrup on mechanism case	4553
57	Pole, right hand, used in position shown	53087–1
58	Magnet Complete, as shown, includes spacers and holders	54419 Gr. 1
59	Pole, left hand, used in position shown	53087–2
60	Lens, 4 1/2" dia., 6 1/2" focus, for use with compound lens signals	54249–3
61	Sleeve, for springs Figs. 35 and 39	15284–17
62	Block, only, for terminal block	47508–27
63	Carborundum Plate, used as lightning protection	41786–2
64	Connector, for carborundum plate	4906–40
65	Screw No. 14–24 x 1 1/2" sq. hd. used as terminal post	350–3
66	Nut, No. 14–24 hex. for terminal posts	42843–1
67	Washer for terminal posts	1225–2
68	Nut, No. 14–24 x 3/16" hex., for terminal posts	42839–1
69	Screw, No. 8–32 x 5/16" rd. hd., with lock washer, for fastening resistance units Fig. P to holder Fig. 17	2553–9 53029–4

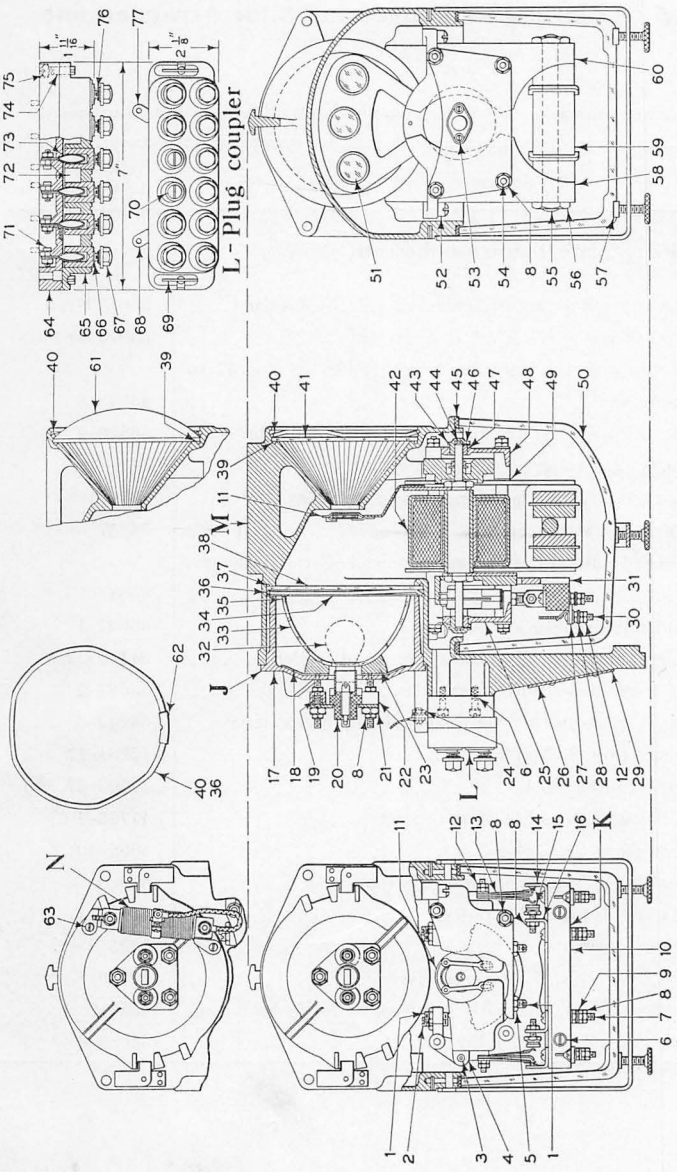

For Stepped Lens Signals
A—For 4 Volt Operation
B—For 7.5–8 Volt Operation
C—For 10 Volt Operation
D—For 12 Volt Operation

For Compound Lens Signals
E—For 4 Volt Operation
F—For 7.5–8 Volt Operation
G—For 10 Volt Operation
H—For 12 Volt Operation

Type SA Direct-Current Signal Mechanism

January 1941 GENERAL RAILWAY SIGNAL COMPANY

Type SA Direct-Current Signal Mechanism

With Stepped or Compound Lenses, Slide Arrangement and Plug Coupler

Note: Mechanisms shown on this plate may be used in either high or dwarf signals.

If other color combinations than those listed are desired or if signals are to operate on voltages other than those listed, same will be furnished when specified.

Lamps, Fig. 32, are not included with mechanisms complete and must be ordered separately.

For other direct-current mechanisms see Plate H2649, H2653 and H2655.

Drawing references are shown for convenience in checking shipping lists and invoices.

Fig. No.	Name	Drawing Reference
	Order by plate, figure number and name	
A	Type SA Direct-Current Signal Mechanism Complete, as shown, equipped with cover glass Fig. 41 for use with stepped lens signals. For 4 volt operation, arranged to give three indications, namely: green, red and yellow	53052–22 Gr. 43
A1	as above, except with one ohm resistance unit Fig. N	53052–30 Gr. 43
A2	same as Fig. A, except with five ohm resistance unit Fig. N1	53052–31 Gr. 43
B	Type SA Direct-Current Signal Mechanism Complete, equipped with cover glass Fig. 41 for use with stepped lens signals. For 7.5–8 volt operation, arranged to give three indications, namely: green, red and yellow	53052–22 Gr. 1
B1	as above, except with one ohm resistance unit Fig. N	53052–30 Gr. 1
B2	same as Fig. B, except with five ohm resistance unit Fig. N1	53052–31 Gr. 1
C	Type SA Direct-Current Signal Mechanism Complete, equipped with cover glass Fig. 41, for use with stepped lens signals. For 10 volt operation, arranged to give three indications, namely: green, red and yellow	53052–22 Gr. 29
C1	as above, except with one ohm resistance unit Fig. N	53052–30 Gr. 29
C2	same as Fig. C, except with five ohm resistance unit Fig. N1	53052–31 Gr. 29
D	Type SA Direct-Current Signal Mechanism Complete, equipped with cover glass Fig. 41, for use with stepped lens signals. For 12 volt operation, arranged to give three indications, namely: green, red and yellow	53052–22 Gr. 15
D1	as above, except with one ohm resistance unit Fig. N	53052–30 Gr. 15

(Continued on following page)

GENERAL RAILWAY SIGNAL COMPANY January 1941

Type SA Direct-Current Signal Mechanism

With Stepped or Compound Lenses, Slide Arrangement and Plug Coupler

Drawing references are shown for convenience in checking shipping lists and invoices.

Fig. No.	Name	Drawing Reference
	Order by plate, figure number and name	
D2	same as Fig. D, except with five ohm resistance unit Fig. N1....	53052–31 Gr. 15
E	Type SA Direct-Current Signal Mechanism Complete, equipped with lens Fig. 61, for use with compound lens signals. For 4 volt operation, arranged to give three indications, namely: green, red and yellow.....	53052–24 Gr. 43
E1	as above, except with one ohm resistance unit Fig. N.....	53052–32 Gr. 43
E2	same as Fig. E, except with five ohm resistance unit Fig. N1....	53052–33 Gr. 43
F	Type SA Direct-Current Signal Mechanism Complete, equipped with lens Fig. 61, for use with compound lens signals. For 7.5–8 volt operation, arranged to give three indications, namely: green, red and yellow.....	53052–24 Gr. 1
F1	as above, except with one ohm resistance unit Fig. N.....	53052–32 Gr. 1
F2	same as Fig. F, except with five ohm resistance unit Fig. N1....	53052–33 Gr. 1
G	Type SA Direct-Current Signal Mechanism Complete, equipped with lens Fig. 61, for use with compound lens signals. For 10 volt operation, arranged to give three indications, namely: green, red and yellow.....	53052–24 Gr. 29
G1	as above, except with one ohm resistance unit Fig. N.....	53052–32 Gr. 29
G2	same as Fig. G, except with five ohm resistance unit Fig. N1....	53052–33 Gr. 29
H	Type SA Direct-Current Signal Mechanism Complete, equipped with lens Fig. 61, for use with compound lens signals. For 12 volt operation, arranged to give three indications, namely: green, red and yellow.....	53052–24 Gr. 15
H1	as above, except with one ohm resistance unit Fig. N.....	53052–32 Gr. 15
H2	same as Fig. H, except with five ohm resistance unit Fig. N1....	53052–33 Gr. 15
J	Reflector Unit Complete, comprises parts Fig. 8, 17 to 23, and 33 to 35 inclusive. Does not include lamp Fig. 32 which must be ordered separately.....	53056–1 Gr. 2

(Continued on following page)

Type SA Direct-Current Signal Mechanism

With Stepped or Compound Lenses, Slide Arrangement and Plug Coupler

Drawing references are shown for convenience in checking shipping lists and invoices.

Fig. No.	Name	Drawing Reference
	Order by plate, figure number and name	
K	Terminal Block Complete, as shown. Comprises parts Figs. 7, 8, 9, 10, 12, 14, 15, 16, 27, 28 and 30	53053 Gr. 8
L	Plug Coupler Complete, for mechanism	55839-1 Gr. 1
M	Case Complete, includes all parts for housing mechanism. Does not include reflector unit, terminal block, glass Fig. 41 or glass case Fig. 50	53270-1 Gr. 3
N	Resistance Unit Complete, one ohm, 2.5 amp., with mounting screws	55945-1 Gr. 3
N1	as above, except five ohm, 1 amp	55945-1 Gr. 1
1	Screw, No. 14-40 x 5/8" lg., headless, used as stop for counterweight	5100-10
2	Screw, No. 14-40 x 7/8" lg., headless used as stop for armature	5100-6
3	Pin, .125" dia. x 7/8" lg., for counterweight	2644-5
4	Counterweight Complete, for mechanism	53703-1 Gr. 1
5	Nut, No. 14-40 x 1/8" hex. for screws Figs. 1 and 2	53084-1
6	Screw, No. 10-32 x 3/4" fil. hd., for fastening contact block to bracket, also for mounting plug coupler	12563-5
7	Screw No. 10-32 x 1 1/2" rd. hd., terminal post for contact block	2438-24
8	Nut, No. 10-32 x 1/8" hex., for terminal posts and contacts, also for stud Fig. 54	40796
9	Washer, for terminal posts	40791
10	Terminal Block, only	47508-49
11	Armature Complete, with miniature roundels, for three indication unit, giving green, red and yellow indications. Includes spectacles, fly wheel, vane and all riveted parts mounted on shaft	53055-8 Gr. 1
11a	as above, except for two indication unit giving purple and yellow indications	53055-8 Gr. 2
11b	same as Fig. 11, except for two indication unit giving red and yellow indications	53055-8 Gr. 3

(Continued on following page)

GENERAL RAILWAY SIGNAL COMPANY January 1941

Type SA Direct-Current Signal Mechanism

With Stepped or Compound Lenses, Slide Arrangement and Plug Coupler

Drawing references are shown for convenience in checking shipping lists and invoices.

Fig. No.	Name	Drawing Reference
	Order by plate, figure number and name	
12	Nut, No. 8-32 x 1/8" hex., for fastening fingers to counterweight, also for terminal posts Fig. 30	3891-1
13	Contact Finger Complete, as shown, two required	53059-3 Gr. 1
14	Back Contact Complete, includes silver contact, as shown, two required	13061-52 Gr. 2
15	Contact Complete, as shown, two required	42799-7 Gr. 8
16	Terminal, for contact Fig. 15	51559-11
17	Holder, for reflector unit Fig. J, includes studs for mounting receptacle riveted in place	53068-2 441-120
18	Washer, for use between pad and holder for reflector	590-25
19	Spring, for receptacle	586-32
20	Lamp Receptacle Complete, for details and order references see Plate H2669	53058-5 Gr. 3
21	Nut, No. 10-32 hex., for stud on holder	46277-1
22	Nut, No. 10-32, cup shape, for spring	20673-2
23	Washer, for use behind reflector	1533-32
24	Screw No. 10-32 x 1" rd. hd., with hex. nuts and washers, for connection on plug coupler	2438-1 53029-7 5046-5 1601-79
25	Bearing Bracket, as shown, for supporting one end of armature shaft	53063-6
26	Name Plate, with screws, for mechanism	401-223 54392-13
27	Insulation, for contact block	53109
28	Washer, for screw Fig. 30	2534-1
29	Name Plate, with screws, for mechanism	401-220 54392-13
30	Screw, No. 8-32 x 3/4" rd. hd., used as terminal post on contact block	2553-19

(Continued on following page)

Type SA Direct-Current Signal Mechanism

With Stepped or Compound Lenses, Slide Arrangement and Plug Coupler

Drawing references are shown for convenience in checking shipping lists and invoices.

Fig. No.	Name	Drawing Reference
	Order by plate, figure number and name	
31	Bracket, as shown, for supporting counterweights and contact block	53063–7
32	Incandescent Lamp, 2 pin, candelabra single contact bayonet base S-8 bulb, single filament, 1000 hour rating, 11.3 volts, 13.3 watts, recommended for operation on 10 volts	34866–32
32a	as above, except S-11 bulb, single filament, 1000 hour rating, 8 volts, 10 watts, recommended for operation on 7.2 volts	34866–43
32b	same as Fig. 32, except S-11 bulb, major and minor filaments in multiple, 1000 hour rating, 8 volts 13+3.5 watts, recommended for operation on 7.2 volts	34866–37
32c	same as Fig. 32, except S-11 bulb, single filament, 1000 hour rating, 9 volts, 15.3 watts, recommended for operation on 8 volts	34866–34
32d	same as Fig. 32, except S-11 bulb, major and minor filaments in multiple, 1000 hour rating, 10 volts, 13+3.5 watts, recommended for operation on 9 volts	34866–60
32e	same as Fig. 32, except S-11 bulb, single filament, 1000 hour rating, 10 volts, 25 watts, recommended for operation on 9 volts	34866–47
32f	same as Fig. 32, except S-11 bulb, single filament, 2000 hour rating, 13.5 volts, 17 watts, recommended for operation on 12 volts	34866–25
32g	same as Fig. 32, except G-16½ bulb, single filament, 1000 hour rating, 115 volts, 25 watts, recommended for operation on 110 volts	34866–45
32h	same as Fig. 32, except S-11 bulb, single filament, 1000 hour rating, 4 volts, 3 watts, recommended for compound lens signals only, for operation on 4 volts	34866–35
32j	same as Fig. 32, except S-11 bulb, single filament, 1000 hour rating, 8 volts, 5 watts, recommended for compound lens signals only, for operation on 8 volts	34866–55

(Continued on following page)

GENERAL RAILWAY SIGNAL COMPANY January 1941

Type SA Direct-Current Signal Mechanism

With Stepped or Compound Lenses, Slide Arrangement and Plug Coupler

Drawing references are shown for convenience in checking shipping lists and invoices.

Fig. No.	Name	Drawing Reference
	Order by plate, figure number and name	
32k	same as Fig. 32, except S-11 bulb, major and minor filaments in multiple, 1000 hour rating, 8 volts, 5+3.5 watts, recommended for compound lens signals only, for operation on 8 volts	34866–58
32m	same as Fig. 32, except S-11 bulb, single filament, 1000 hour rating, 10 volts, 5 watts, recommended for compound lens signals only, for operation on 10 volts	34866–38
33	Reflector, glass, as shown	53122
34	Retaining Ring, for reflector	45647–5
35	Screw, No. 4–36 x ¼″ fl. hd., for fastening retainer to holder	35699–2
36	Spring, with sleeve, for fastening glass Fig. 38 in case	51107–3 15284–17
37	Gasket, rubber, for use between glass and case	52983–1
38	Glass, for reflector unit compartment	924–11
39	Gasket, rubber, for use with glass Fig. 41 or lens Fig. 61	52983–3
40	Spring, with sleeve, for fastening glass in case	51107–6 15284–17
41	Outer Cover Glass, for use in position shown	924–17
42	Line Coil, 105 ohms resistance, for 4 volt operation. Includes bakelite shell	53121–1 Gr. 10
42a	as above, except 250 ohms resistance for 7.5–8 volt operation	53121–1 Gr. 7
42b	same as Fig. 42 except 380 ohms resistance, for 10 volt operation	53121–1 Gr. 8
42c	same as Fig. 42 except 500 ohms resistance, for 12 volt operation	53121–1 Gr. 9
43	Bearing, upper half, for armature shaft	53828
44	Ball, for use at ends of armature shaft	36126–4
45	Gasket, for use between glass case and mechanism case	13014–126
46	Shim, .005″ th. for use between upper and lower halves of armature shaft bearings	53879
46a	as above, except .003″ th	53879–1
47	Bearing, knife-edge, for armature shaft	53828–1

(*Continued on following page*)

Type SA Direct-Current Signal Mechanism

With Stepped or Compound Lenses, Slide Arrangement and Plug Coupler

Drawing references are shown for convenience in checking shipping lists and invoices.

Fig. No.	Name	Drawing Reference
	Order by plate, figure number and name	
48	Bearing Bracket, for supporting one end of armature shaft	53064-2
49	Washer, for use between bearing bracket and poles	53097
50	Glass Case, for housing lower half of mechanism	37380-8
51	Color Disc Complete, red, A.A.R. Standard, assembled in retaining cup	53073 Gr. 2
51a	as above, except yellow with one side depolished, A.A.R. Standard	53073 Gr. 12
51b	same as Fig. 51, except green, pre-cracked, A.A.R. Standard	53073 Gr. 3
51c	same as Fig. 51, except purple, A.A.R. Standard	53073 Gr. 7
52	Screw, 1/4"-20 x 7/8" lg. for fastening brackets Figs. 25 and 48 to case, four required	45048-8
53	Screw, No. 8-32 x 13/32" collar hd., for fastening bearing to bracket	53829-2
54	Stud, as shown, for fastening poles to brackets, four required	441-117
55	Stud, 7/16" dia. x 5 3/8" lg., for fastening magnet to poles	879-31
56	Nut, 7/16"-14, hex., for stud Fig. 55	54247
57	Leather Washer, for use between glass case and stirrup on mechanism case	4553
58	Pole, right hand, for use in position shown	53087-1
59	Magnets Complete, as shown, includes spacers and holders	54419 Gr. 1
60	Pole, left hand, as shown	53087-2
61	Lens, 4 1/2" dia., 6 1/2" focus, for use with compound lens signals	54249-3
62	Sleeve, for springs Figs. 36 and 40	15284-17
63	Screw, No. 8-32 x 5/16" rd. hd., with lock washer, for fastening resistance unit Fig. N to holder Fig. 17	2553-9 53029-4
64	Plugboard, only, lower half of plug coupler	55833-2
65	Plugboard, only, upper half of plug coupler	55833-3
66	Washer for screw Fig. 67	1225-2
67	Screw, No. 14-24, bakelite head, for plug coupler	56418-1
68	Terminal, left hand, for plug coupler	51559-54

(Continued on following page)

GENERAL RAILWAY SIGNAL COMPANY January 1941

Type SA Direct-Current Signal Mechanism

With Stepped or Compound Lenses, Slide Arrangement and Plug Coupler

Drawing references are shown for convenience in checking shipping lists and invoices.

Fig. No.	Name	Drawing Reference
	Order by plate, figure number and name	
69	Lock Pin, with $\frac{3}{32}$" dia. pin, for fastening upper plugboard to lower plugboard	7889–10 504–318
70	Screw, No. 14–24 x $\frac{1}{2}$" rd. hd., with lock washer, for plug coupler	50595–4 53029–2
71	Screw, No. 10–32 x $\frac{7}{16}$" sq. hd., with hex. nut and lock washer, for fastening wires to plug coupler	29151–21 40796 53029–7
72	Carborundum Shunt, with clip for plug coupler	56417 18547–51
73	Contact, only, for plug coupler	56182–1
74	Post, No. 14–24, for lock pin Fig. 69	42847–10
75	Spanner Nut, No. 14–24, for post Fig. 74	42840–3
76	Lock Washer, for screw Fig. 67	53029–2
77	Terminal, right hand, for plug coupler	51559–55

Memoranda

PLATE H2653

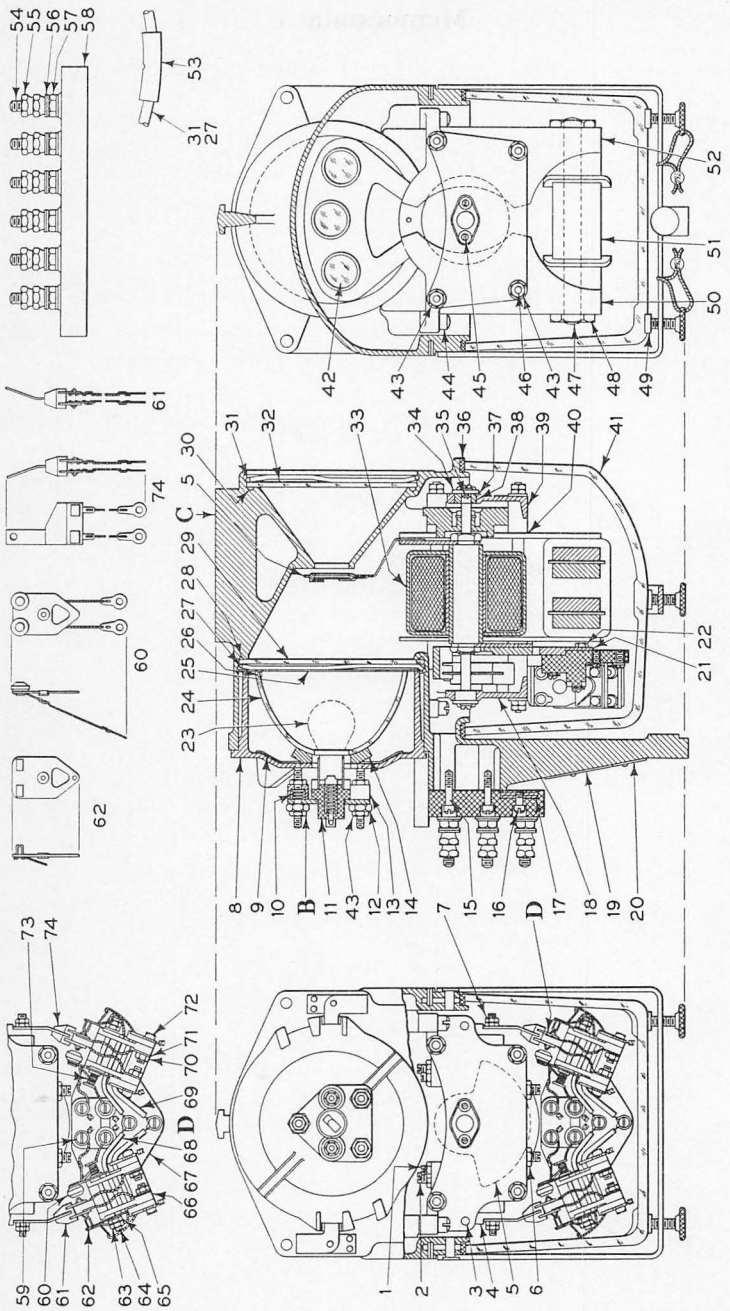

A—For 12 Volt Operation
Type SA Direct-Current Signal Mechanism

January 1941 GENERAL RAILWAY SIGNAL COMPANY

Type SA Direct-Current Signal Mechanism

With Stepped Lens, Slide Arrangement and Articulated Contacts (For S.F.O.B.B. Only)

Note: Mechanisms shown on this plate may be used in either high or dwarf signals.

If other color combinations than those listed are desired or if signals are to operate on voltages other than those listed, same will be furnished when specified.

This mechanism is equipped with eight independent contacts, that is, duplicate sets of independent front and back articulated contacts for both green and yellow positions.

Lamps Fig. 23 are not included with mechanisms complete and must be ordered separately.

For other direct-current mechanisms see Plates H2649, H2651, and H2655.

Drawing references are shown for convenience in checking shipping lists and invoices.

Fig. No.	Name	Drawing Reference
	Order by plate, figure number and name	
A	Type SA Direct-Current Signal Mechanism Complete, equipped with cover glass Fig. 32, for use with stepped lens signals. For 12 volt operation, arranged to give three indications, namely: green, red and yellow	53052-23 Gr. 15
B	Reflector Unit Complete, comprises parts Figs. 8 to 14, and 24 to 26, inclusive. Does not include lamp Fig. 23 which must be ordered separately	53056-1 Gr. 1
C	Case Complete, includes all parts for housing mechanism. Does not include reflector unit, terminal block, glass Fig. 32 or glass case Fig. 41	53270-1 Gr. 3
D	Contact Group Complete as shown	56130 Gr. 2
1	Screw, No. 14-40 x 5/8" lg., headless, used as stop for counterweight	5100-10
2	Screw, No. 14-40 x 7/8" lg., headless, used as stop for armature	5100-6
3	Pin, .125" dia. x 7/8" lg., for counterweight	2644-5
4	Counterweight Complete, for mechanism	53703-1 Gr. 1
5	Armature Complete, with miniature roundels, for three indication unit, giving green, red and yellow indications. Includes spectacles, fly wheel, vane and all riveted parts mounted on shaft	53055-8 Gr. 1
5a	as above, except for two indication unit giving purple and yellow indications	53055-8 Gr. 2

(Continued on following page)

GENERAL RAILWAY SIGNAL COMPANY January 1941

Type SA Direct-Current Signal Mechanism

With Stepped Lens, Slide Arrangement and Articulated Contacts

Drawing references are shown for convenience in checking shipping lists and invoices.

Fig. No.	Name	Drawing Reference
	Order by plate, figure number and name	
5b	same as Fig. 5, except for two indication unit giving red and yellow indications	53055-8 Gr. 3
6	Nut, No. 14-40 x 1/8" th. hex., for screws Figs. 1 and 2	53084-1
7	Nut, No. 8-32 x 1/8" th. hex., for fastening fingers to counterweight	3891-1
8	Holder, for reflector unit Fig. B, includes studs for mounting receptacle riveted in place	53068-2 441-120
9	Washer, for use between pad and holder, for reflector	590-25
10	Spring, for receptacle	586-32
11	Lamp Receptacle Complete, for details and order references see Plate H2669	53058-5 Gr. 2
12	Nut, No. 10-32 hex., for stud on holder	46277-1
13	Nut, No. 10-32 cup shape, for spring	20673-2
14	Washer, for use behind reflector	1533-32
15	Screw, No. 10-32 x 3/4" fil. hd., for fastening terminal block to case, for use in position shown	12563-5
16	Screw, No. 10-32 x 3/8" fil. hd., for fastening terminal block to plate Fig. 17	12563-22
17	Plate, for mounting terminal block	55378-4
18	Bearing Bracket, as shown, for supporting one end of armature shaft	53063-6
19	Name Plate, with screws, for mechanism	401-219 54392-13
20	Name Plate, with screws, for mechanism	401-220 54392-13
21	Bracket, as shown, for supporting counterweights and contact group	53063-8
22	Screw, No. 10-32 x 7/8" hex. hd., with hex. nut and lock washer, for mounting contact group	18683-1 577-18 53029-3

(*Continued on following page*)

January 1941 GENERAL RAILWAY SIGNAL COMPANY

Type SA Direct-Current Signal Mechanism

With Stepped Lens, Slide Arrangement and Articulated Contacts

Drawing references are shown for convenience in checking shipping lists and invoices.

Fig. No.	Name	Drawing Reference
	Order by plate, figure number and name	
23	Incandescent Lamp, 2 pin, candelabra single contact bayonet base S-8 bulb, single filament, 1000 hour rating, 11.3 volts, 13.3 watts, recommended for operation on 10 volts	34866–32
23a	as above, except S-11 bulb, single filament, 1000 hour rating, 8 volts, 10 watts, recommended for operation on 7.2 volts	34866–43
23b	same as Fig. 23 except S-11 bulb, major and minor filaments in multiple, 1000 hour rating, 8 volts, 13+3.5 watts, recommended for operation on 7.2 volts	34866–37
23c	same as Fig. 23, except S-11 bulb, single filament, 1000 hour rating, 9 volts, 15.3 watts, recommended for operation on 8 volts	34866–34
23d	same as Fig. 23, except S-11 bulb, major and minor filaments in multiple, 1000 hour rating, 10 volts, 13+3.5 watts, recommended for operation on 9 volts	34866–60
23e	same as Fig. 23, except S-11 bulb, single filament, 1000 hour rating, 10 volts, 25 watts, recommended for operation on 9 volts	34866–47
23f	same as Fig. 23, except S-11 bulb, single filament, 2000 hour rating, 13.5 volts, 17 watts, recommended for operation on 12 volts	34866–25
23g	same as Fig. 23, except G-16½ bulb, single filament, 1000 hour rating, 115 volts, 25 watts, recommended for operation on 110 volts	34866–45
24	Reflector, glass, as shown	53122
25	Retaining Ring, for reflector	45647–5
26	Screw, No. 4–36 x ¼″ fl. hd., for fastening retainer to holder	35699–2
27	Spring, with sleeve, for fastening glass Fig. 29 in case	51107–3 15284–17
28	Gasket, rubber, for use between glass and case	52983–1
29	Glass, for reflector unit compartment	924–11
30	Gasket, rubber, for use with glass Fig. 32	52983–3

(Continued on following page)

GENERAL RAILWAY SIGNAL COMPANY January 1941

Type SA Direct-Current Signal Mechanism

With Stepped Lens, Slide Arrangement and Articulated Contacts

Drawing references are shown for convenience in checking shipping lists and invoices.

Fig. No.	Name	Drawing Reference
	Order by plate, figure number and name	
31	Spring, with sleeve, for fastening glass in case	51107-6 15284-17
32	Outer cover glass, for use in position shown	924-17
33	Line Coil, 500 ohms resistance, for 12 volt operation. Includes bakelite shell	53121-1 Gr. 2
34	Bearing, upper half, for armature shaft	53828
35	Ball, for use at ends of armature shaft	36126-4
36	Gasket, for use between glass case and mechanism case	13014-126
37	Shim, .005″ th. for use between upper and lower halves of armature shaft bearings	53879
37a	as above, except .003″ th.	53879-1
38	Bearing, knife edge, for armature shaft	53828-1
39	Bearing Bracket, for supporting one end of armature shaft	53064-2
40	Washer, for use between bearing bracket and poles	53097
41	Glass Case, for housing lower half of mechanism	37380-8
42	Color Disc Complete, red, A.A.R. Standard, assembled in retaining cup	53073 Gr. 2
42a	as above, except yellow with one side depolished, A.A.R. Standard	53073 Gr. 12
42b	same as Fig. 42, except green, pre-cracked, A.A.R. Standard	53073 Gr. 3
42c	same as Fig. 42, except purple, A.A.R. Standard	53073 Gr. 7
43	Nut, No. 10-32 x 1/8″ th. hex. for stud Fig. 46, also for lamp receptacle	40796
44	Screw, 1/4″-20 x 7/8″ lg., for fastening brackets Fig. 18 and 39 to case, four required	45048-8
45	Screw, No. 8-32″ x 13/32″ collar hd., for fastening bearing to brackets	53829-2
46	Stud, as shown, for fastening poles to brackets, four required	441-117
47	Stud, 7/16″ dia. x 5 3/8″ lg., for fastening magnet to poles	879-31
48	Nut, 7/16″-14 hex., for stud, Fig. 47	54247

(Continued on following page)

January 1941 GENERAL RAILWAY SIGNAL COMPANY

Type SA Direct-Current Signal Mechanism

With Stepped Lens, Slide Arrangement and Articulated Contacts

Drawing references are shown for convenience in checking shipping lists and invoices.

Fig. No.	Name	Drawing Reference
	Order by plate, figure number and name	
49	Leather Washer, for use between glass case and stirrup on mechanism case	4553
50	Pole, right hand, used in position shown	53087–1
51	Magnet Complete, as shown, includes spacers and holders	54419 Gr. 1
52	Pole, left hand, used in position shown	53087–2
53	Sleeve, for springs Figs. 27 and 31	15284–17
54	Screw, No. 14–24 x 1½″ sq. hd., used as terminal post	350–3
55	Nut, No. 14–24 hex., for terminal posts	42843–1
56	Washer, for terminal posts	1225–2
57	Nut, No. 14–24 x 3/16″ th. hex., for terminal posts	42839–5
58	Block, only, for terminal block	47508–79
59	Screw, No. 8–32 x 3/8″ rd. hd., used as terminal post for fingers	2553–11
60	Contact Complete, as shown, two required	56131 Gr. 2
61	Contact Complete, as shown, left hand	56132 Gr. 2
62	Contact Complete, as shown, two required	56131 Gr. 1
63	Nut, 1/8″–56 x 1/8″ th. hex., for screw Fig. 64	12680–5
64	Screw, 1/8″–56, special, for contacts	53019–6
65	Nut, 1/8″–56 x 1/8″ th. hex., for screw Fig. 64	12680–13
66	Retaining Plate Complete, for contacts	56134 Gr. 1
67	Mounting Block, for contacts	56135
68	Tubing, black, 2mm dia., 2 3/8″ lg. for wires	52316–26
69	Tubing, black 2mm dia., 2¾″ lg. for wires	52316–27
70	Nut, No. 8–32 x 1/8″ th. hex., for screw Fig. 72	28948–1
71	Lock Washer, for nut Fig. 70	53029–4
72	Screw, No. 8–32 x 5/8″ sq. hd., for mounting contacts	23034–2
73	Spring, for centering contacts	586–98
74	Contact Complete, as shown, right hand	56132 Gr. 1

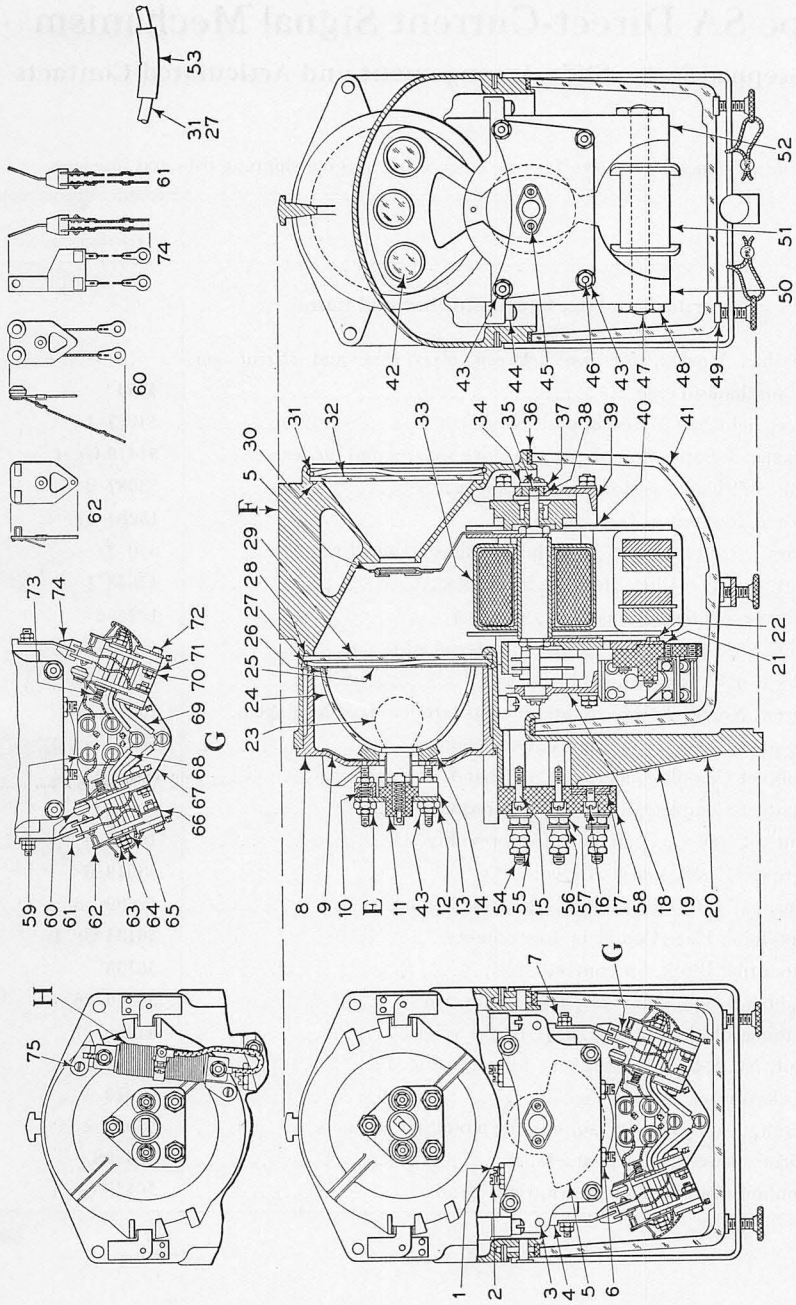

A—For 4 Volt Operation C—For 10 Volt Operation
B—For 7.5–8 Volt Operation D—For 12 Volt Operation
Type SA Direct-Current Signal Mechanism

January 1941 GENERAL RAILWAY SIGNAL COMPANY

Type SA Direct-Current Signal Mechanism

With Stepped Lens, Slide Arrangement and Articulated Contacts

Note: Mechanisms shown on this plate may be used in either high or dwarf signals.

If other color combinations than those listed are desired or if signals are to operate on voltages other than those listed, same will be furnished when specified.

This mechanism is equipped with eight independent contacts, that is, duplicate sets of independent front and back articulated contacts for both green and yellow positions.

Lamps Fig. 23 are not included with mechanisms complete and must be ordered separately.

For other direct-current mechanisms see Plate H2649 to H2653.

Drawing references are shown for convenience in checking shipping lists and invoices.

Fig. No.	Name	Drawing Reference
	Order by plate, figure number and name	
A	Type SA Direct-Current Signal Mechanism Complete, as shown, equipped with cover glass Fig. 32, for use with stepped lens signals. For 4 volt operation, arranged to give three indications, namely: green, red and yellow	
A1	as above, except with 1 ohm resistor, Fig. H	53052–40 Gr. 43
A2	same as Fig. A, except with 5 ohm resistor, Fig. H1	53052–41 Gr. 43
B	Type SA Direct-Current Signal Mechanism Complete, equipped with cover glass Fig. 32, for use with stepped lens signals. For 7.5–8 volt operation, arranged to give three indications, namely: green, red and yellow	
B1	as above, except with 1 ohm resistor, Fig. H	53052–40 Gr. 1
B2	same as Fig. B, except with 5 ohm resistor, Fig. H1	53052–41 Gr. 1
C	Type SA Direct-Current Signal Mechanism Complete, equipped with cover glass Fig. 32, for use with stepped lens signals. For 10 volt operation, arranged to give three indications, namely: green, red and yellow	
C1	as above, except with 1 ohm resistor, Fig. H	53052–40 Gr. 29
C2	same as Fig. C, except with 5 ohm resistor, Fig. H1	53052–41 Gr. 29
D	Type SA Direct-Current Signal Mechanism Complete, equipped with cover glass Fig. 32, for use with stepped lens signals. For 12 volt operation, arranged to give three indications, namely: green, red and yellow	

(Continued on following page)

GENERAL RAILWAY SIGNAL COMPANY January 1941

Type SA Direct-Current Signal Mechanism

With Stepped Lens, Slide Arrangement and Articulated Contacts

Drawing references are shown for convenience in checking shipping lists and invoices.

Fig. No.	Name	Drawing Reference
	Order by plate, figure number and name	
D1	as above, except with 1 ohm resistor, Fig. H	53052–40 Gr. 15
D2	same as Fig. D, except with 5 ohm resistor, Fig. H1	53052–41 Gr. 15
E	Reflector Unit Complete, comprises parts Figs. 8 to 14, and 24 to 26, inclusive. Does not include lamp Fig. 23 which must be ordered separately	53056–1 Gr. 1
F	Case Complete, includes all parts for housing mechanism. Does not include reflector unit, terminal block, glass Fig. 32 or glass case Fig. 41	53270–1 Gr. 3
G	Contact Group Complete, as shown	56130 Gr. 2
H	Resistance Unit Complete, 1 ohm, 2.5 amps., with mounting screws	55945–1 Gr. 3
H1	as above, except 5 ohm, 1 amp	55945–1 Gr. 1
1	Screw, No. 14–40 x 5/8″ lg., headless, used as stop for counterweight	5100–10
2	Screw, No. 14–40 x 7/8″ lg., headless, used as stop for armature	5100–6
3	Pin, .125″ dia. x 7/8″ lg., for counterweight	2644–5
4	Counterweight Complete, for mechanism	53703–1 Gr. 1
5	Armature Complete, with miniature roundels, for three indication unit, giving green, red and yellow indications. Includes spectacles, fly wheel, vane and all riveted parts mounted on shaft	53055–8 Gr. 1
5a	as above, except for two indication unit giving purple and yellow indications	53055–8 Gr. 2
5b	same as Fig. 5, except for two indication unit giving red and yellow indications	53055–8 Gr. 3
6	Nut, No. 14–40 x 1/8″ th. hex., for screws, Figs. 1 and 2	53084–1
7	Nut, No. 8–32 x 1/8″ th. hex., for fastening fingers to counterweight	3891–1
8	Holder, for reflector unit Fig. E, includes studs for mounting receptacle riveted in place	53068–2 441–120
9	Washer, for use between pad and holder, for reflector	590–25
10	Spring, for receptacle	586–32

(Continued on following page)

January 1941 GENERAL RAILWAY SIGNAL COMPANY

Type SA Direct-Current Signal Mechanism

With Stepped Lens, Slide Arrangement and Articulated Contacts

Drawing references are shown for convenience in checking shipping lists and invoices.

Fig. No.	Name	Drawing Reference
	Order by plate, figure number and name	
11	Lamp Receptacle Complete, for details and order references see Plate H2669	53058-5 Gr. 2
12	Nut, No. 10-32 hex., for stud on holder	46277-1
13	Nut, No. 10-32 cup shape, for spring	20673-2
14	Washer, for use behind reflector	1533-32
15	Screw, No. 10-32 x 3/4" fil. hd., for fastening terminal block to case for use in position shown	12563-5
16	Screw, No. 10-32 x 3/8" fil. hd., for fastening terminal block to plate Fig. 17	12563-22
17	Plate, for mounting terminal block	55378-4
18	Bearing Bracket, as shown, for supporting one end of armature shaft	53063-6
19	Name Plate, with screws, for mechanism	401-272 54392-13
20	Name Plate, with screws, for mechanism	401-220 54392-13
21	Bracket, as shown, for supporting counterweights and contact group	53063-8
22	Screw, No. 10-32 x 7/8" hex. hd., with hex. nut and lock washer, for mounting contact group	18683-1 577-18 53029-3
23	Incandescent Lamp, 2 pin, candelabra single contact bayonet base S-8 bulb, single filament, 1000 hour rating, 11.3 volts, 13.3 watts, recommended for operation on 10 volts	34866-32
23a	as above, except S-11 bulb, single filament, 1000 hour rating, 8 volts, 10 watts, recommended for operation on 7.2 volts	34866-43
23b	same as Fig. 23, except S-11 bulb, major and minor filaments in multiple, 1000 hour rating, 8 volts, 13+3.5 watts, recommended for operation on 7.2 volts	34866-37

(Continued on following page)

GENERAL RAILWAY SIGNAL COMPANY January 1941

Type SA Direct-Current Signal Mechanism

With Stepped Lens, Slide Arrangement and Articulated Contacts

Drawing references are shown for convenience in checking shipping lists and invoices.

Fig. No	Name	Drawing Reference
	Order by plate, figure number and name	
23c	same as Fig. 23, except S-11 bulb, single filament, 1000 hour rating, 9 volts, 15.3 watts, recommended for operation on 8 volts..	34866-34
23d	same as Fig. 23, except S-11 bulb, major and minor filaments in multiple, 1000 hour rating, 10 volts, 13+3.5 watts, recommended for operation on 9 volts.....	34866-60
23e	same as Fig. 23, except S-11 bulb, single filament, 1000 hour rating, 10 volts, 25 watts, recommended for operation on 9 volts..	34866-47
23f	same as Fig. 23, except S-11 bulb, single filament, 2000 hour rating, 13.5 volts, 17 watts, recommended for operation on 12 volts	34866-25
23g	same as Fig. 23, except G-16½ bulb, single filament, 1000 hour rating, 115 volts, 25 watts, recommended for operation on 110 volts.....	34866-45
24	Reflector, glass, as shown.....	53122
25	Retaining Ring, for reflector.....	45647-5
26	Screw, No. 4-36 x ¼″ fl. hd., for fastening retainer to holder.....	35699-2
27	Spring, with sleeve, for fastening glass, Fig. 29, in case.....	51107-3 15284-17
28	Gasket, rubber, for use between glass and case.....	52983-1
29	Glass, for reflector unit compartment.....	924-11
30	Gasket, rubber, for use with glass, Fig. 32.....	52983-3
31	Spring, with sleeve, for fastening glass in case.....	51107-6 15284-17
32	Outer cover glass, for use in position shown.....	924-17
33	Line Coil, 105 ohm resistance, for 4 volt operation. Includes bakelite shell.....	53121-1 Gr.
33a	as above, except 250 ohms resistance for 7.5 to 8 volt operation..	53121-1 Gr.
33b	same as Fig. 33, except 380 ohms resistance, for 10 volt operation	53121-1 Gr. 11
33c	same as Fig. 33, except 500 ohms resistance, for 12 volt operation	53121-1 Gr. 2
34	Bearing, upper half, for armature shaft.....	53828

(Continued on following page)

January 1941 GENERAL RAILWAY SIGNAL COMPANY

Type SA Direct-Current Signal Mechanism

With Stepped Lens, Slide Arrangement and Articulated Contacts

Drawing references are shown for convenience in checking shipping lists and invoices.

Fig. No.	Name	Drawing Reference
	Order by plate, figure number and name	
35	Ball, for use at ends of armature shaft	36126-4
36	Gasket, for use between glass case and mechanism case	13014-126
37	Shim, .005″ th. for use between upper and lower halves of armature shaft bearings	53879
37a	as above, except .003″ th	53879-1
38	Bearing, knife edge, for armature shaft	53828-1
39	Bearing Bracket, for supporting one end of armature shaft	53064-2
40	Washer, for use between bearing bracket and poles	53097
41	Glass Case, for housing lower half of mechanism	37380-8
42	Color Disc Complete, red, A.A.R. Standard, assembled in retaining cup	53073 Gr. 2
42a	as above, except yellow with one side depolished, A.A.R. Standard	53073 Gr. 12
42b	same as Fig. 42, except green, pre-cracked, A.A.R. Standard	53073 Gr. 3
42c	same as Fig. 42, except purple, A.A.R. Standard	53073 Gr. 7
43	Nut, No. 10-32 x 1/8″ th. hex., for stud Fig. 46, also for lamp receptacle	40796
44	Screw, 1/4″-20 x 7/8″ lg., for fastening brackets Fig. 18 and 39 to case, four required	45048-8
45	Screw, No. 8-32 x 13/32″ collar hd., for fastening bearing to brackets	53829-2
46	Stud, as shown, for fastening poles to brackets, four required	441-117
47	Stud, 7/16″ dia. x 5 3/8″ lg., for fastening magnet to poles	879-31
48	Nut, 7/16″-14 hex., for stud, Fig. 47	54247
49	Leather Washer, for use between glass case and stirrup on mechanism case	4553
50	Pole, right hand, used in position shown	53087-1
51	Magnet Complete, as shown, includes spacers and holders	54419 Gr. 1
52	Pole, left hand, used in position shown	53087-2
53	Sleeve, for springs, Figs. 27 and 31	15284-17
54	Screw, No. 14-24 x 1 1/2″ sq. hd., used as terminal post	350-3

(Continued on following page)

GENERAL RAILWAY SIGNAL COMPANY January 1941

Type SA Direct-Current Signal Mechanism

With Stepped Lens, Slide Arrangement and Articulated Contacts

Drawing references are shown for convenience in checking shipping lists and invoices.

Fig. No.	Name	Drawing Reference
	Order by plate, figure number and name	
55	Nut, No. 14–24 hex., for terminal posts	42843–1
56	Washer, for terminal posts	1225–2
57	Nut, No. 14–24 x 3/16″ th. hex., for terminal posts	42839–5
58	Block, only, for terminal block	47508–79
59	Screw, No. 8–32 x 3/8″ rd. hd., used as terminal post for fingers	2553–11
60	Contact Complete, as shown, two required	56131 Gr. 2
61	Contact Complete, as shown, left hand	56132 Gr. 2
62	Contact Complete, as shown, two required	56131 Gr. 1
63	Nut, 1/8″–56 x 1/8″ th. hex., for screw Fig. 64	12680–5
64	Screw, 1/8″–56, special, for contacts	53019–6
65	Nut, 1/8″–56 x 1/8″ th. hex., for screw Fig. 64	12680–13
66	Retaining Plate Complete, for contacts	56134 Gr. 1
67	Mounting Block, for contacts	56135
68	Tubing, black, 2mm dia., 2 3/8″ lg., for wires	52316–26
69	Tubing, black, 2mm dia., 2 3/4″ lg., for wires	52316–27
70	Nut, No. 8–32 x 1/8″ th. hex., for screw Fig. 72	28948–1
71	Lock Washer, for nut Fig. 70	53029–4
72	Screw, No. 8–32 x 5/8″ sq. hd., for mounting contacts	23034–2
73	Spring, for centering contacts	586–98
74	Contact Complete, as shown, right hand	56132 Gr. 1
75	Screw, No. 8–32 x 5/16″ rd. hd., with lock washer, for fastening resistance unit, Fig. H to holder, Fig. 8	2553–9 53029–4

Memoranda

PLATE H2661

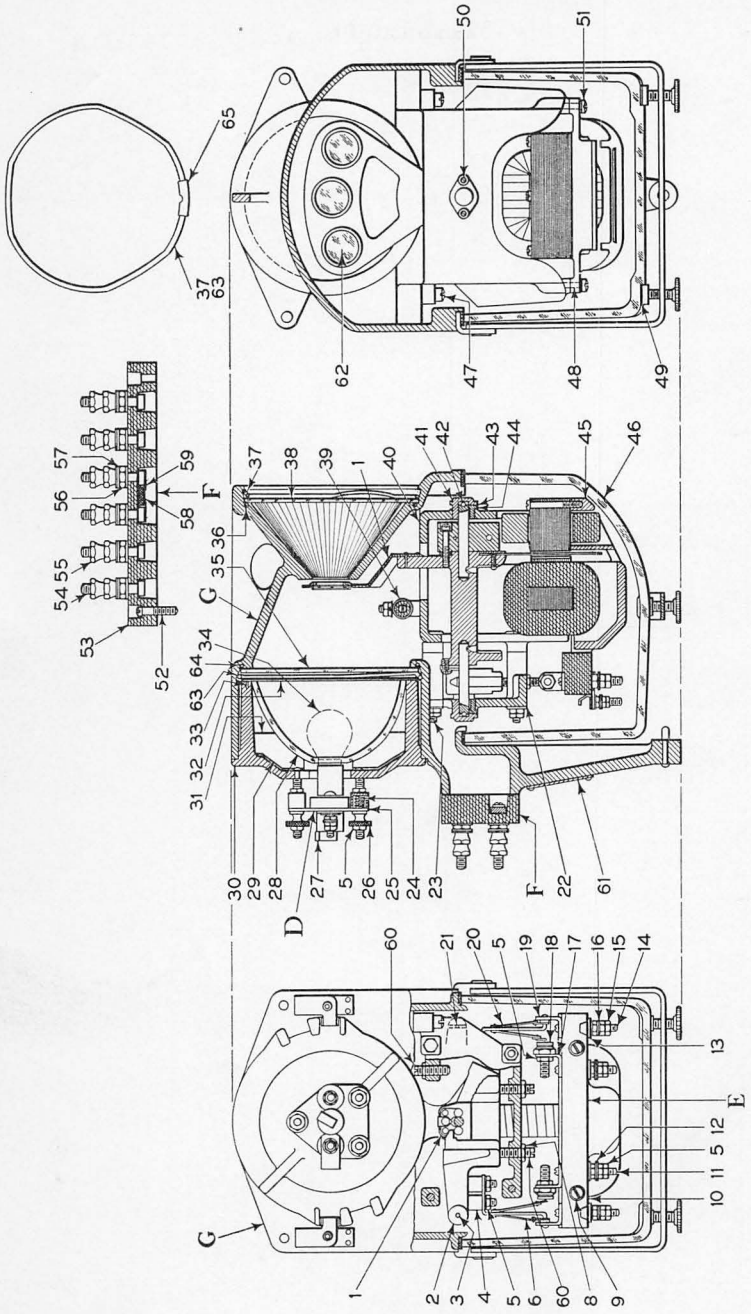

Type SA Alternating-Current Signal Mechanism
For Repair Parts Only

Type SA Alternating-Current Signal Mechanism

For Repair Parts Only

Note: This plate is included for ordering repair parts only for mechanism, Drawing No. 53052–5.

For latest alternating-current mechanism see Plate H2663.

Drawing references are shown for convenience in checking shipping lists and invoices.

Fig. No.	Name	Drawing Reference
	Order by plate, figure number and name	
D	Reflector Unit Complete, comprises parts Figs. 24 to 33 inclusive. Does not include lamp Fig. 34 which must be ordered separately	53056 Gr. 3
E	Contact Block Complete, as shown. Comprises parts Figs. 10 to 19 inclusive	53053 Gr. 3 12563–9
F	Terminal Block Complete, as shown. Comprises parts Figs. 52 to 59 inclusive	53060 Gr. 3 12563–5
G	Case Complete, includes all parts for housing mechanism. Does not include reflector unit, terminal board, glass Fig. 38 or glass case Fig. 46	53270 Gr. 1
1	Armature Complete, with miniature roundels, for three indication unit, giving green, red and yellow indications. Includes spectacles, vane and all riveted parts mounted on shaft	53055–5 Gr. 1
1a	as above, except for two indication unit giving red and yellow indications	53055–5 Gr. 3
1b	same as Fig. 1, except for two indication unit, giving green and red indications	53055–5 Gr. 4
1c	same as Fig. 1, except for two indication unit giving purple and yellow indications	53055–5 Gr. 2
2	Counterweight Complete, for mechanism	53703 Gr. 1
3	Pin, $\frac{1}{8}$″ x $1\frac{1}{4}$″, hinge for counterweight	504–140
4	Insulator Complete, for contact fingers. Includes stud for attaching to counterweight	42792
5	Nut, No. 10–32 x $\frac{3}{8}$″ th. hex., for stud on insulators, also for contacts, terminal posts and studs for supporting brackets	40796

(Continued on following page)

GENERAL RAILWAY SIGNAL COMPANY January 1941

Type SA Alternating-Current Signal Mechanism

For Repair Parts Only

Drawing references are shown for convenience in checking shipping lists and invoices.

Fig. No.	Name	Drawing Reference
	Order by plate, figure number and name	
6	Contact Finger Complete, as shown, one required	53059 Gr. 6
8	Nut, No. 14-40 hex., for screws, Fig. 60	53084-1
9	Screw, No. 10-32 x 7/8", fil. hd., for fastening contact block to pole piece	12563-9
10	Contact Block, only, for Fig. E	47508-45
11	Screw, No. 10-32 x 1½" rd. hd., terminal post for contact block	2438-24
12	Washer, for terminal post, Fig. 11	40791
13	Insulator, for terminal posts on contact block	53109
14	Screw, No. 8-32 x ¾", rd. hd., used as terminal post	2553-19
15	Nut, No. 8-32, hex., for terminal post, Fig. 14	3891-1
16	Washer, for terminal post, Fig. 14	2534-1
17	Terminal, for front contact	51559-11
18	Front Contact Complete, as shown	42799-7 Gr. 8
19	Back Contact Complete, as shown, two required	13061-52 Gr. 1
20	Contact Finger Complete, as shown, one required	53059 Gr. 5
21	Pin 1/16" x 9/16", for fastening counterweight hinge pin in bracket Fig. 22	12682
22	Bearing Bracket, as shown, for supporting one end of armature shaft and counterweight	53063-2
23	Stud, as shown, for mounting bearing bracket	49476-24
24	Spring, as shown, for receptacle	586-32
25	Nut, No. 10-32, hex., cup shape, for spring	20673-2
26	Knurled Nut, No. 10-32, for lamp receptacle	13076-1
27	Lamp Receptacle Complete, for details and order references see Plate H2669	53058-5 Gr. 2
28	Reflector, glass, as shown	53122
29	Washer, for use between pad and holder, for reflector	590-25

(Continued on following page)

January 1941 GENERAL RAILWAY SIGNAL COMPANY

Type SA Alternating-Current Signal Mechanism

For Repair Parts Only

Drawing references are shown for convenience in checking shipping lists and invoices.

Fig. No.	Name	Drawing Reference
	Order by plate, figure number and name	
30	Holder, for reflector unit Fig. D, includes studs for mounting receptacle	53068-1 441-120
31	Pad, for use behind reflector	1533-32
32	Retaining Ring, for reflector	45647-5
33	Screw, No. 4-36 x 3/16", rd. hd., for fastening retaining ring to holder	35699-2
34	Incandescent Lamp, 2 pin candelabra single contact bayonet base, S-8 bulb, single filament, 1000 hour rating, 11.3 volts, 13.3 watts, recommended for operation on 10 volts	34866-32
34a	as above, except S-11 bulb, single filament, 1000 hour rating, 8 volts, 10 watts, recommended for operation on 7.2 volts	34866-43
34b	same as Fig. 34, except S-11 bulb, major and minor filaments in multiple, 1000 hour rating, 8 volts, 13+3.5 watts, recommended for operation on 7.2 volts	34866-37
34c	same as Fig. 34, except S-11 bulb, single filament, 1000 hour rating, 9 volts, 15.3 watts, recommended for operation on 8 volts	34866-34
34d	same as Fig. 34, except S-11 bulb, major and minor filaments in multiple, 1000 hour rating, 10 volts, 13+3.5 watts, recommended for operation on 9 volts	34866-60
34e	same as Fig. 34, except S-11 bulb, single filament, 1000 hour rating, 10 volts, 25 watts, recommended for operation on 9 volts	34866-47
34f	same as Fig. 34, except S-11 bulb, single filament, 2000 hour rating, 13.5 volts, 17 watts, recommended for operation on 12 volts	34866-25
34g	same as Fig. 34, except G-16½ bulb, single filament, 1000 hour rating, 115 volts, 25 watts, recommended for operation on 110 volts	34866-45

(Continued on following page)

GENERAL RAILWAY SIGNAL COMPANY January 1941

Type SA Alternating-Current Signal Mechanism

For Repair Parts Only

Drawing references are shown for convenience in checking shipping lists and invoices.

Fig. No.	Name	Drawing Reference
	Order by plate, figure number and name	
34h	same as Fig. 34, except S-11 bulb, single filament, 1000 hour rating, 4 volts, 3 watts, recommended for compound lens signal only, for operation on 4 volts	34866–35
34j	same as Fig. 34, except S-11 bulb, single filament, 1000 hour rating, 8 volts, 5 watts, recommended for compound lens signals only, for operation on 8 volts	34866–55
34k	same as Fig. 34, except S-11 bulb, major and minor filaments in multiple, 1000 hour rating, 8 volts, 5+3.5 watts, recommended for compound lens signals only, for operation on 8 volts	34866–58
34m	same as Fig. 34, except S-11 bulb, single filament, 1000 hour rating, 10 volts, 5 watts, recommended for compound lens signal only, for operation on 10 volts	34866–38
35	Glass, for reflector unit compartment	924–11
36	Gasket, rubber, for use with glass Fig. 38	52983–3
37	Spring, with sleeve, for fastening glass in case	51107–6 15284–17
38	Outer Cover Glass, for use in position shown	924–17
39	Resistor Complete, as shown	31160–1 Gr. 1
40	Bracket, for supporting one end of armature shaft	53063–3
41	Bearing, upper half, as shown, for armature shaft. Two required	53828
42	Ball, for use at ends of armature shaft	36126–4
43	Shim, .005″ th., for use between upper and lower halves of armature shaft bearing	53879
43a	as above, except .003″ thick	53879–1
44	Bearing, lower half, knife-edge, for armature shaft	53828–1
45	Support Complete, as shown, for mounting coil	53129 Gr. 4
46	Glass Cover, for housing lower half of mechanism	37380–8
47	Screw, ¼″–20 x ⅞″ fil. hd., for fastening bearing bracket to case	45048–8

(Continued on following page)

Type SA Alternating-Current Signal Mechanism

For Repair Parts Only

Drawing references are shown for convenience in checking shipping lists and invoices.

Fig. No.	Name	Drawing Reference
	Order by plate, figure number and name	
48	Dowel Pin, .128″ x 1/2″ long, for fastening support to bracket	504–103
49	Washer, leather, for use between glass cover and stirrup on case Fig. G	4553
50	Screw, No. 8–32 x 13/32″ collar hd., for fastening bearing to bracket	53829–2
51	Screw, No. 10–32 x 1/2″ fil. hd., for fastening bracket to support	12563
52	Screw, No. 10–32 x 3/4″ fil. hd., for mounting terminal block, Fig. F	12563–5
53	Block, only, for terminal block Fig. F	47508–66
54	Screw, No. 14–24 x 1 1/2″ sq. hd., used as terminal post	350–3
55	Nut, No. 14–24 hex., for terminal post	42843–1
56	Nut, No. 14–24 x 3/16″ hex., for terminal post	42839–1
57	Washer, for terminal post	1225–2
58	Carborundum Plate, used as lightning protection between terminals of control windings	41786–2
59	Connector, for carborundum plate Fig. 58	4906–40
60	Screw, No. 14–40 x 5/8″ headless, used as stop for vane and counterweight	5100–10
61	Name Plate, with escutcheon pins, for mechanism	401–149 40797
62	Color Disc Complete, red, A.A.R. Standard, assembled in retaining cup	53073 Gr. 2
62a	as above, except yellow with one side depolished, A.A.R. Standard	53073 Gr. 12
62b	same as Fig. 62, except green, pre-cracked, A.A.R. Standard	53073 Gr. 3
62c	same as Fig. 62, except purple, A.A.R. Standard	53073 Gr. 7
63	Spring, with sleeve, for fastening glass Fig. 35 in case	51107–3 15284–17
64	Gasket, rubber, for use between glass and case	52983–1
65	Sleeve, for springs Figs. 37 and 63	15284–17

PLATE H2663

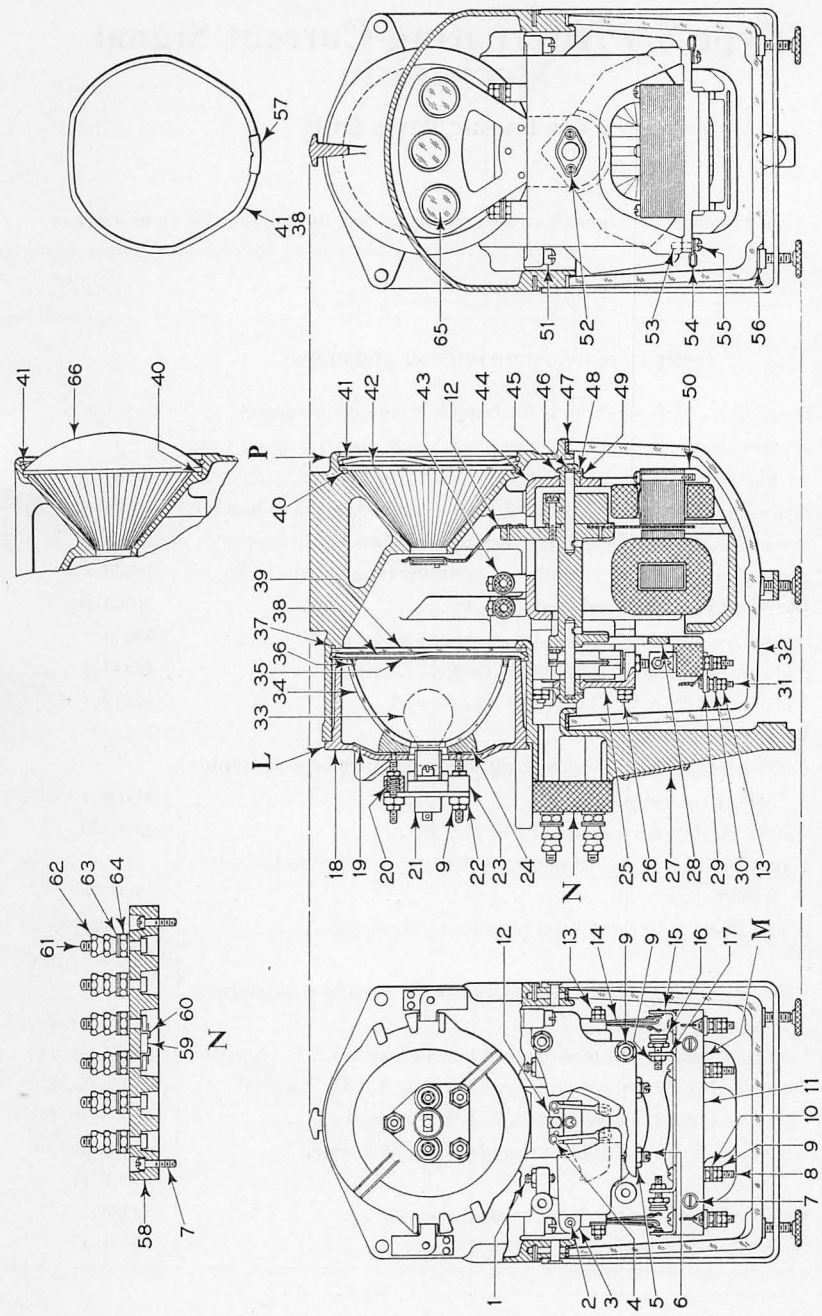
For Stepped Lens Signal
For Compound Lens Signal
A–B–C–D–E
F–G–H–J–K
Type SA Alternating-Current Signal Mechanism

January 1941 GENERAL RAILWAY SIGNAL COMPANY

Type SA Alternating-Current Signal Mechanism

With Stepped or Compound Lenses and Slide Arrangement

Note: Mechanisms shown on this plate may be used in either high or dwarf signals.

If other color combinations than those listed are desired or if signals are to operate on voltages other than those listed, same will be furnished when specified.

Lamp Fig. 33 is not included with mechanisms complete and must be ordered separately.

This mechanism may be equipped with plug coupler and resistance unit as shown on Plate H2651 if required.

For other alternating-current mechanism see Plate H2661.

Drawing references are shown for convenience in checking shipping lists and invoices.

Fig. No.	Name	Drawing Reference
	Order by plate, figure number and name	
A	Type SA Alternating-Current Signal Mechanism Complete, as shown, equipped with cover glass, Fig. 42, for use with stepped lens signals. For 110 volt, line and local, 50 or 60 cycle operation, arranged to give three indications, namely: green, red and yellow	53052–10 Gr. 43
B	Type SA Alternating-Current Signal Mechanism Complete, as shown, equipped with cover glass Fig. 42, for use with stepped lens signals. For 110 volt line, 11 volt local, 60 cycle or 110 volt line, 9 volt local, 50 cycle operation, arranged to give three indications, namely: green, red and yellow	53052–10 Gr. 15
C	Type SA Alternating-Current Signal Mechanism Complete, as shown, equipped with cover glass Fig. 42, for use with stepped lens signals. For 55 volt line and local, 25 cycle operation. Arranged to give three indications, namely: green, red and yellow	53052–10 Gr. 57
D	Type SA Alternating-Current Signal Mechanism Complete, as shown, equipped with cover glass Fig. 42, for use with stepped lens signals. For 55 volt line and 12.5 volt local, 25 cycle operation, arranged to give three indications, namely: green, red and yellow	53052–10 Gr. 29

(Continued on following page)

GENERAL RAILWAY SIGNAL COMPANY January 1941

Type SA Alternating-Current Signal Mechanism

With Stepped or Compound Lenses and Slide Arrangement

Drawing references are shown for convenience in checking shipping lists and invoices.

Fig. No.	Name	Drawing Reference
	Order by plate, figure number and name	
E	Type SA Alternating-Current Signal Mechanism Complete, as shown, equipped with cover glass Fig. 42, for use with stepped lens signals. For 16.5 volt line, 14.2 volt local, 60 cycle or 15 volt line 12.5 volt local, 25 cycle operation, arranged to give three indications, namely: green, red and yellow.....	53052–10 Gr. 1
F	Type SA Alternating-Current Signal Mechanism Complete, equipped with lens Fig. 66 for use with compound lens signals. For 110 volt, line and local, 50 or 60 cycle operation, arranged to give three indications, namely: green, red and yellow.....	
G	Type SA Alternating-Current Signal Mechanism Complete, equipped with lens Fig. 66 for use with compound lens signals. For 110 volt line, 11 volt local, 60 cycle or 110 volt line, 9 volt local, 50 cycle operation, arranged to give three indications, namely: green, red and yellow.....	
H	Type SA Alternating-Current Signal Mechanism Complete, equipped with lens Fig. 66 for use with compound lens signals. For 55 volt line and local, 25 cycle operation, arranged to give three indications, namely: green, red and yellow.....	
J	Type SA Alternating-Current Signal Mechanism Complete, equipped with lens Fig. 66 for use with compound lens signals. For 55 volt line and 12.5 volt local, 25 cycle operation, arranged to give three indications, namely: green, red and yellow.....	
K	Type SA Alternating-Current Signal Mechanism Complete, equipped with lens Fig. 66 for use with compound lens signals. For 16.5 volt line, 14.2 volt local, 60 cycle or 15 volt line, 12.5 volt local, 25 cycle operation, arranged to give three indications, namely: green, red and yellow.....	

(*Continued on following page*)

January 1941 GENERAL RAILWAY SIGNAL COMPANY

Type SA Alternating-Current Signal Mechanism

With Stepped or Compound Lenses and Slide Arrangement

Drawing references are shown for convenience in checking shipping lists and invoices.

Fig. No.	Name	Drawing Reference
	Order by plate, figure number and name	
L	Reflector Unit Complete, comprises parts Figs. 9, 18 to 24 and 34 to 36 inclusive. Does not include lamp Fig. 33 which must be ordered separately	53056–1 Gr. 1
M	Contact Block Complete, as shown, comprises parts Figs. 8, 9, 10, 11, 13, 15, 16, 17, 29, 30 and 31	53053 Gr. 8
N	Terminal Block Complete, as shown, comprises parts Figs. 7 and 58 to 64	53060 Gr. 3
P	Case Complete, includes all parts for housing mechanism. Does not include reflector unit, terminal block, glass Fig. 42 or glass case, Fig. 32	53270–1 Gr. 3
1	Front Stop Complete, includes hex. nut, for vane and counterweight	55620 Gr. 1
2	Pin, .125″ dia. x 7/8″ lg., for hinging counterweight to brack	2644–5
3	Counterweight Complete, includes link and hinge pin	53703–1 Gr. 2
4	Pin, for counterweight	730–45
5	Nut, No. 14–40 x 1/8″ hex., for screw Fig. 6	53084–1
6	Screw, No. 14–40 x 5/8″ headless, used as stop for vane and counterweight	5100–10
7	Screw, No. 10–32 x 3/4″ fil. hd., for fastening contact block to bracket	12563–5
8	Screw, No. 10–32 x 1 1/2″ rd. hd., terminal post for contact block	2438–24
9	Nut, No. 10–32 x 1/8″ hex., for terminal posts and contacts also for stud on receptacle	40796
10	Washer, for terminal posts	40791
11	Terminal Block, only	47508–49
12	Armature Complete, with miniature roundels, for three indication unit, giving green, red and yellow indications. Includes spectacles, vane and all riveted parts mounted on shaft	53055–5 Gr. 1

(Continued on following page)

GENERAL RAILWAY SIGNAL COMPANY January 1941

Type SA Alternating-Current Signal Mechanism

With Stepped or Compound Lenses and Slide Arrangement

Drawing references are shown for convenience in checking shipping lists and invoices.

Fig. No.	Name	Drawing Reference
	Order by plate, figure number and name	
12a	as above, except for two indication unit giving purple and yellow indications	53055-5 Gr. 2
12b	same as Fig. 12, except for two indication unit giving red and yellow indications	53055-5 Gr. 3
13	Nut, No. 8-32 x 1/8" hex., for fastening fingers to counterweight	3891-1
14	Contact Finger Complete, as shown, two required	53059-3 Gr. 1
15	Back Contact Complete, includes silver contact, as shown, two required	13061-52 Gr. 2
16	Contact Complete, as shown, two required	42799-7 Gr. 8
17	Terminal, for contact Fig. 16	51559-11
18	Holder, for reflector unit Fig. L, includes studs for mounting receptacle	53068-2 441-120
19	Washer, for use between pad and holder, for reflector	590-25
20	Spring, for receptacle, as shown	586-32
21	Lamp Receptacle Complete, for details and order references see Plate H2669	53058-5 Gr. 2
22	Nut, 10-32 hex., for receptacle	46277-1
23	Nut, No. 10-32, cup shape, for spring	20673-2
24	Washer, for use behind reflector	1533-32
25	Bearing Bracket, as shown, for supporting one end of armature shaft	53063-6
26	Stud, as shown, for bracket	49476-24
27	Name Plate, with screws, for mechanism	401-222 54392-13
28	Bracket, as shown, for supporting contact block and counterweights	53063-7
29	Insulation, for contact block	53109
30	Washer, for screw Fig. 31	2534-1

(Continued on following page)

January 1941 GENERAL RAILWAY SIGNAL COMPANY

Type SA Alternating-Current Signal Mechanism

With Stepped or Compound Lenses and Slide Arrangement

Drawing references are shown for convenience in checking shipping lists and invoices.

Fig. No.	Name	Drawing Reference
	Order by plate, figure number and name	
31	Screw, No. 8-32 x ¾″ rd. hd., for contact block	2553-19
32	Glass Case, for housing lower half of mechanism	37380-8
33	Incandescent Lamp, 2 pin candelabra single contact bayonet base, S-8 bulb, single filament, 1000 hour rating, 11.3 volts, 13.3 watts, recommended for operation on 10 volts	34866-32
33a	as above, except S-11 bulb, single filament, 1000 hour rating, 8 volts, 10 watts, recommended for operation on 7.2 volts	34866-43
33b	same as Fig. 33, except S-11 bulb, major and minor filaments in multiple, 1000 hour rating, 8 volts, 13+3.5 watts, recommended for operation on 7.2 volts	34866-37
33c	same as Fig. 33, except S-11 bulb, single filament, 1000 hour rating, 9 volts, 15.3 watts, recommended for operation on 8 volts	34866-34
33d	same as Fig. 33, except S-11 bulb, major and minor filaments in multiple, 1000 hour rating, 10 volts, 13+3.5 watts, recommended for operation on 9 volts	34866-60
33e	same as Fig. 33, except S-11 bulb, single filament, 1000 hour rating, 10 volts, 25 watts, recommended for operation on 9 volts	34866-47
33f	same as Fig. 33, except S-11 bulb, single filament, 2000 hour rating, 13.5 volts, 17 watts recommended for operation on 12 volts	34866-25
33g	same as Fig. 33, except G-16½ bulb, single filament, 1000 hour rating, 115 volts, 25 watts, recommended for operation on 110 volts	34866-45
33h	same as Fig. 33, except S-11 bulb, single filament, 1000 hour rating, 4 volts, 3 watts, recommended for compound lens signals only, for operation on 4 volts	34866-35
33j	same as Fig. 33, except S-11 bulb, single filament, 1000 hour rating, 8 volts, 5 watts, recommended for compound lens signals only, for operation on 8 volts	34866-55

(Continued on following page)

GENERAL RAILWAY SIGNAL COMPANY January 1941

Type SA Alternating-Current Signal Mechanism

With Stepped or Compound Lenses and Slide Arrangement

Drawing references are shown for convenience in checking shipping lists and invoices.

Fig. No.	Name	Drawing Reference
	Order by plate, figure number and name	
33k	same as Fig. 33, except S-11 bulb, major and minor filaments in multiple, 1000 hour rating, 8 volts, 5+3.5 watts, recommended for compound lens signals, for operation on 8 volts	34866-58
33m	same as Fig. 33, except S-11 bulb, single filament, 1000 hour rating, 10 volts, 5 watts, recommended for compound lens signals only, for operation on 10 volts	34866-38
34	Reflector, glass, as shown	53122
35	Retaining Ring, for reflector	45647-5
36	Screw, No. 4-36 x 1/4" fl. hd., for fastening retainer to holder	35699-2
37	Gasket, for use between glass and case	52983-1
38	Spring, with sleeve, for fastening glass in case	51107-3 15284-17
39	Glass, for reflector unit compartment	924-11
40	Gasket, rubber, for use with glass Fig. 42	52983-3
41	Spring, with sleeve, for fastening glass Fig. 42 in case	51107-6 15284-17
42	Outer Cover Glass, for use in position shown	924-17
43	Resistor Complete, 1500 ohms, includes connector, washer, nut and insulator, for 110 volt operation	31160-1 Gr. 1 42760-13 Gr. 4 40791 40796 42792-3
43a	as above, except 62 ohms, for 55 volt operation	31160-1 Gr. 2 42760-13 Gr. 4 40791 40796 42792-3

(Continued on following page)

Type SA Alternating-Current Signal Mechanism

With Stepped or Compound Lenses and Slide Arrangement

Drawing references are shown for convenience in checking shipping lists and invoices.

Fig. No.	Name	Drawing Reference
	Order by plate, figure number and name	
44	Bracket, for supporting one end of armature shaft, for use when resistor is not used	53063-3
44a	as above, except for use with resistor	53063-5
45	Bearing, upper half, for armature shaft	53828
46	Ball, for use at ends of armature shaft	36126-4
47	Gasket, for use between glass case and cover	13014-126
48	Shim, .005″ th., for use between upper and lower halves of armature shaft bearing	53879
48a	as above, except .003″ th	53879-1
49	Bearing, lower half, knife edge, for armature shaft	53828-1
50	Support, Complete, includes magnets, for mechanisms Figs. A and F	53129 Gr. 6
50a	as above, except for mechanisms Figs. B and G	53129 Gr. 3
50b	same as Fig. 50, except for mechanisms Figs. C and H	53129 Gr. 5
50c	same as Fig. 50, except for mechanisms Figs. D and J	53129 Gr. 4
50d	same as Fig. 50, except for mechanisms Figs. E and K	53129 Gr. 2
51	Screw, ¼″–20 x ⅞″ fil. hd., for fastening brackets Figs. 25 and 44 to case	45048-8
52	Screw, No. 8–32 x $^{13}/_{32}$″ collar hd., for fastening bearing to bracket	53829-2
53	Dowel Pin, .128″ x ½″ lg., for fastening support to bracket	504-103
54	Wire Clip, as shown	53114-1
55	Screw, No. 10–32 x ½″ fil. hd., for fastening bracket to support	12563
56	Leather Washer, for use between glass case and stirrup on case	4553
57	Sleeve, for springs Figs. 38 and 41	15284-17
58	Block, only, for terminal block Fig. N	47508-66
59	Carborundum Plate, used as lightning protection between terminals of control windings	41786-2
60	Connector, for carborundum plate	4906-40
61	Screw, No. 14–24 x 1½″ sq. hd., used as terminal post	350-3

(Continued on following page)

GENERAL RAILWAY SIGNAL COMPANY January 1941

Type SA Alternating-Current Signal Mechanism

With Stepped or Compound Lenses and Slide Arrangement

Drawing references are shown for convenience in checking shipping lists and invoices.

Fig. No.	Name	Drawing Reference
	Order by plate, figure number and name	
62	Nut, No. 14–24 x 5/16″ th. hex., for terminal posts	42843–1
63	Washer, for terminal posts	1225–2
64	Nut, No. 14–24 x 3/16″ th. hex., for terminal posts	42839–1
65	Color Disc Complete, red, A.A.R. Standard, assembled in retaining cup	53073 Gr. 2
65a	as above, except yellow with one side depolished, A.A.R. Standard	53073 Gr. 12
65b	same as Fig. 65, except green, pre-cracked, A.A.R. Standard	53073 Gr. 3
65c	same as Fig. 65, except purple, A.A.R. Standard	53073 Gr. 7
66	Lens, 4½″ dia., 6½″ focus, for compound lens signals	54249–3

Memoranda

PLATE H2669

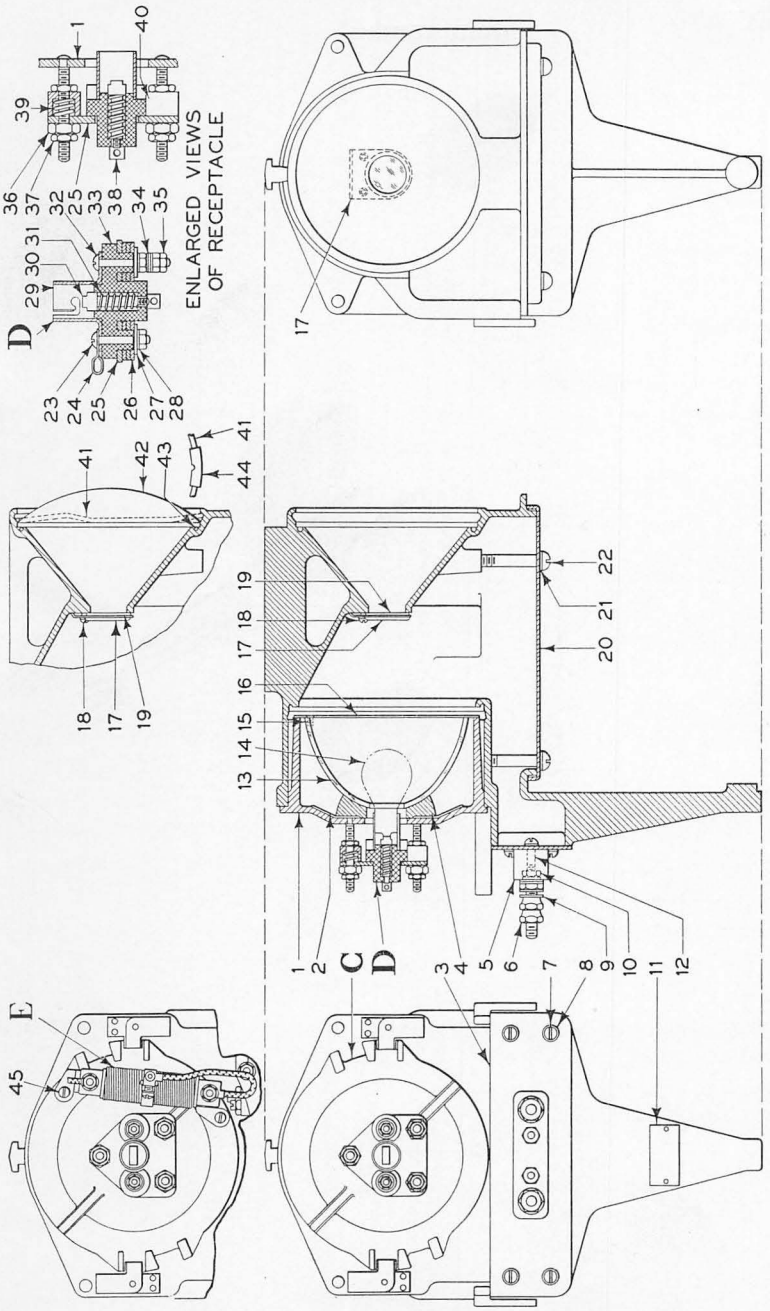
ENLARGED VIEWS OF RECEPTACLE
A-B
Type SA Inoperative Mechanism

Type SA Inoperative Mechanism

For Type SA Marker Lights and Fixed Arms

Note: Mechanisms shown on this plate may be used with Type SA Marker Lights and Fixed Arms as shown on Plate H2639.

These mechanisms will operate on d-c. or a-c. any voltage or frequency by installing the proper lamp.

Lamp Fig. 14 is not included with mechanism complete and must be ordered separately.

If other colors than red, as listed below, are required, same will be furnished when specified.

Drawing references are shown for convenience in checking shipping lists and invoices.

Fig. No.	Name	Drawing Reference
	Order by plate, figure number and name	
A	Type SA Inoperative Mechanism Complete, as shown, equipped with red disc Fig. 19, for use with stepped lens signals	53052–18 Gr. 3
A1	as above, except with one ohm resistor Fig. E	53052–38 Gr. 3
A2	same as Fig. A, except with five ohm resistor Fig. E1	53052–39 Gr. 3
B	Type SA Inoperative Mechanism Complete, equipped with red disc Fig. 19 and lens Fig. 42, for use with compound lens signal	53052–18 Gr. 4
B1	as above, except with one ohm resistor Fig. E	53052–38 Gr. 4
B2	same as Fig. B, except with five ohm resistor Fig. E1	53052–39 Gr. 4
C	Reflector Holder Complete, comprises lamp receptacle and parts Figs. 1, 2, 4, 13, 15 and 16	53056–1 Gr. 1
D	Lamp Receptacle Complete, as shown, with leads for ¼″ to 5/16″ terminal posts	53058–5 Gr. 2
D1	as above, except ¼″ terminal posts	53058–5 Gr. 3
E	Resistance Unit Complete, one ohm, 2.5 amps., with mounting screws	55945–1 Gr. 3
E1	as above, except five ohms, 1 amp	55945–1 Gr. 1
1	Holder, for reflector unit Fig. C, includes studs for mounting receptacle riveted in place	53068–2 441–120
2	Washer, for use between pad and holder, for reflector	590–25
3	Plate, for mounting terminal block	41885–21
4	Pad, for use behind reflector	1533–32
5	Block Complete, includes screws used as terminal posts	46048–10 Gr. 3
6	Nut, No. 14–24, for terminal posts	42843–1

(*Continued on following page*)

GENERAL RAILWAY SIGNAL COMPANY January 1941

Type SA Inoperative Mechanism

For Type SA Marker Lights and Fixed Arms

Drawing references are shown for convenience in checking shipping lists and invoices.

Fig. No.	Name	Drawing Reference
	Order by plate, figure number and name	
7	Screw, No. 10-32 x ½″ rd. hd., for fastening plate Fig. 3 to case..	2438-1
8	Lock Washer, for screw Fig. 7.....	53029-7
9	Washer, for terminal posts.....	1225-2
10	Nut, No. 10-32 x ¼″ hex., for screw Fig. 12.....	577-7
11	Name Plate, includes escutcheon pins, for fastening to case.....	401-180 0677-1
12	Screw, No. 10-32 x ⅞″ rd. hd., for fastening terminal block to plate.....	2438-18
13	Reflector, glass, as shown.....	53122
14	Incandescent Lamp, 2 pin, candelabra single contact bayonet base S-8 bulb, single filament, 1000 hour rating, 11.3 volts, 13.3 watts, recommended for operation on 10 volts.....	34866-32
14a	as above, except S-11 bulb, single filament, 1000 hour rating, 8 volts, 10 watts, recommended for operation on 7.2 volts.....	34866-43
14b	same as Fig. 14, except S-11 bulb, major and minor filaments in multiple, 1000 hour rating, 8 volts, 13+3.5 watts, recommended for operation on 7.2 volts.....	34866-37
14c	same as Fig. 14, except S-11 bulb, single filament, 1000 hour rating, 9 volts, 15.3 watts, recommended for operation on 8 volts..	34866-34
14d	same as Fig. 14, except S-11 bulb, major and minor filaments in multiple, 1000 hour rating, 10 volts, 13+3.5 watts, recommended for operation on 9 volts.....	34866-60
14e	same as Fig. 14, except S-11 bulb, single filament, 1000 hour rating, 10 volts, 25 watts, recommended for operation on 9 volts..	34866-47
14f	same as Fig. 14, except S-11 bulb, single filament, 2000 hour rating, 13.5 volts, 17 watts, recommended for operation on 12 volts	34866-25
14g	same as Fig. 14, except G-16½ bulb, single filament, 1000 hour rating, 115 volts, 25 watts, recommended for operation on 110 volts.....	34866-45

(Continued on following page)

Type SA Inoperative Mechanism

For Type SA Marker Lights and Fixed Arms

Drawing references are shown for convenience in checking shipping lists and invoices.

Fig. No.	Name	Drawing Reference
	Order by plate, figure number and name	
14h	same as Fig. 14, except S-11 bulb, single filament, 1000 hour rating, 4 volts, 3 watts, recommended for compound lens signals only, for operation on 4 volts	34866-35
14j	same as Fig. 14, except S-11 bulb, single filament, 1000 hour rating, 8 volts, 5 watts, recommended for compound lens signals only, for operation on 8 volts	34866-55
14k	same as Fig. 14, except S-11 bulb, major and minor filaments in multiple, 1000 hour rating, 8 volts, 5+3.5 watts, recommended for compound lens signals only, for operation on 8 volts	34866-58
14m	same as Fig. 14, except S-11 bulb, single filament, 1000 hour rating, 10 volts, 5 watts, recommended for compound lens signals only, for operation on 10 volts	34866-38
15	Screw, No. 4-36 x 1/4" fl. hd., for fastening retainer to holder	35699-2
16	Retainer, for reflector	45647-5
17	Plate, for holding color disc in place	55790
18	Screw, No. 6-32 x 1/4" rd. hd., with lock washer, for fastening plate Fig. 17 to case	2613-1 53029-1
19	Color Disc Complete, red, A.A.R. Standard, assembled in retaining cup	53073 Gr. 2
19a	as above, except yellow with one side depolished, A.A.R. Standard	53073 Gr. 12
19b	same as Fig. 19, except green, pre-cracked, A.A.R. Standard	53073 Gr. 3
19c	same as Fig. 19, except purple, A.A.R. Standard	53073 Gr. 7
20	Cover Plate, for bottom of case	5718-15
21	Lock Washer, for screw Fig. 22	53029-8
22	Screw, 1/4"-20 x 1 3/4" rd. hd., for fastening cover plate to case, four required	15287-22
23	Screw, No. 8-32 x 7/8" rd. hd., used as shown	2553-21
24	Clip, for holding connectors in place	53114-1
25	Plate, for mounting receptacle on holder	53104

(Continued on following page)

GENERAL RAILWAY SIGNAL COMPANY January 1941

Type SA Inoperative Mechanism

For Type SA Marker Lights and Fixed Arms

Drawing references are shown for convenience in checking shipping lists and invoices.

Fig. No.	Name	Drawing Reference
	Order by plate, figure number and name	
26	Washer, used as insulation, six required	493-18
27	Washer, for screws Figs. 23 and 32	1225-26
28	Lock Washer, for screws Figs. 23 and 32	43058
29	Receptacle, as shown	34864-13
30	Plunger, for contacting lamp base	53107-5
31	Spring, for plunger, as shown	786-64
32	Screw, No. 8-32 x 1¼″ rd. hd., used as shown	2553-23
33	Block, only, for receptacle	53091-2
34	Washer, for screw Fig. 32	2534-1
35	Nut, No. 8-32 x ⅛″ hex., for screws Figs. 23 and 32	3891-1
36	Nut, No. 10-32 hex., for stud on reflector holder	46277-1
37	Nut, No. 10-32 x ⅛″ hex., for stud, as shown	40796
38	Terminal, for plunger Fig. 30	53108
39	Spring, for receptacle	586-32
40	Nut, No. 10-32, cup-shape, for spring	20673-2
41	Spring, for holding lens in case	51107-6
42	Lens, 4½″ dia., 6½″ focus, for compound lens units	54249-3
43	Gasket, rubber, for use between lens and case	52983-3
44	Sleeve, for spring Fig. 41	15284-17
45	Screw, No. 8-32 x 5/16″ rd. hd., with lock washer, for fastening resistance unit Fig. E to holder Fig. 1	2553-9 53029-4

Memoranda

PLATE H2675

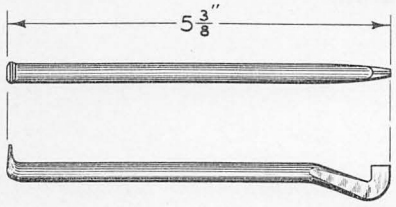

1
Offset Screw Driver

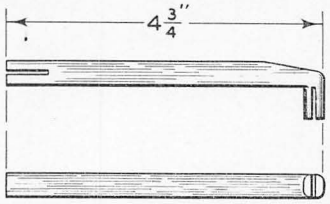

2
Contact Adjuster

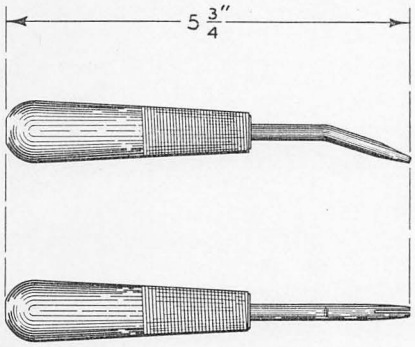

3
Contact Adjuster

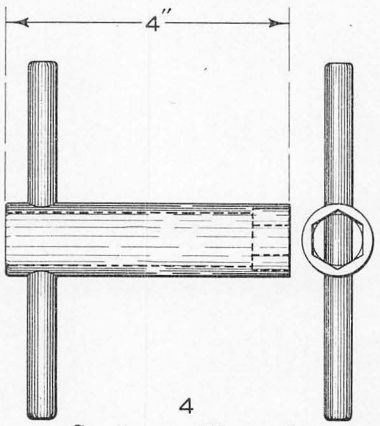

4
Socket Wrench

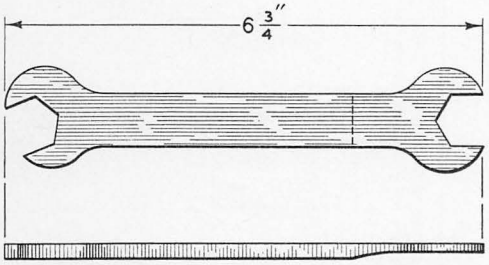

5
Wrench

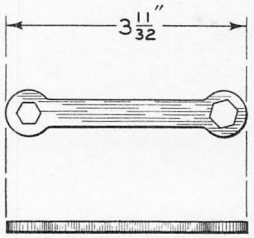

6
Wrench

Adjusting Tools for Type S and SA Signal Mechanisms

January 1941 GENERAL RAILWAY SIGNAL COMPANY

Adjusting Tools

For Type S and SA Signal Mechanisms

Drawing references are shown for convenience in checking shipping lists and invoices.

Fig. No.	Name	Drawing Reference
	Order by plate, figure number and name	
1	Offset Screw Driver, for adjusting Types S and SA signal mechanisms	38885-3
2	Contact Adjuster, for Types S and SA signal mechanisms	~~47951-13~~ 48792
3	Contact Adjuster, for Types S and SA signal mechanisms	47951-14
4	Socket Wrench, for adjusting Types S and SA signal mechanisms	15197-22
5	Wrench, open end, for adjusting Types S and SA signal mechanisms	43576-6
6	Wrench, for adjusting Types S and SA signal mechanisms	43576-7

Memoranda

Section H, Part 27

Type SC
Color-Light Signals

Searchlight Type

General Railway Signal Company
Printed in U. S. A.

Type SC Color-Light Signals

Searchlight Type

Foreword and General Information

The Type SC Color-Light Signal, searchlight type, is a newly developed type signal into which has been incorporated many new features and improvements as follows:

1. Progressive aspects from RED to YELLOW to GREEN and from GREEN to YELLOW to RED with no RED indication flash given when changing from YELLOW to GREEN or vice versa.

2. SC mechanisms have two tractive-armature relays, DG (green) and HG (yellow), having the same characteristics as standard d-c. relays.

3. Operation of the DG and HG relays is positive; a greater mechanical release torque exists in the SC signal than in any other existing color-light signal.

4. Each DG and HG relay may be provided with a maximum of six dependent FB (front-back) contacts. SC neutral-neutral mechanisms are regularly provided with two dependent FB contacts on the DG relay and four dependent FB contacts on the HG relay; SC polar-neutral mechanisms with four dependent FB contacts on each relay.

5. Signal controls or indication circuits may be handled directly through the DG and HG contacts, for example; HG relay contacts may be used for:

   a. Breaking or pole-changing the controls of the preceding signal.
   b. Breaking the DG relay's control.
   c. Operating a primary track relay, and many other uses as may suit requirements.

   Indication circuits etc. may be controlled through the DG relay contacts.

6. Improved optical system gives more intense and uniform beam with same wattage lamp. Longer range on lower energy consumption is the result.

7. Sliding the mechanism into the housing on tracks provided, plug-couples the mechanism plugboard to the housing plugboard. The door cannot be closed unless the mechanism carrying handle is lowered, which locks the mechanism in place.

8. Twelve-point, high pressure plug contacts are used insuring positive, low-resistance plugboard connections.

9. All external wires are connected to a terminal board which is permanently fastened in the rear of the housing and accessible at all times, whether the mechanism is in the case or not. The mechanism can be removed without disturbing the arrangement of internal or external wires.

10. SC mechanisms are equipped with needle-shaped bearings which require no lubrication. They have been adopted after successful operation in such constantly moving parts as armatures of code following relays used in track circuits.

11. Improved design and ruggedly built throughout.

12. All SC Signals are provided with resilient mounting.

Some of the features of the SA signal have been retained in the SC. These are as follows:

1. One lamp projects three aspects through an improved lens system. No focusing is necessary when replacing lamp.

2. Interchangeable mechanisms. May be used in either high, dwarf, bridge or bracket signals.

3. Direct drive from relays to color-disc assembly changes aspects.

4. Control of the DG and HG relays may be local or line. The two relays can be furnished for operation on neutral or polar line circuits.

5. Economical circuiting with the ample contact capacity available. Many applications with a minimum of additional relays and other equipment made possible.

6. Lens combinations to produce beam patterns to fit railroad curvatures are available.

7. Slanting color-discs eliminate phantom light reflections from the focal point.

8. Light beam alignment made by hair-line peep sight. This is not included on dwarf signals.

9. Three available wire entrances to case. A fourth entrance, which is optional and provided only when specified, is drilled in 45-degree bottom surface of case for special assemblies such as top-of-mast mounted signals.

SC Signals are designed for operation on direct current. Standard 8 and 10 volt windings are available. If other voltages are required kindly consult our nearest District Office.

SC Signals are regularly furnished with either stepped lens as shown on Plate H2747 or with compound lens as shown on Plate H2751. Lamp of less than 10 watt rating should not be used with stepped lens signals. Any wattage lamp suitable for SC signals may be used with compound lens signals.

An 8⅜″ diameter deflecting or spredlite roundel may be added to compound and stepped lens signals to deflect the beam 20 degrees or 40 degrees to one side of the main beam for curved track or spread the beam 15 degrees or 30 degrees to each side of the beam axis for reverse curves.

Phankill Units may be applied to signal units if desired.

Questionnaire sheets have been placed immediately following this page and are to be removed from catalog, completely filled out and attached to your order when ordering NEW signal units. This information will help to determine the correct signal unit required for each particular location and condition and also the special characteristics such as timing, indication colors, fittings, contacts, type of control etc.

Will you kindly let us know when your supply of questionnaire sheets is low by simply writing your name, title and address in space provided at bottom of questionnaire when sending in your order.

When ordering complete signal units for REPLACEMENT give circuit number, name and drawing reference and specify the drawing numbers on the nameplates located on the housing door and mechanism.

Memoranda

Questionnaire

This questionnaire is for use when ordering ***new SC Signal Units.*** Please remove questionnaire from catalog, fill out the information requested and attach to order. Note—When possible furnish prints of typical circuits so that a check may be made of special characteristics such as timing, also furnish standard plans showing construction of bridges, cantilevers, etc.

When ordering ***replacement signal units,*** give the drawing number stamped on housing and mechanism nameplates in addition to the regular catalog reference.

Data supplied below covers only (check one)

____High Signal Unit ____Dwarf Signal-1 Arm ____Dwarf Signal-2 Arm
____Bridge Deck Unit ____Inoperative Unit

Answers to questions 1 to 7 inclusive are required for all signal units shown on Plates H2725 to H2755

1. Type of Lens: Stepped_____ Compound_____
2. Color of signal indications desired:
   Standard color combination: Red_____ Yellow_____ Green_____
   Special color combination: _____ _____ _____
3. Mechanism to operate from:
   Primary Battery: Make and type_____No. of Cells____
   Storage Battery: Make and type_____No. of Cells____
   How Charged_____
4. Incandescent Lamp: Volts_____ Watts_____
   Filament: Single_____ Major and Minor_____
   Note: The recommended wattage is as follows:
   Compound lens signals on tangent track—not less than 5 watts
   Stepped lens signals on tangent track—not less than 10 watts
   For curved track, higher wattages are desirable.
5. Type of control: Polarized_____ Neutral_____
   Signals operated: Locally_____Over line_____Max. line res. _____
6. Contacts desired: DG Relay_____ HG Relay_____

Standard combination—Neutral-Neutral	2 Dep. F&B	4 Dep. F&B
Standard combination—Polar-Neutral	4 Dep. F&B	4 Dep. F&B

7. Phankill Unit required: Yes_____ No_____
   If special features are required that are not covered by this questionnaire, give details._____
   _____

Answers to questions 8 to 12 inclusive are for high signal units only shown on Plates H2747 to H2755 and Bridge Signals shown on Plate H2713, Figs. B and C

8. Number of units for tangent track:_____
   Note—Deflecting or Spredlite roundels not required for tangent track.
   Number of units for curved track:_____
   With 20° deflecting roundel_____ With 40° deflecting roundel_____
   With 15° Spredlite roundel_____ With 30° Spredlite roundel_____
   If deflecting, specify right_____or left hand_____deflection.
9. Wire Entrance (check one)
   2″ flex. conduit shown on Plate H2759, Fig. T_____
   2″ flex. conduit shown on Plate H2759, Fig. V_____
   Parkway Cable shown on Plate H2759, Fig. U_____
   Parkway Cable shown on Plate H2759, Fig. W_____
   If special conduit is required, give details_____
   _____

(Continued on following page)

10. Type of mounting: Track Side of mast___ Top-of-mast___ Field Side of mast___
Nominal diameter of mast: 5″_____ 6″_____

11. Standard Background (35″ dia.)_____
If special background is required, give details_____

12. Door Hinges: Bottom_____ Right Side_____ Left Side_____
Note: Right or left side is determined by facing contact end of signal.

Answers to questions 13 to 17 inclusive are for Bridge Deck Signal Units only shown on Plate H2913, Fig. A

13. Number of units for tangent track:_____
Note—Deflecting or Spredlite roundels not required for tangent track.
Number of units for curved track:_____
With 20° deflecting roundel_____ With 40° deflecting roundel_____
With 15° Spredlite roundel_____ With 30° Spredlite roundel_____
If deflecting, specify right_____ or left hand_____ deflection.

14. Signals to be arranged for mounting on:
Channel_____ I Beam_____ Plates_____
Will these be furnished by railroad_____

15. Standard Background (35″ dia.)_____ If special background is required, give details_____

16. Door Hinges: Bottom_____ Right Side_____ Left Side_____
Note—Right or left side is determined by facing contact end of signal.

17. Wire Entrance (check one)
2″ flex. conduit shown on Plate H2759, Fig. V_____
Parkway Cable shown on Plate H2759, Fig. W_____

Answers to questions 18 and 19 are for Dwarf Signals only as shown on Plates H2725 to H2737

18. If two-arm dwarf state if mechanisms are identical in both arms_____
If not describe difference_____

19. Wire Entrance (check one)
2″ flex. conduit shown on Plate H2759, Fig. V_____
Parkway Cable shown on Plate H2759, Fig. W_____

If additional questionnaires are required, please fill out the following:

Qty. Req'd_____

Name_____

Title_____

Railroad_____

Address_____

GENERAL RAILWAY SIGNAL COMPANY
ROCHESTER 2, N. Y.

February 1948

Questionnaire

This questionnaire is for use when ordering ***new SC Signal Units.*** Please remove questionnaire from catalog, fill out the information requested and attach to order. Note—When possible furnish prints of typical circuits so that a check may be made of special characteristics such as timing, also furnish standard plans showing construction of bridges, cantilevers, etc.

When ordering ***replacement signal units,*** give the drawing number stamped on housing and mechanism nameplates in addition to the regular catalog reference.

Data supplied below covers only (check one)

____High Signal Unit ____Dwarf Signal-1 Arm ____Dwarf Signal-2 Arm
____Bridge Deck Unit ____Inoperative Unit

Answers to questions 1 to 7 inclusive are required for all signal units shown on Plates H2725 to H2755

1. Type of Lens: Stepped_____ Compound_____
2. Color of signal indications desired:
   Standard color combination: Red_____ Yellow_____ Green_____
   Special color combination: _____ _____ _____
3. Mechanism to operate from:
   Primary Battery: Make and type_____No. of Cells____
   Storage Battery: Make and type_____No. of Cells____
   How Charged_____
4. Incandescent Lamp: Volts_____ Watts_____
   Filament: Single_____ Major and Minor_____
   Note: The recommended wattage is as follows:
   Compound lens signals on tangent track—not less than 5 watts
   Stepped lens signals on tangent track—not less than 10 watts
   For curved track, higher wattages are desirable.
5. Type of control: Polarized_____ Neutral_____
   Signals operated: Locally_____Over line_____Max. line res. _____
6. Contacts desired: DG Relay_____ HG Relay_____
   Standard combination—Neutral-Neutral 2 Dep. F&B 4 Dep. F&B
   Standard combination—Polar-Neutral 4 Dep. F&B 4 Dep. F&B
7. Phankill Unit required: Yes_____ No_____
   If special features are required that are not covered by this questionnaire, give details._____

Answers to questions 8 to 12 inclusive are for high signal units only shown on Plates H2747 to H2755 and Bridge Signals shown on Plate H2713, Figs. B and C

8. Number of units for tangent track:_____
   Note—Deflecting or Spredlite roundels not required for tangent track.
   Number of units for curved track:_____
   With 20° deflecting roundel_____ With 40° deflecting roundel_____
   With 15° Spredlite roundel_____ With 30° Spredlite roundel_____
   If deflecting, specify right_____or left hand_____deflection.
9. Wire Entrance (check one)
   2″ flex. conduit shown on Plate H2759, Fig. T_____
   2″ flex. conduit shown on Plate H2759, Fig. V_____
   Parkway Cable shown on Plate H2759, Fig. U_____
   Parkway Cable shown on Plate H2759, Fig. W_____
   If special conduit is required, give details_____

(Continued on following page)

10. Type of mounting: Track Side of mast___ Top-of-mast___ Field Side of mast___
Nominal diameter of mast: 5″_____ 6″_____

11. Standard Background (35″ dia.)_____
If special background is required, give details_____

12. Door Hinges: Bottom_____ Right Side_____ Left Side_____
Note: Right or left side is determined by facing contact end of signal.

Answers to questions 13 to 17 inclusive are for Bridge Deck Signal Units only shown on Plate H2913, Fig. A

13. Number of units for tangent track:_____
Note—Deflecting or Spredlite roundels not required for tangent track.
Number of units for curved track:_____
With 20° deflecting roundel_____ With 40° deflecting roundel_____
With 15° Spredlite roundel_____ With 30° Spredlite roundel_____
If deflecting, specify right_____or left hand_____deflection.

14. Signals to be arranged for mounting on:
Channel_____ I Beam_____ Plates_____
Will these be furnished by railroad_____

15. Standard Background (35″ dia.)_____ If special background is required, give details_____

16. Door Hinges: Bottom_____ Right Side_____ Left Side_____
Note—Right or left side is determined by facing contact end of signal.

17. Wire Entrance (check one)
2″ flex. conduit shown on Plate H2759, Fig. V_____
Parkway Cable shown on Plate H2759, Fig. W_____

Answers to questions 18 and 19 are for Dwarf Signals only as shown on Plates H2725 to H2737

18. If two-arm dwarf state if mechanisms are identical in both arms_____
If not describe difference_____

19. Wire Entrance (check one)
2″ flex. conduit shown on Plate H2759, Fig. V_____
Parkway Cable shown on Plate H2759, Fig. W_____

If additional questionnaires are required, please fill out the following:

Qty. Req'd_____

Name_____

Title_____

Railroad_____

Address_____

GENERAL RAILWAY SIGNAL COMPANY
ROCHESTER 2, N. Y.

February 1948

Questionnaire

This questionnaire is for use when ordering ***new SC Signal Units.*** Please remove questionnaire from catalog, fill out the information requested and attach to order. Note—When possible furnish prints of typical circuits so that a check may be made of special characteristics such as timing, also furnish standard plans showing construction of bridges, cantilevers, etc.

When ordering ***replacement signal units,*** give the drawing number stamped on housing and mechanism nameplates in addition to the regular catalog reference.

Data supplied below covers only (check one)

____High Signal Unit ____Dwarf Signal-1 Arm ____Dwarf Signal-2 Arm
____Bridge Deck Unit ____Inoperative Unit

Answers to questions 1 to 7 inclusive are required for all signal units shown on Plates H2725 to H2755

1. Type of Lens: Stepped_____ Compound_____
2. Color of signal indications desired:
   Standard color combination: Red_____ Yellow_____ Green_____
   Special color combination: _____ _____ _____
3. Mechanism to operate from:
   Primary Battery: Make and type_____No. of Cells____
   Storage Battery: Make and type_____No. of Cells____
   How Charged_____
4. Incandescent Lamp: Volts_____ Watts_____
   Filament: Single_____ Major and Minor_____
   Note: The recommended wattage is as follows:
   Compound lens signals on tangent track—not less than 5 watts
   Stepped lens signals on tangent track—not less than 10 watts
   For curved track, higher wattages are desirable.
5. Type of control: Polarized_____ Neutral_____
   Signals operated: Locally_____Over line_____Max. line res. _____
6. Contacts desired: DG Relay_____ HG Relay_____
   Standard combination—Neutral-Neutral 2 Dep. F&B 4 Dep. F&B
   Standard combination—Polar-Neutral 4 Dep. F&B 4 Dep. F&B
7. Phankill Unit required: Yes_____ No_____
   If special features are required that are not covered by this questionnaire, give details._____

Answers to questions 8 to 12 inclusive are for high signal units only shown on Plates H2747 to H2755 and Bridge Signals shown on Plate H2713, Figs. B and C

8. Number of units for tangent track:_____
   Note—Deflecting or Spredlite roundels not required for tangent track.
   Number of units for curved track:_____
   With 20° deflecting roundel_____ With 40° deflecting roundel_____
   With 15° Spredlite roundel_____ With 30° Spredlite roundel_____
   If deflecting, specify right_____or left hand_____deflection.
9. Wire Entrance (check one)
   2″ flex. conduit shown on Plate H2759, Fig. T_____
   2″ flex. conduit shown on Plate H2759, Fig. V_____
   Parkway Cable shown on Plate H2759, Fig. U_____
   Parkway Cable shown on Plate H2759, Fig. W_____
   If special conduit is required, give details_____

(*Continued on following page*)

10. Type of mounting: Track Side of mast___ Top-of-mast___ Field Side of mast___
Nominal diameter of mast: 5″_____ 6″_____

11. Standard Background (35″ dia.)_____
If special background is required, give details_____

12. Door Hinges: Bottom_____ Right Side_____ Left Side_____
Note: Right or left side is determined by facing contact end of signal.

Answers to questions 13 to 17 inclusive are for Bridge Deck Signal Units only shown on Plate H2913, Fig. A

13. Number of units for tangent track:_____
Note—Deflecting or Spredlite roundels not required for tangent track.
Number of units for curved track:_____
With 20° deflecting roundel_____ With 40° deflecting roundel_____
With 15° Spredlite roundel_____ With 30° Spredlite roundel_____
If deflecting, specify right_____or left hand_____deflection.

14. Signals to be arranged for mounting on:
Channel_____ I Beam_____ Plates_____
Will these be furnished by railroad_____

15. Standard Background (35″ dia.)_____ If special background is required, give details_____

16. Door Hinges: Bottom_____ Right Side_____ Left Side_____
Note—Right or left side is determined by facing contact end of signal.

17. Wire Entrance (check one)
2″ flex. conduit shown on Plate H2759, Fig. V_____
Parkway Cable shown on Plate H2759, Fig. W_____

Answers to questions 18 and 19 are for Dwarf Signals only as shown on Plates H2725 to H2737

18. If two-arm dwarf state if mechanisms are identical in both arms_____
If not describe difference_____

19. Wire Entrance (check one)
2″ flex. conduit shown on Plate H2759, Fig. V_____
Parkway Cable shown on Plate H2759, Fig. W_____

If additional questionnaires are required, please fill out the following:

Qty. Req'd_____

Name_____

Title_____

Railroad_____

Address_____

GENERAL RAILWAY SIGNAL COMPANY
ROCHESTER 2, N. Y.

February 1948

Questionnaire

This questionnaire is for use when ordering ***new SC Signal Units.*** Please remove questionnaire from catalog, fill out the information requested and attach to order. Note—When possible furnish prints of typical circuits so that a check may be made of special characteristics such as timing, also furnish standard plans showing construction of bridges, cantilevers, etc.

When ordering ***replacement signal units,*** give the drawing number stamped on housing and mechanism nameplates in addition to the regular catalog reference.

Data supplied below covers only (check one)

____High Signal Unit ____Dwarf Signal-1 Arm ____Dwarf Signal-2 Arm
____Bridge Deck Unit ____Inoperative Unit

Answers to questions 1 to 7 inclusive are required for all signal units shown on Plates H2725 to H2755

1. Type of Lens: Stepped_____ Compound_____
2. Color of signal indications desired:
   Standard color combination: Red_____ Yellow_____ Green_____
   Special color combination: _____ _____ _____
3. Mechanism to operate from:
   Primary Battery: Make and type_____No. of Cells____
   Storage Battery: Make and type_____No. of Cells____
   How Charged_____
4. Incandescent Lamp: Volts_____ Watts_____
   Filament: Single_____ Major and Minor_____
   Note: The recommended wattage is as follows:
   Compound lens signals on tangent track—not less than 5 watts
   Stepped lens signals on tangent track—not less than 10 watts
   For curved track, higher wattages are desirable.
5. Type of control: Polarized_____ Neutral_____
   Signals operated: Locally_____Over line_____Max. line res. _____
6. Contacts desired: DG Relay_____ HG Relay_____
   Standard combination—Neutral-Neutral 2 Dep. F&B 4 Dep. F&B
   Standard combination—Polar-Neutral 4 Dep. F&B 4 Dep. F&B
7. Phankill Unit required: Yes_____ No_____
   If special features are required that are not covered by this questionnaire, give details._____
   _____

Answers to questions 8 to 12 inclusive are for high signal units only shown on Plates H2747 to H2755 and Bridge Signals shown on Plate H2713, Figs. B and C

8. Number of units for tangent track:_____
   Note—Deflecting or Spredlite roundels not required for tangent track.
   Number of units for curved track:_____
   With 20° deflecting roundel_____ With 40° deflecting roundel_____
   With 15° Spredlite roundel_____ With 30° Spredlite roundel_____
   If deflecting, specify right_____or left hand_____deflection.
9. Wire Entrance (check one)
   2″ flex. conduit shown on Plate H2759, Fig. T_____
   2″ flex. conduit shown on Plate H2759, Fig. V_____
   Parkway Cable shown on Plate H2759, Fig. U_____
   Parkway Cable shown on Plate H2759, Fig. W_____
   If special conduit is required, give details_____
   _____

(Continued on following page)

10. Type of mounting: Track Side of mast___ Top-of-mast___ Field Side of mast___
Nominal diameter of mast: 5″_____ 6″_____

11. Standard Background (35″ dia.)_____
If special background is required, give details_____

12. Door Hinges: Bottom_____ Right Side_____ Left Side_____
Note: Right or left side is determined by facing contact end of signal.

Answers to questions 13 to 17 inclusive are for Bridge Deck Signal Units only shown on Plate H2913, Fig. A

13. Number of units for tangent track:_____
Note—Deflecting or Spredlite roundels not required for tangent track.
Number of units for curved track:_____
With 20° deflecting roundel_____ With 40° deflecting roundel_____
With 15° Spredlite roundel_____ With 30° Spredlite roundel_____
If deflecting, specify right_____ or left hand_____ deflection.

14. Signals to be arranged for mounting on:
Channel_____ I Beam_____ Plates_____
Will these be furnished by railroad_____

15. Standard Background (35″ dia.)_____ If special background is required, give details_____

16. Door Hinges: Bottom_____ Right Side_____ Left Side_____
Note—Right or left side is determined by facing contact end of signal.

17. Wire Entrance (check one)
2″ flex. conduit shown on Plate H2759, Fig. V_____
Parkway Cable shown on Plate H2759, Fig. W_____

Answers to questions 18 and 19 are for Dwarf Signals only as shown on Plates H2725 to H2737

18. If two-arm dwarf state if mechanisms are identical in both arms_____
If not describe difference_____

19. Wire Entrance (check one)
2″ flex. conduit shown on Plate H2759, Fig. V_____
Parkway Cable shown on Plate H2759, Fig. W_____

If additional questionnaires are required, please fill out the following:

Qty. Req'd_____

Name_____

Title_____

Railroad_____

Address_____

GENERAL RAILWAY SIGNAL COMPANY
ROCHESTER 2, N. Y.

February 1948

Memoranda

PLATE H2701

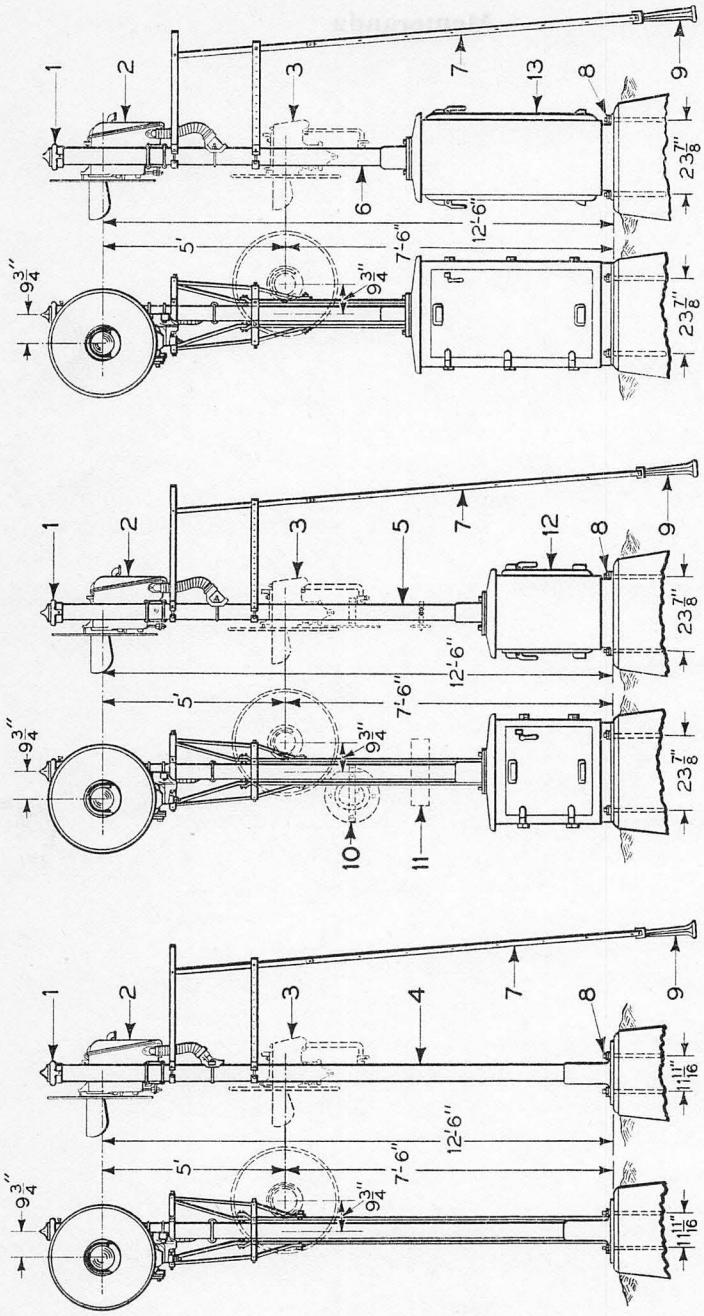

Type SC Color-Light Ground Signals
Single Unit

February 1948 GENERAL RAILWAY SIGNAL COMPANY

Type SC Color-Light Ground Signals

Single Unit

Note: See foreword and general information at the beginning of this part.

See Plate H2747 for signal units with stepped lens and Plate H2751 for signal units with compound lens.

The dimensions shown for height of signals are our recommended standards, however if masts of different heights are required, refer to small diagram and specify Dimension X.

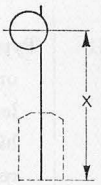

Signals will be furnished with 5″ dia., masts unless otherwise specified.

Drawing references are shown for convenience in checking shipping lists and invoices.

Fig. No.	Name	Drawing Reference
	Order by plate, figure number and name	
A	Type SC Color-Light Ground Signal Complete, consisting of one three-indication signal unit with stepped or compound lens **as specified,** side-of-mast mounted. Marker light, marker, number plate and anchor bolts are not included and must be ordered separately.....	45906
A1	as above, except with signal unit top-of-mast mounted	
B	Type SC Color-Light Ground Signal Complete, consisting of one three-indication signal unit with stepped or compound lens **as specified,** side-of-mast mounted, mast supported by low double door relay case. Marker light, marker, number plate and anchor bolts are not included and must be ordered separately. For relay case details and order references see Plate E0935. Refer to Plates E0939 and E0941 and specify shelving required in relay case.....	45906
B1	as above, except mounted on low single door relay case. For details and order references see Plate E0937.....	45906
B2	same as Fig. B, except with signal unit top-of-mast mounted..	
B3	same as Fig. B1, except with signal unit top-of-mast mounted.	

(*Continued on following page*)

GENERAL RAILWAY SIGNAL COMPANY February 1948

Type SC Color-Light Ground Signals

Single Unit

Drawing references are shown for convenience in checking shipping lists and invoices.

Fig. No.	Name	Drawing Reference
	Order by plate, figure number and name	
C	Type SC Color-Light Ground Signal Complete, consisting of one three-indication signal unit with stepped or compound lens as specified side-of-mast mounted, mast supported on high double door relay case. For relay case details and order references see Plate E0932. Refer to Plates E0940 and E0941 and specify shelving required in relay case	45906
C1	as above, except mounted on high single door relay case. For relay case details and order references see Plate E0934	45906
C2	same as Fig. C, except with signal unit top-of-mast mounted.	
C3	same as Fig. C1, except with signal unit top-of-mast mounted	
1	Pinnacle Complete, for mast of 5″ dia., pipe	56894 Gr. 2
2	Type SC Color-Light Signal Unit Complete, three-indication, with stepped lens, for side-of-mast mounting. For details and order references see Plate H2747	59010
2a	as above, except with compound lens. For details and order references see Plate H2751	59000
2b	same as Fig. 2 except for top-of-mast mounting	59010-1
2c	same as Fig. 2a, except for top-of-mast mounting	59000-1
3	Type SC Inoperative Color-Light Signal Unit Complete with stepped lens, for use as marker light as shown. For details and order references see Plate H2755	59098
3a	as above, except with compound lens. For details and order references see Plate H2755	59099
3b	Type W Color-Light Signal Unit Complete, for use in place of Figs. 3 and 3a if desired. For details and order references see Section H, Part 32	53125
4	Mast, 13′-9″ long of 5″ dia. pipe, with base for mounting on foundation as shown in Fig. A	48848-9 Gr. 106
5	Mast, 10′-1″ long of 5″ dia. pipe, with base for mounting on low relay case as shown in Fig. B	48848-9 Gr. 22

(*Continued on following page*)

February 1948 GENERAL RAILWAY SIGNAL COMPANY

Type SC Color-Light Ground Signals

Single Unit

Drawing references are shown for convenience in checking shipping lists and invoices.

Fig. No.	Name	Drawing Reference
	Order by plate, figure number and name	
6	Mast, 8′-1″ long of 5″ dia. pipe, with base for mounting on high relay case as shown in Fig. C	48848-9 Gr. 23
7	Ladder Complete, for 5″ pipe, includes hand rails, platform, clamps and bolts. Does not include foundation	310-105 Gr. 1
8	Anchor Bolt, 1″-8 x 2′-9″ long, with hex. nut and washer	10270-1 Gr. 1 074
9	Foundation, as shown for ladder	36773
10	Grade Marker, for use on Figs. A, B or C. Not included with signal complete and must be ordered separately. For fastening to mast of 5″ dia. pipe	53234-3 Gr. 1
11	Number Plate, with numbers **as specified**, includes brackets and bolts for fastening to mast of 5″ dia. pipe. For use on Fig. A, B or C. Not included with signal complete and must be ordered separately	21101-10 Gr. 1
12	Relay Case Complete, welded steel, 3′-8⅛″ high, 3′-2″ wide and 2′-6⅞″ deep with door on each side. For details and order references see Plate E0935	36006-15
12a	as above, except with door on one side only. For details and order references see Plate E0937	36006-16
13	Relay Case Complete, welded steel, 5′-7⅛″ high, 3′-2″ wide and 2′-6⅞″ deep, with door on each side. For details and order references see Plate E0932	36006-14
13a	as above, except with door on one side only. For details and order references see Plate E0934	36006-20

PLATE H2705

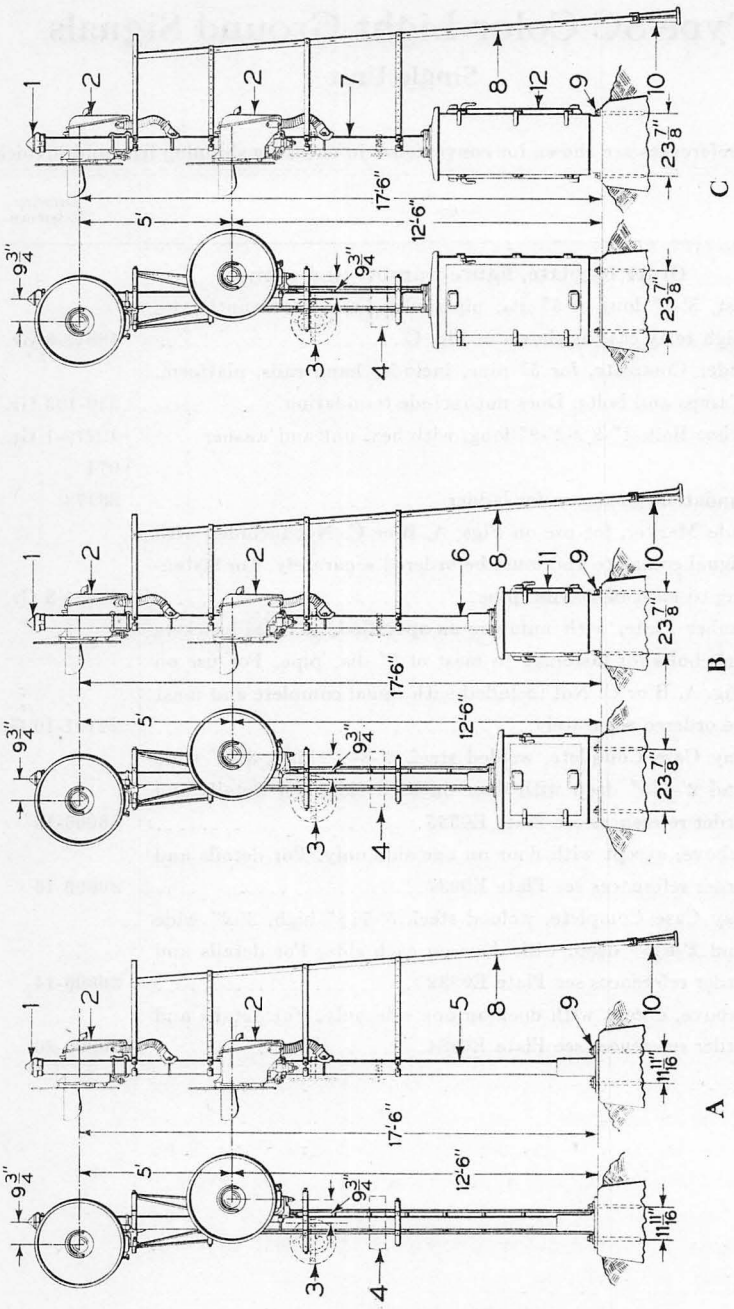

Type SC Color-Light Ground Signals
Two Unit

February 1948 GENERAL RAILWAY SIGNAL COMPANY

Type SC Color-Light Ground Signals

Two Unit

Note: See foreword and general information at the beginning of this part.

See Plate H2747 for signal units with stepped lens and Plate H2751 for signal units with compound lens.

The dimensions shown for height of signals and spacing of units (Min.5′-0″) are our recommended standards, however, if masts of different heights or spacing of units is required, refer to small diagram and specify Dimensions X, and Y.

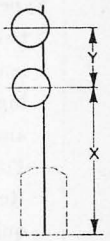

Signals will be furnished with masts of 5″ dia., pipe unless otherwise specified.

Drawing references are shown for convenience in checking shipping lists and invoices.

Fig. No.	Name	Drawing Reference
	Order by plate, figure number and name	
A	Type SC Color-Light Ground Signal Complete, consisting of two three-indication signal units with stepped or compound lens **as specified,** side-of-mast mounted. Marker, number plate and anchor bolts are not included and must be ordered separately	45906
B	Type SC Color-Light Ground Signal Complete, consisting of two three-indication signal units with stepped or compound lens **as specified,** side-of-mast mounted, mast supported on low double door relay case. Marker, number plate and anchor bolts are not included and must be ordered separately. For relay case details and order references see Plate E0935. Refer to Plates E0939 and E0941 and specify shelving required in relay case	45906
B1	as above, except mounted on low single door relay case. For relay case details and order references see Plate E0937	45906

(*Continued on following page*)

GENERAL RAILWAY SIGNAL COMPANY February 1948

Type SC Color-Light Ground Signals

Two Unit

Drawing references are shown for convenience in checking shipping lists and invoices.

Fig. No.	Name	Drawing Reference
	Order by plate, figure number and name	
C	Type SC Color-Light Ground Signal Complete, consisting of two three-indication signal units with stepped or compound lens **as specified,** side-of-mast mounted, mast supported on high double door relay case. Marker, number plate and anchor bolts are not included and must be ordered separately. For relay case details and order references see Plate E0932. Refer to Plates E0940 and E0941 and specify shelving required in relay case	45906
C1	as above, except mounted on high single door relay case. For relay case details and order references see Plate E0934	45906
1	Pinnacle Complete, for mast of 5″ dia. pipe	56894 Gr. 2
2	Type SC Color-Light Signal Unit Complete, three-indication, with stepped lens for side-of-mast mounting. For details and order references see Plate H2747	59010
2a	as above, except with compound lens. For details and order references see Plate H2751	59000
3	Grade Marker, for Figs. A, B, or C. Not included with signal complete and must be ordered separately. For fastening to mast of 5″ dia. pipe	53234-3 Gr. 1
4	Number Plate, with numbers **as specified,** includes brackets and bolts for fastening to mast of 5″ dia. pipe. For Figs. A, B, or C. Not included with signal complete and must be ordered separately	21101-10 Gr. 1
5	Mast, 18′-9″ long of 5″ dia. pipe, with base for mounting on foundation as shown in Fig. A	48848-9 Gr. 105
6	Mast, 15′-1″ long of 5″ dia. pipe, with base for mounting on low relay case as shown in Fig. B	48848-9 Gr. 41
7	Mast, 13′-2″ long of 5″ dia. pipe, with base for mounting on high relay case as shown in Fig. C	48848-9 Gr. 84
8	Ladder Complete, includes hand rails, platform, stays, clamps and bolts. Does not include foundation Fig. 10	310-119 Gr. 1

(Continued on following page)

February 1948 GENERAL RAILWAY SIGNAL COMPANY

Type SC Color-Light Ground Signals

Two Unit

Drawing references are shown for convenience in checking shipping lists and invoices.

Fig. No.	Name	Drawing Reference
	Order by plate, figure number and name	
9	Anchor Bolt, 1″-8 x 2′-0″ lg., with hex, nut and washer.....	10270-1 Gr. 1 074
10	Foundation, as shown, for ladder.....	36773
11	Relay Case Complete, welded steel, 3′-8⅛″ high, 3′-2″ wide and 2′-6⅞″ deep, with door on each side. For details and order references see Plate E0935.....	36006-15
11a	as above, except with door on one side only. For details and order references see Plate E0937.....	36006-16
12	Relay Case Complete, welded steel, 5′-7⅛″ high 3′-2″ wide and 2′-6⅞″ deep, with door on each side. For details and order references see Plate E0932.....	36006-14
12a	as above, except with door on one side only. For details and order references see Plate E0934.....	36006-20

PLATE H2709

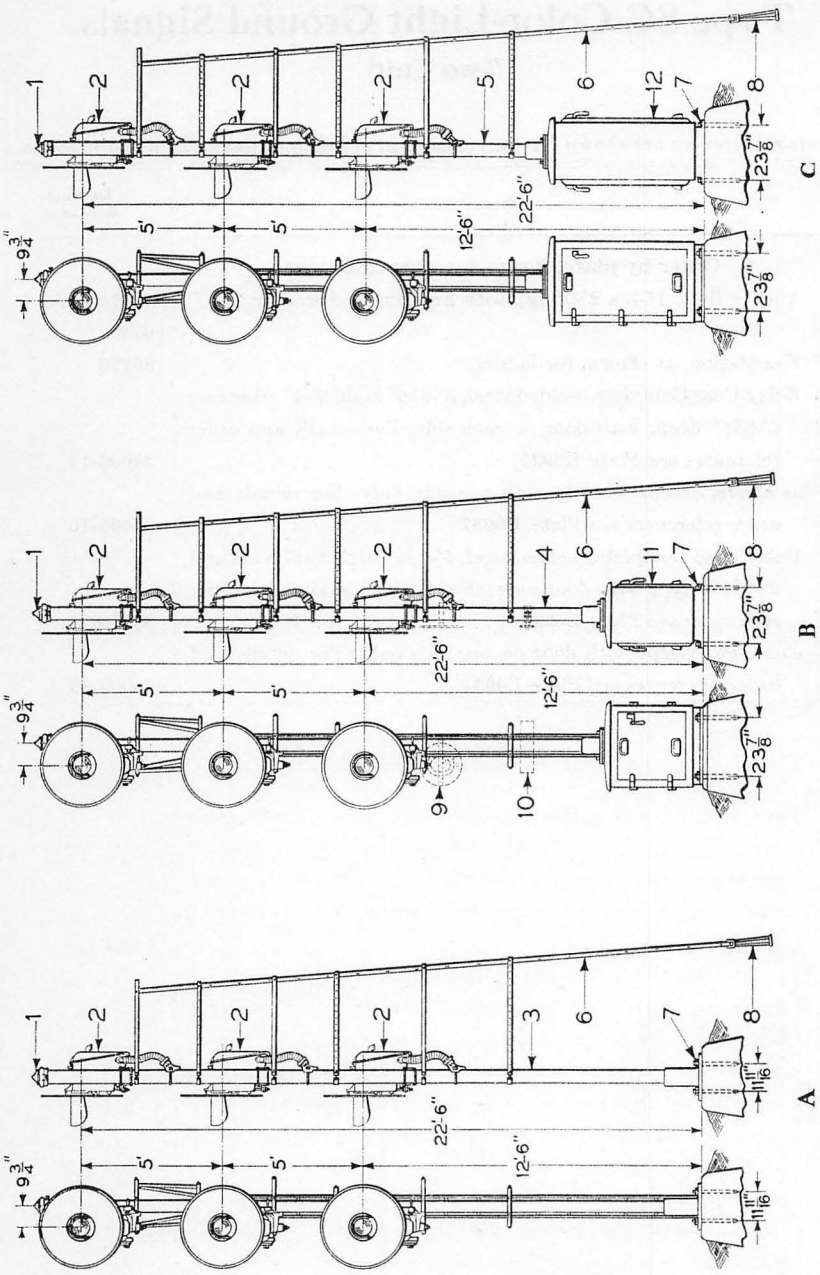

Type SC Color-Light Ground Signals
Three Unit

February 1948 GENERAL RAILWAY SIGNAL COMPANY

Type SC Color-Light Ground Signals

Three Unit

Note: See foreword and general information at the beginning of this part.

See Plate H2747 for signal units with stepped lens and Plate H2751 for signal units with compound lens.

The dimensions shown for height of signals and spacing of units (Min.5′-0″) are our recommended standards, however, if masts of different heights or spacing of units is required, refer to small diagram and specify Dimensions, X, Y, and Z.

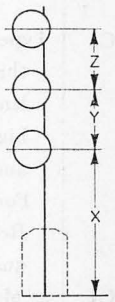

Signals will be furnished with 5″ dia. mast unless otherwise specified.

Drawing references are shown for convenience in checking shipping lists and invoices.

Fig. No.	Name	Drawing Reference
	Order by plate, figure number and name	
A	Type SC Color-Light Ground Signal Complete, consisting of three three-indication signal units with stepped or compound lens **as specified,** side-of-mast mounted. Marker, number plate and anchor bolts are not included and must be ordered separately	45906
B	Type SC Color-Light Ground Signal Complete, consisting of three three-indication signal units with stepped or compound lens **as specified,** side-of-mast mounted, mast supported on low double door relay case. Marker, number plate and anchor bolts are not included and must be ordered separately. For relay case details and order references see Plate E0935. Refer to Plates E0939 and E0941 and specify shelving required in relay case	45906
B1	as above, except mounted on low single door relay case. For relay case details and order references see Plate E0937	45906

(Continued on following page)

GENERAL RAILWAY SIGNAL COMPANY February 1948

Type SC Color-Light Ground Signals

Three Unit

Drawing references are shown for convenience in checking shipping lists and invoices.

Fig. No.	Name	Drawing Reference
	Order by plate, figure number and name	
C	Type SC Color-Light Ground Signal Complete, consisting of three three-indication signal units with stepped or compound lens **as specified,** side-of-mast mounted, mast supported on high double door relay case. Marker, number plate, and anchor bolts are not included and must be ordered separately. For relay case details and order references see Plate E0932. Refer to Plates E0940 and E0941 and specify shelving required in relay case	45906
C1	as above, except mounted on high single door relay case. For relay case details and order references see Plate E0934	45906
1	Pinnacle Complete, for mast of 5″ dia. pipe	56894 Gr. 2
2	Type SC Color-Light Signal Unit Complete, three-indication, with stepped lens, for side-of-mast mounting. For details and order references see Plate H2747	59010
2a	as above, except with compound lens. For details and order references see Plate H2751	59000
3	Mast, 23′-9″ long of 5″ dia. pipe, with base for mounting on foundation as shown in Fig. A	48848-9 Gr. 103
4	Mast, 20′-0″ long of 5″ dia. pipe, with base for mounting on low relay case as shown in Fig. B	48848-9 Gr. 19
5	Mast, 18′-1″ long of 5″ dia. pipe, with base for mounting on high relay case as shown in Fig. C	48848-9 Gr. 104
6	Ladder Complete, includes hand rails, platform, stays, clamps and bolts. Does not include foundation Fig. 8	310-118 Gr. 1
7	Anchor Bolt, 1″-8 x 2′-0″ lg., with hex. nut and washer	10270-1 Gr. 1 074
8	Foundation, as shown, for ladder	36773
9	Grade Marker for Figs. A, B or C. Not included with signal complete and must be ordered separately. For fastening to mast of 5″ dia. pipe	53234-3 Gr. 1

(Continued on following page)

February 1948 GENERAL RAILWAY SIGNAL COMPANY

Type SC Color-Light Ground Signals

Three Unit

Drawing references are shown for convenience in checking shipping lists and invoices.

Fig. No.	Name	Drawing Reference
	Order by plate, figure number and name	
10	Number Plate, with numbers **as specified** includes brackets and bolts for fastening to mast of 5″ dia. pipe. For Figs. A, B, or C. Not included with signal complete and must be ordered separately	21101-10 Gr. 1
11	Relay Case Complete, welded steel, 3′-8⅛″ high, 3′-2″ wide and 2′-6⅞″ deep, with door on each side. For details and order references see Plate E0935	36006-15
11a	as above, except with door on one side only. For details and order references see Plate E0937	36006-16
12	Relay Case Complete, welded steel, 5′-7⅛″ high, 3′-2″ wide and 2′-6⅞″ deep, with door on each side. For details and order references see Plate E0932	36006-14
12a	as above, except with door on one side only. For details and order references see Plate E0934	36006-20

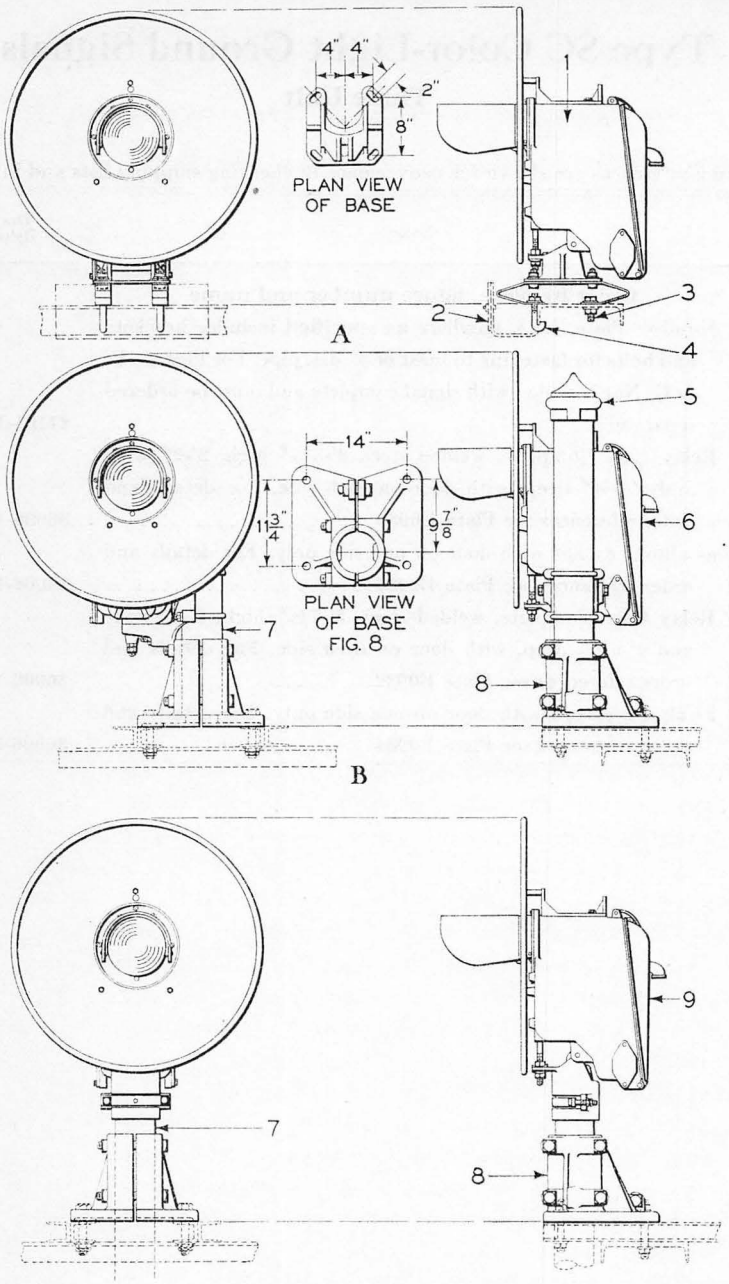

Type SC Color-Light Bridge Signals

Type SC Color-Light Bridge Signals

Note: See foreword and general information at the beginning of this part.

When ordering NEW bridge signals remove a questionnaire found at the beginning of this part, write in information requested and attach to your order.

When ordering complete bridge signals for **REPLACEMENT**, give the drawing numbers stamped on housing and mechanism nameplates in addition to the regular catalog reference.

Signal units are regularly furnished to give three indications: red, yellow and green. Specify if other color combinations are required.

Lamps, conduits and trunking conduit couplings are not included with signal units and must be ordered separately.

See Section H, Part 39 for order references on lamps and Plate H2759 for various methods of bringing wires into signal units.

Drawing references are shown for convenience in checking shipping lists and invoices.

Fig. No.	Name	Drawing Reference
	Order by plate, figure number and name	
A	Type SC Color-Light Bridge Signal Complete, consisting of one three-indication signal unit with stepped lens, with base for mounting as shown. Number plates are not included and must be ordered separately	59014
A1	as above, except with compound lens signal unit	59004
B	Type SC Color-Light Bridge Signal Complete, consisting of one three-indication signal unit with stepped lens, side-of-mast mounted to short mast as shown. Specify length of mast. Number plates are not included and must be ordered separately	
B1	as above, except with compound lens signal unit	
C	Type SC Color-Light Bridge Signal Complete, consisting of one three-indication signal unit with stepped lens, top-of-mast mounted on short mast as shown. Specify length of mast. Number plates are not included and must be ordered separately	
C1	as above, except with compound lens signal unit	

(Continued on following page)

GENERAL RAILWAY SIGNAL COMPANY February 1948

Type SC Color-Light Bridge Signals

Drawing references are shown for convenience in checking shipping lists and invoices.

Fig. No.	Name	Drawing Reference
	Order by plate, figure number and name	
1	Type SC Color-Light Signal Unit Complete, three-indication, with stepped lens. For details and order references, see Plates H2725 and H2747	59011
1a	as above, except with compound lens. For details and order references, see Plates H2729 and H2751	59001
2	Number Plate, with numbers **as specified,** includes brackets and bolts, for fastening to bridge	
3	Bolt, ¾″-10 x 2¼″ sq. hd. with sq. nut and washer, for fastening base to bridge	0617 35660 029
4	Hook Bolt, for fastening base to chord of bridge. Includes nut and lock washer. Specify length	635-41
5	Pinnacle Complete, for mast of 5″ dia. pipe	56894 Gr. 2
6	Type SC Color-Light Signal Unit Complete, three-indication, with stepped lens, for side-of-mast mounting. For details and order references, see Plate H2747	59010
6a	as above, except with compound lens. For details and order references, see Plate H2751	59000
7	Mast, of 5″ dia. pipe. Specify length	
8	Base Complete, for mast of 5″ dia. pipe for Fig. B, when signal units are mounted above base	43951-2 Gr. 1
8a	as above, except for use when mast extends through base, for suspended signal units as shown in Fig. C	43951-2 Gr. 2
9	Type SC Color-Light Signal Unit Complete, three-indication, with stepped lens, for top-of-mast mounting. For details and order references, see Plate H2747	59010-1
9a	as above, except with compound lens. For details and order references, see Plate H2751	59000-1

Memoranda

PLATE H2717

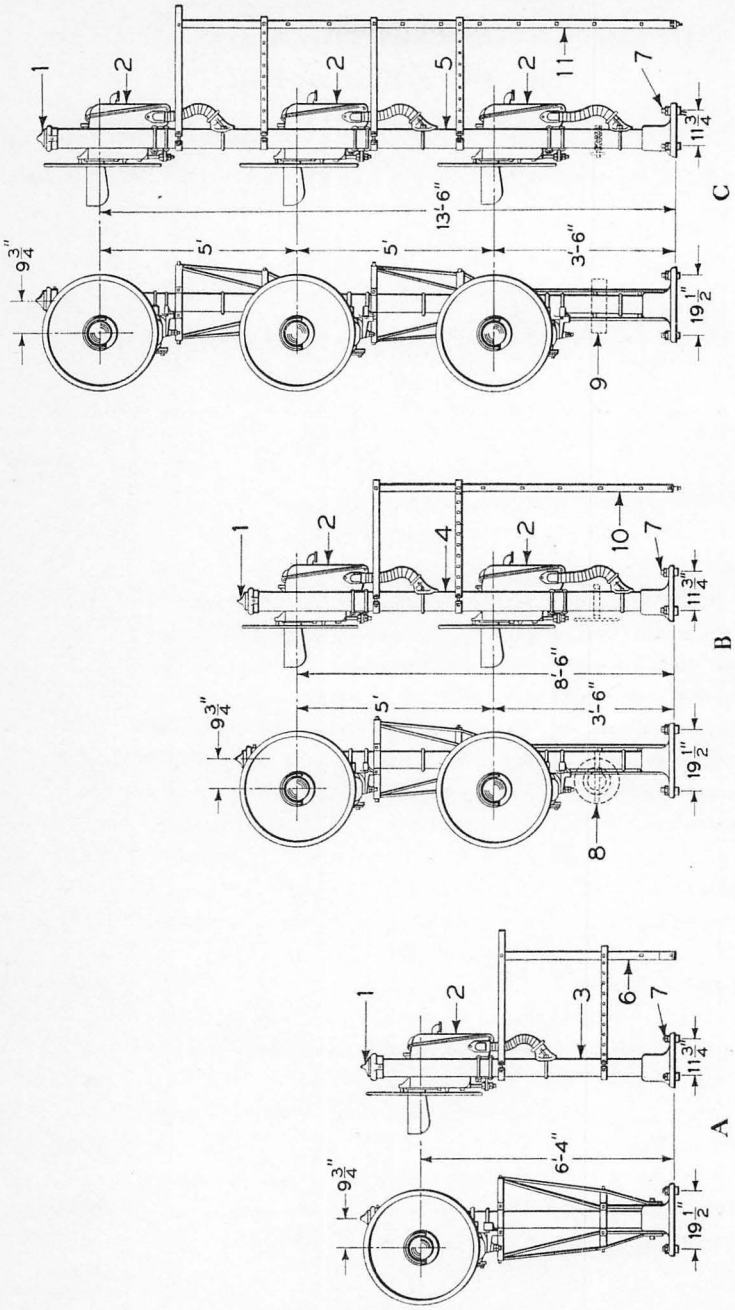

Type SC Color-Light Bracket Signals
One, Two and Three Unit

February 1948 GENERAL RAILWAY SIGNAL COMPANY

Type SC Color-Light Bracket Signals

One, Two and Three Unit

Note: See foreword and general information at the beginning of this part.

See Plate H2747 for signal units with stepped lens and Plate H2751 for signal units with compound lens.

When masts of greater height than those shown are required or if different spacing between lights is required, please specify on order.

Signals will be furnished with masts of 5″ dia. pipe unless otherwise specified.

Drawing references are shown for convenience in checking shipping lists and invoices.

Fig. No.	Name	Drawing Reference
	Order by plate, figure number and name	
A	Type SC Color-Light Bracket Signal Complete, consisting of one three-indication signal unit with stepped or compound lens **as specified,** side-of-mast mounted. Marker, and number plate are not included and must be ordered separately.	
A1	as above, except with signal unit top-of-mast mounted.....	
B	Type SC Color-Light Bracket Signal Complete, consisting of two three-indication signal units with stepped or compound lens **as specified,** side-of-mast mounted. Marker, and number plate are not included and must be ordered separately.	
C	Type SC Color-Light Bracket Signal Complete, consisting of three three-indication signal units with stepped or compound lens **as specified,** side-of-mast mounted. Marker and number plate are not included and must be ordered separately.	
1	Pinnacle Complete, for mast of 5″ dia. pipe.....	56894 Gr. 2
2	Type SC Color-Light Signal Unit Complete, three-indication, with stepped lens, for side-of-mast mounting. For details and order references see Plate H2747.....	59010
2a	as above, except with compound lens. For details and order references see Plate H2751.....	59000
2b	same as Fig. 2, except for top-of-mast mounting, for Fig. A only.....	59010-1
2c	same as Fig. 2a, except for top-of-mast mounting, for Fig. A only.....	59000-1

(*Continued on following page*)

GENERAL RAILWAY SIGNAL COMPANY February 1948

Type SC Color-Light Bracket Signals

One, Two and Three Unit

Drawing references are shown for convenience in checking shipping lists and invoices.

Fig. No.	Name	Drawing Reference
	Order by plate, figure number and name	
3	Mast of 5″ dia. pipe, with base, for Fig. A. Specify length.	
4	Mast of 5″ dia. pipe, with base, for Fig. B. Specify length.	
5	Mast of 5″ dia. pipe, with base, for Fig. C. Specify length.	
6	Ladder Complete, includes handrails, platform, stays, clamps and bolts. For Fig. A	
7	Bolt, 1″ x 4″ sq. hd., with hex. nut and lock washer, for fastening base to bracket	29800 074
8	Grade Marker, for Figs. A, B, and C. Not included with signal complete and must be ordered separately. For fastening to mast of 5″ dia. pipe	53234-3 Gr. 1
9	Number Plate, with numbers **as specified,** includes brackets and bolts for fastening to mast of 5″ dia. pipe. For Figs. A, B, and C. Not included with signal complete and must be ordered separately	21101-10 Gr. 1
10	Ladder Complete, includes handrails, platform, stays, clamps and bolts. For Fig. B	
11	Ladder Complete, includes handrails, platform, stays, clamps and bolts. For Fig. C	

Memoranda

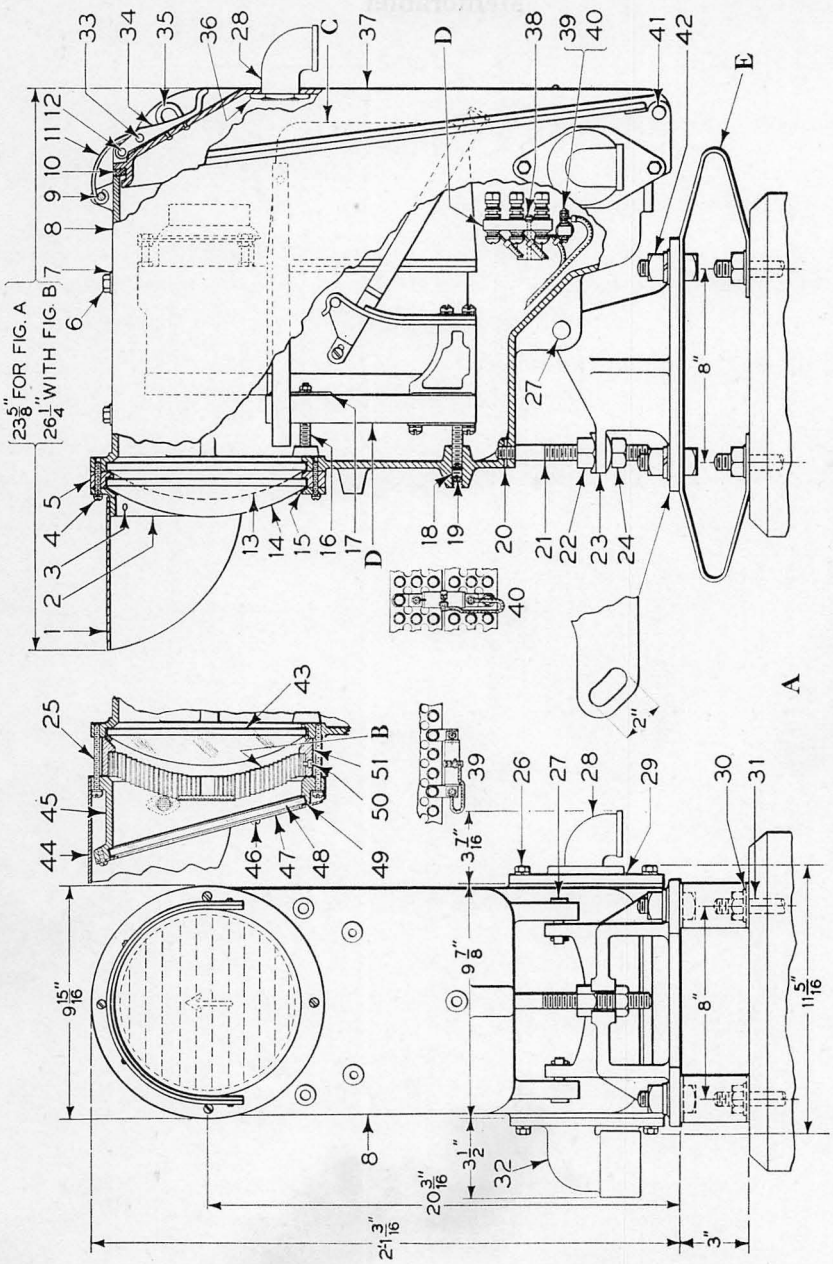

Type SC Color-Light Dwarf Signal With Stepped Lens

February 1948 GENERAL RAILWAY SIGNAL COMPANY

Type SC Color-Light Dwarf Signals

With Stepped Lens

Note: See foreword and general information at the beginning of this part.

When ordering **NEW** dwarf signal units remove a questionnaire found at the beginning of this part, write in information requested and attach to your order.

When ordering complete dwarf signal units for **REPLACEMENT**, give the drawing numbers stamped on housing and mechanism nameplates in addition to the regular catalog references.

Signal units are regularly furnished to give three indications: red, yellow and green. Specify if other color combinations are required.

Lamps, conduits and trunking conduit couplings are not included with signal units and must be ordered separately.

See Section H, Part 39 for order references on lamps and Plate H2759 for various methods of bringing wires into signal units.

Unless otherwise specified anchor bolts as shown will be furnished with signal units complete.

Drawing references are shown for convenience in checking shipping lists and invoices.

Fig. No.	Name	Drawing Reference
	Order by plate, figure number and name	
A	Type SC Color-Light Dwarf Signal Unit Complete, three-indication, equipped with 8 3/8″ dia., 5″ focus, 40-degree deflecting bulls-eye outer lens Fig. 13 and 8 3/8″ dia. 20 degree deflecting outer roundel Fig. 14. This lens combination deflects the main beam through an angle of 20 degrees upward	59011
B	Phankill Unit Complete, for signal unit	56629-6 Gr. 1
C	Mechanism Complete, three-position, polar-neutral. For details and order references see Plate H2763, Fig. B	59070-1
C1	as above, except three-position, neutral-neutral. For details and order references see Plate H2769, Fig. B	59071-1
D	Terminal Board and Plugboard Group Complete, includes single terminal board, plugboard, mechanism locking springs and leads. For details and order references see Plate H2783.	59137

(Continued on following page)

GENERAL RAILWAY SIGNAL COMPANY February 1948

Type SC Color-Light Dwarf Signals

With Stepped Lens

Drawing references are shown for convenience in checking shipping lists and invoices.

Fig. No.	Name	Drawing Reference
	Order by plate, figure number and name	
D1	same as Fig. D except with double terminal board	59137-1
E	Spring Complete, resilient mounting, includes bolts, nuts and washers Fig. 42.	58915 Gr. 1
1	Hood, as shown, 6½″ long	49127-29
2	Bezel Ring, as shown	43983-35
3	Screw, No. 10-32 x ¼″ rd. hd., for fastening hood to bezel ring.	2438-9
4	Screw, $\frac{5}{16}$″-18 x 1½″ rd. hd., with lock washer, for fastening bezel ring Fig. 2 to case	33287-8 0623-1
5	Ring, for use between outer lens and outer roundel	43983-46
6	Screw, ⅜″-16 x ½″ hex. hd., for case	0395-10
7	Lead Washer, ⅛″ th. for screw Fig. 6	19867-2
8	Case Complete, housing for mechanism, includes door with gasket, hasp, strap, track for mechanism and adjusting stud with pin and all riveted parts	59138 Gr. 3
9	Pin, for strap Fig. 11	20127-11
10	Gasket, 4′-10″ lg., for door.	43786-2
11	Strap, for door Fig. 37	30804-14
12	Pin, ¼″ dia. x 2¾″ lg., for hasp	20127-12
13	Outer Lens, 8⅜″ dia., 5″ focus, clear, 40-degree deflecting bulls-eye, which deflects part of the main beam upward through an angle of 40 degrees to one side of the beam axis for close-up indications	36733-7
13a	as above, except with gasket	54193
14	Outer Roundel, 8⅜″ dia., 20-degree deflecting. Deflects part of the main beam through an angle of 20 degrees to one side of the beam axis, for close-up indications.	9238-38
14a	as above, except with gasket	54194 Gr. 1
15	Gasket, for lens and roundel	13014-232
16	Stud, ½″-20, with hex. nut and lock washer, for fastening and adjusting housing plugboard	8885-81 1155-10 0623-1

(Continued on following page)

Type SC Color-Light Dwarf Signals

With Stepped Lens

Drawing references are shown for convenience in checking shipping lists and invoices.

Fig. No.	Name	Drawing Reference
	Order by plate, figure number and name	
17	Strap, for housing plugboard	51432-61
18	Screw, ½″-20, for locking stud Fig. 16	5100-38
19	Plug, for sealing screw Fig. 18	37517-15
20	Taper Pin, No. 2 for fastening stud Fig. 21 to case	28349
21	Stud, for vertical adjustment of signal unit	980-66
22	Nut, ¾″-10 hex. for stud Fig. 21	646-3
23	Base, as shown, for mounting signal unit to spring Fig. E	53070-5
24	Nut, ¾″-10 hex. for stud Fig. 21	0272-1
25	Screw, $\frac{5}{16}$″-18 x 2½″ oval fil. hd. with lock washer, for fastening Phankill unit to case	35788-5 34494-1
26	Screw, $\frac{5}{16}$″-18 x 1″ hex. hd., with lock washer, for fastening cover plate Fig. 29, coupling plate Fig. 29a and coupling Fig. 32 to case	3440-6 0623-1
27	Pin, with cotter, for fastening signal unit to base Fig. 23	730-110 0663-1
28	Ventilator Complete, as shown	52981 Gr. 1
29	Cover Plate, for wire entrance	59215
29a	Coupling Plate, with 1″ tapped hole, for ventilator	59202-5
30	Washer, for anchor bolt	35703
31	Anchor Bolt, ¾″-10 x 18″, with nut, for fastening signal to foundation	36182
32	Coupling, for wire entrance. For various methods of bringing wires into signal unit see Plate H2759	59202-1
33	Pin, ¼″ dia. x 1½″ lg., for hasp	1870
34	Hasp, for locking door	16110-1
35	Staple, for hasp	16914-1
36	Lock Nut, for ventilator	0359
37	Door Complete, includes gasket, hasp, strap and all riveted parts	59121 Gr. 4
38	Screw, No. 10-32 x ⅞″ fil. hd., with washer, for fastening terminal board to case	12563-9 53029-3

(Continued on following page)

GENERAL RAILWAY SIGNAL COMPANY February 1948

Type SC Color-Light Dwarf Signals

With Stepped Lens

Drawing references are shown for convenience in checking shipping lists and invoices.

Fig. No.	Name	Drawing Reference
	Order by plate, figure number and name	
39	Resistance Unit Complete, approx. 1 ohm resistance, 2.5 amps. maximum. For mounting on single terminal board	55945-2 Gr. 1
39a	as above, except approx. 2 ohms resistance, 1.75 amps. maximum	55945-2 Gr. 2
39b	same as Fig. 39, except approx. 5 ohms resistance, 1 amp. maximum	55945-2 Gr. 3
40	Resistance Unit Complete, approx. 1 ohm resistance, 2.5 amps. maximum. For mounting on double terminal board	55945-3 Gr. 1
40a	as above, except approx. 2 ohms resistance, 1.75 amps. maximum	55945-3 Gr. 2
40b	same as Fig. 40 except approx. 5 ohms resistance, 1 amp. maximum	55945-3 Gr. 3
41	Hinge Pin, with cotter, for door	730-108 0663-1
42	Bolt, ¾″-10 x 2″ sq. hd., with sq. nut and washers, for fastening signal to resilient mounting	020 35703 029
43	Outer Lens, 8⅜″ dia., 5″ focus, clear, for use with Phankill unit (No hot-spot center)	36733-2
43a	as above, except with gasket	
44	Hood, 8″ long, for use with Phankill unit	49127-55
45	Ring, for flat roundel	56956
46	Screw, No. 10-32 x ½″ rd. hd., with lock washer, for fastening ring Fig. 47 to ring Fig. 45	2438-1 34494-1
47	Ring, for flat roundel	2254-2
48	Flat Roundel, clear, 20 degree deflecting	54264-4
48a	as above, except 10 degree deflecting	54264-5
49	Gasket, for flat roundel	13014-57
50	Set Screw No. 14-24, for locking Phankill unit in ring Fig. 51	390-14
51	Ring, for holding Phankill unit	43983-81

Memoranda

PLATE H2729

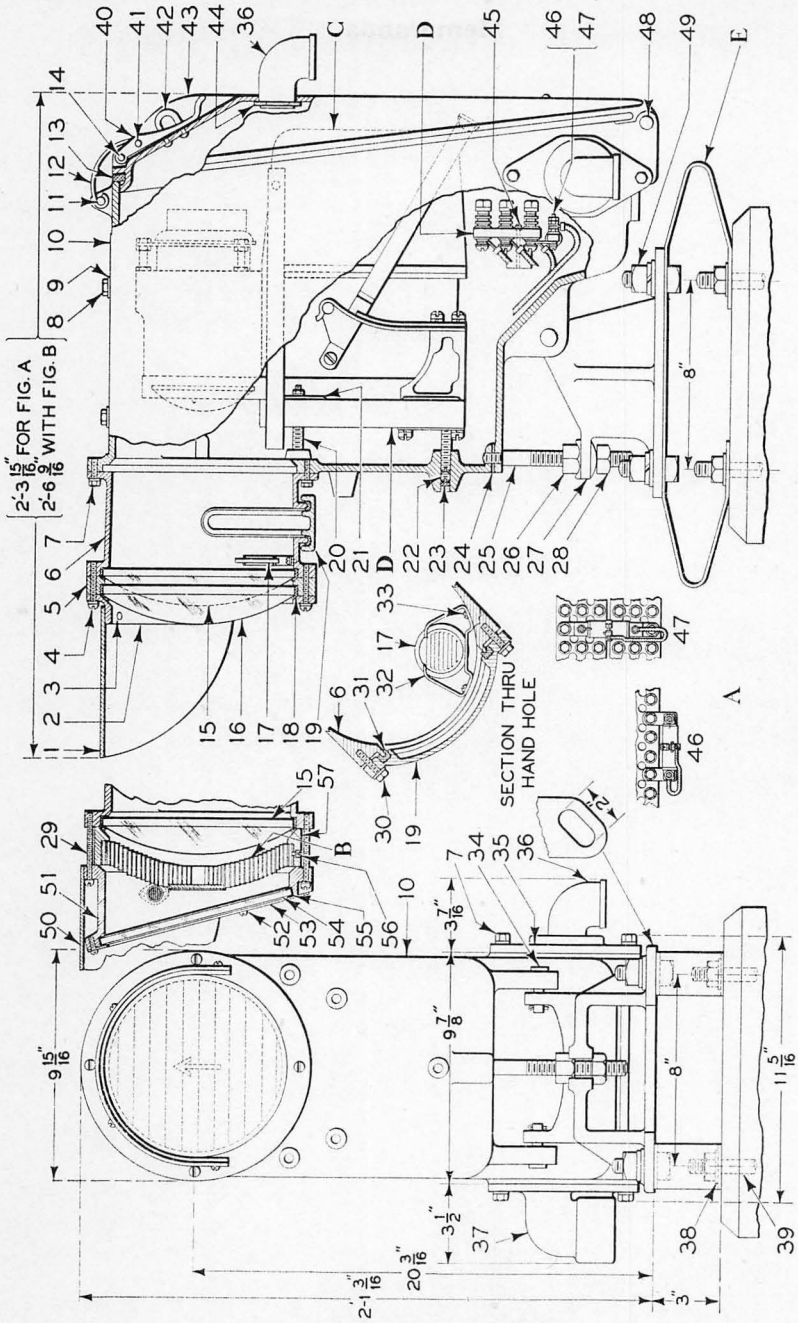

Type SC Color-Light Dwarf Signal with Compound Lens

February 1948 GENERAL RAILWAY SIGNAL COMPANY

Type SC Color-Light Dwarf Signals

With Compound Lens

Note: See foreword and general information at the beginning of this part.

When ordering **NEW** dwarf signal units remove a questionnaire found at the beginning of this part, write in information requested and attach to your order.

When ordering complete dwarf signal units for **REPLACEMENT**, give the drawing numbers stamped on housing and mechanism nameplates in addition to the regular catalog references.

Signal units are regularly furnished to give three indications: red, yellow and green. Specify if other color combinations are required.

Compound lens signal units are regularly assembled with a 2¼″ diameter, roundel Fig. 17 having 40 degree deflecting prisms, set to deflect directly upward for close-up indication. This roundel may be rotated to change this angle as conditions require. When Phankill unit Fig. B is used roundel Fig. 17 is omitted.

Lamps, conduits and trunking conduit couplings are not included with signal units and must be ordered separately.

See Section H Part 39 for order references on lamps, and Plate H2759 for various methods of bringing wires into signal units.

Unless otherwise specified, anchor bolts as shown will be furnished with signal units complete.

Drawing references are shown for convenience in checking shipping lists and invoices.

Fig. No.	Name	Drawing Reference
	Order by plate, figure number and name	
A	Type SC Color-Light Dwarf Signal Unit Complete, three-indication, equipped with 8⅜″ dia., 11½″ focus, plano-convex outer lens Fig. 15 and 8⅜″ dia. 20-degree deflecting outer roundel Fig. 16. This lens combination deflects the main beam through an angle of 20 degrees upward.....	59001
B	Phankill Unit Complete, for signal.....	56629-6 Gr. 1
C	Mechanism Complete, three-position, polar-neutral. For details and order references see Plate H2763, Fig. A.....	59060-1

(Continued on following page)

GENERAL RAILWAY SIGNAL COMPANY February 1948

Type SC Color-Light Dwarf Signals

With Compound Lens

Drawing references are shown for convenience in checking shipping lists and invoices.

Fig. No.	Name	Drawing Reference
	Order by plate, figure number and name	
C1	same as Fig. C, except three-position, neutral-neutral. For details and order references see Plate H2769, Fig. A	59061-1
D	Terminal Board and Plugboard Group Complete, includes single terminal board, plugboard, mechanism locking springs and leads. For details and order references see Plate H2783.	59137
D1	as above, except with double terminal board	59137-1
E	Spring Complete, resilient mounting, includes bolts, nuts and washers Fig. 49	58915 Gr. 1
1	Hood, as shown, 6½″ long	49127-29
2	Bezel Ring, as shown	43983-35
3	Screw, No. 10-32 x ¼″ rd. hd., for fastening hood to bezel ring	2438-9
4	Screw, $\frac{5}{16}$″-18 x 1½″ rd. hd., with lock washer for fastening bezel ring Fig. 2 to case	33287-8 0623-1
5	Ring, for use between outer lens and outer roundel	43983-46
6	Adapter, as shown	54243-6
7	Screw, $\frac{5}{16}$″-18 x 1″ hex. hd., with lock washer, for fastening adapter to case, also used for fastening Figs. 35, 35a and 37 to case	3440-6 0623-1
8	Screw, ⅜″-16 x ½″ hex. hd., for case	0395-10
9	Lead Washer, ⅛″ th., for screw Fig. 8	19867-2
10	Case Complete, housing for mechanism, includes door with gasket, hasp, strap and cotter pins, track for mechanism and adjusting stud with pin and all riveted parts	59138 Gr. 3
11	Pin, for strap Fig. 12	20127-11
12	Strap, for door Fig. 43	30804-14
13	Gasket, 4′-10″ lg., for door	43786-2
14	Pin, ¼″ dia. x 2¾″ lg., for hasp	20127-12
15	Outer Lens, 8⅜″ dia., 11½″ focus, plano-convex	54249-2
15a	as above, except with gasket	54193-2

(Continued on following page)

February 1948 GENERAL RAILWAY SIGNAL COMPANY

Type SC Color-Light Dwarf Signals

With Compound Lens

Drawing references are shown for convenience in checking shipping lists and invoices.

Fig. No.	Name	Drawing Reference
	Order by plate, figure number and name	
16	Outer Roundel, 8⅜″ dia., 20-degree deflecting. Deflects the main beam through an angle of 20 degrees to one side of the beam axis, for close-up indications	9238-38
16a	as above, except with gasket	54194
17	Roundel, 2¼″ dia., with deflecting prisms	54264
18	Gasket, for lens and roundel	13014-232
19	Cover, for handhole	49584-9
20	Stud, ½″-20, with hex. nut and lock washer, for fastening and adjusting housing plugboard	8885-81 1155-10 0623-1
21	Strap, for housing plugboard	51432-61
22	Screw, ½″-20, for locking stud Fig. 20	5100-38
23	Plug, ½″ dia., for sealing screw Fig. 22	37517-15
24	Taper Pin, No. 2, for fastening stud Fig. 25 to case	28349
25	Stud, for vertical adjustment of signal unit	980-66
26	Nut, ¾″-10 hex., for stud Fig. 25	646-3
27	Base, as shown, for mounting signal unit to spring Fig. E	53070-5
28	Nut, ¾″-10 hex., for stud Fig. 25	0272-1
29	Screw, $\frac{5}{16}$″-18 x 2½″ oval fil. hd., with lock washer, for fastening Phankill Unit to case	35788-5 34494-1
30	Screw, ¼″-20 x 1¼″ hex. hd., with lock washer, for handhole cover	15686-1 0510-1
31	Gasket, $\frac{7}{16}$″ dia., x 17″ long, for handhole cover	43460
32	Holder, for roundel Fig. 17	54248-1
33	Screw, No. 8-32 x ¼″ rd. hd., with lock washer, for fastening roundel holder Fig. 32 to adapter	2553-7 43058-1
34	Pin, with cotter, for fastening signal unit to base Fig. 27	730-110 0663-1
35	Cover Plate, for wire entrance	59215
35a	Coupling Plate, with 1″ tapped hole for ventilator	59202-5
36	Ventilator Complete, as shown	52981 Gr. 1

(Continued on following page)

GENERAL RAILWAY SIGNAL COMPANY February 1948

Type SC Color-Light Dwarf Signals

With Compound Lens

Drawing references are shown for convenience in checking shipping lists and invoices.

Fig. No.	Name	Drawing Reference
	Order by plate, figure number and name	
37	Coupling, for wire entrance. For various methods of bringing wires into signal unit, see Plate H2759	59202-1
38	Washer, for anchor bolt	35703
39	Anchor Bolt, ¾″-10 x 18″ with nut, for fastening signal to foundation	36182
40	Hasp, for locking door	16110-1
41	Pin, ¼″ dia. x 1½″ lg., for hasp	1870
42	Staple, for hasp	16914-1
43	Door Complete, includes gasket, hasp, strap and all riveted parts. Does not include ventilator	59121 Gr. 4
44	Lock Nut, for ventilator	0359
45	Screw, No. 10-32 x ⅞″ fil. hd., with washer, for fastening terminal board to case	12563-9 53029-3
46	Resistance Unit Complete, approx. 1 ohm resistance, 2.5 amps. maximum. For mounting on single terminal board	55945-2 Gr. 1
46a	as above, except approx. 2 ohms resistance, 1.75 amps. maximum	55945-2 Gr. 2
46b	same as Fig. 46 except 5 ohms resistance, 1 amp. maximum	55945-2 Gr. 3
47	Resistance Unit Complete approx. 1 ohm resistance, 2.5 amps. maximum. For mounting on double terminal board	55945-3 Gr. 1
47a	as above, except approx. 2 ohms resistance, 1.75 amps. maximum	55945-3 Gr. 2
47b	same as Fig. 47 except 5 ohms resistance, 1 amp. maximum	55945-3 Gr. 3
48	Hinge Pin, with cotter, for door	730-108 0663-1
49	Bolt, ¾″-10 x 2″ sq. hd., with sq. nut, and washers, for fastening signal to resilient mounting	020 35703 029
50	Hood, 8″ long, for use with Phankill unit	49127-55
51	Ring, for flat roundel	56956

(Continued on following page)

February 1948 GENERAL RAILWAY SIGNAL COMPANY

Type SC Color-Light Dwarf Signals

With Compound Lens

Drawing references are shown for convenience in checking shipping lists and invoices.

Fig. No.	Name	Drawing Reference
	Order by plate, figure number and name	
52	Screw, No. 10-32 x ½″ rd. hd., with lock washer, for fastening ring Fig. 53 to ring Fig. 51	2438-1 34494-1
53	Ring, for flat roundel	2254-2
54	Flat Roundel, clear, 20 degree deflecting	54264-4
54a	as above, except 10 degree deflecting	54264-5
55	Gasket, for flat roundel	13014-57
56	Set Screw, No. 14-24 for locking Phankill unit in ring Fig. 57	390-14
57	Ring, for holding Phankill unit	43983-81

PLATE H2733

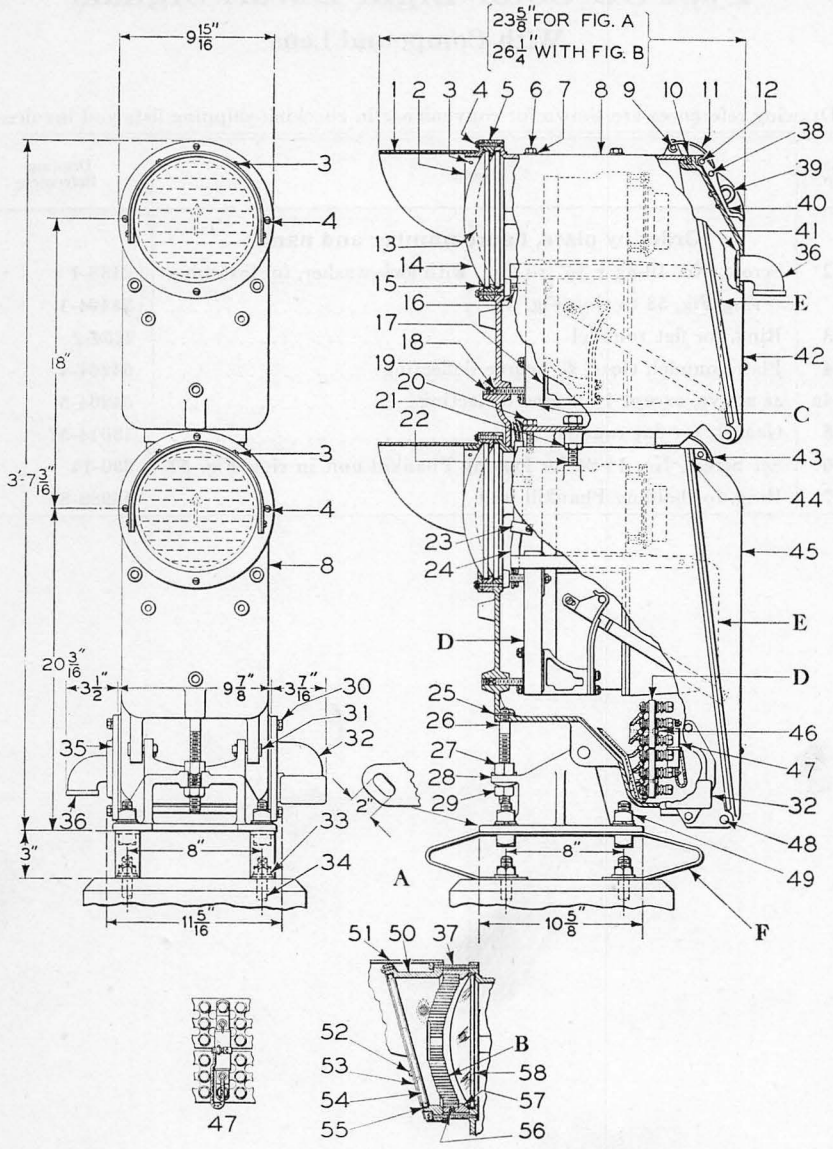

Type SC Color-Light Dwarf Signal
With Stepped Lens
Two Unit

February 1948 GENERAL RAILWAY SIGNAL COMPANY

Type SC Color-Light Dwarf Signals

With Stepped Lens
Two Unit

Note: See foreword and general information at the beginning of this part.

When ordering **NEW** dwarf signal units, remove a questionnaire found at the beginning of this part, write in information requested and attach to your order.

When ordering complete dwarf signal units for **REPLACEMENT**, give the drawing numbers stamped on housing and mechanism nameplates in addition to the regular catalog references.

As there are only 48 terminal posts available on a two arm signal to bring out all control, light and contact wires, consideration must be given to the number of contacts to be utilized.

Signal units are regularly furnished to give three indications: red, yellow and green. Specify if other color combinations are required.

Lamps, conduits and trunking conduit couplings are not included with signal units and must be order separately.

See Section H, Part 39 for order references on lamps and Plate H2759 for various methods of bringing wires into signal units.

Unless otherwise specified anchor bolts as shown will be furnished with signal units complete.

Drawing references are shown for convenience in checking shipping lists and invoices.

Fig. No.	Name	Drawing Reference
	Order by plate, figure number and name	
A	Type SC Color-Light Dwarf Signal Unit Complete, two unit, three-indication. Both units equipped with 8 3/8″ dia., 5″ focus, 40-degree deflecting bulls-eye outer lens Fig. 13 and 8 3/8″ dia., 20-degree deflecting outer roundel Fig. 14. This lens combination deflects the main beam through an angle of 20 degrees upward	59012
B	Phankill Unit Complete, for signal	56629-6 Gr. 1
C	Plugboard Group Complete, for upper unit, includes plug-board, mechanism locking springs and leads. For details and order references see Plate H2783	59137

(Continued on following page)

GENERAL RAILWAY SIGNAL COMPANY February 1948

Type SC Color-Light Dwarf Signals

With Stepped Lens
Two Unit

Drawing references are shown for convenience in checking shipping lists and invoices.

Fig. No.	Name	Drawing Reference
	Order by plate, figure number and name	
D	Terminal Board and Plugboard Group Complete, for lower unit includes double terminal board, plugboard, mechanism locking springs and leads. For details and order references see Plate H2783	59137-1
E	Mechanism Complete, three-position polar-neutral. For details and order references see Plate H2763, Fig. B	59070-1
E1	as above, except three-position, neutral-neutral. For details and order references see Plate H2769 Fig. B	59071-1
F	Spring Complete, resilient mounting, includes bolts, nuts and washers Fig. 49	58915 Gr. 2
1	Hood, as shown, 6½″ long	49127-29
2	Bezel Ring, as shown	43983-35
3	Screw, No. 10-32 x ¼″ rd. hd., for fastening hood to ring.	2438-9
4	Screw, $\frac{5}{16}$″-18 x 1½″ rd. hd., with lock washer, for fastening bezel ring Fig. 2 to case	33287-8 0623-1
5	Ring, for use between outer lens and outer roundel	43983-46
6	Screw, ⅜″-16 x ½″ hex. hd., for case	0395-10
7	Lead Washer, ⅛″ th., for screw Fig. 6	19867-2
8	Case Complete, housing for mechanisms, includes upper and lower case, tracks for mechanisms, doors with gaskets, hasps, straps, adjusting stud with pin and all riveted parts	59138-1 Gr. 1
9	Pin, ¼″ dia. x 2⅛″ lg., for strap Fig. 11	20127-11
10	Gasket, 3′-10½″ lg., for upper door	43786-2
11	Strap, for upper door	30804-14
12	Pin, ¼″ dia. x 2¾ lg., for hasp	20127-12
13	Outer Lens, 8⅜″ dia. 5″ focus, clear, 40-degree deflecting bullseye, which deflects part of the main beam upward through an angle of 40 degrees to one side of the beam axis for close-up indications	36733-7
13a	as above, except with gasket	54193

(*Continued on following page*)

February 1948 GENERAL RAILWAY SIGNAL COMPANY

Type SC Color-Light Dwarf Signals

With Stepped Lens
Two Unit

Drawing references are shown for convenience in checking shipping lists and invoices.

Fig. No.	Name	Drawing Reference
	Order by plate, figure number and name	
14	Outer Roundel, 8⅜″ dia., 20-degree deflecting. Deflects the main beam through an angle of 20 degrees to one side of the beam axis. For close-up indication	9238-38
14a	as above, except with gasket	54194
15	Gasket, for lens and roundel	13014-232
16	Stud, ½″-20, with hex. nut and lock washer, for fastening and adjusting housing plugboards	8885-81 1155-10 0623-1
17	Strap, for housing plugboards	51432-61
18	Screw, ½″-20, for locking stud Fig. 16	5100-38
19	Lead Plug, ½″ dia., for sealing screw Fig. 18	37517-15
20	Screw, ⅜″-16 x 1¾″ hex. hd., with lock washer, for fastening upper unit to lower unit	6983-1 0569-1
21	Nut, ½″-13 x ½″ hex. for screw Fig. 22	26747
22	Screw, ½″-13 x 2¼″ hex. hd., for adjusting upper signal unit	5190-6
23	Clip, with screw and washer, for insulating sleeve	51068-16 3044-5 53029-3
24	Sleeve, ⅝″ I.D. for insulating mechanism leads	55557-8
25	Taper Pin, No. 2, for fastening stud Fig. 26 to case	28349
26	Stud, for vertical adjustment of signal unit	980-66
27	Nut, ¾″-10 hex., for stud Fig. 26	646-3
28	Base, as shown, for mounting signal unit to spring Fig. F	53070-5
29	Nut, ¾″-10 hex., for stud Fig. 26	0272-1
30	Screw, $\frac{5}{16}$″-18 x 1″ hex. hd., with lock washer, for fastening cover plate Fig. 35 coupling plate Fig. 35a and coupling Fig. 32 to case	3440-6 0623-1
31	Pin, with cotter, for fastening signal unit to base Fig. 28	730-110 0663-1

(*Continued on following page*)

GENERAL RAILWAY SIGNAL COMPANY February 1948

Type SC Color-Light Dwarf Signals

With Stepped Lens
Two Unit

Drawing references are shown for convenience in checking shipping lists and invoices.

Fig. No.	Name	Drawing Reference
	Order by plate, figure number and name	
32	Coupling, for wire entrance. For various methods of bringing wires into signal unit, see Plate H2759	59202-1
33	Washer, for anchor bolt	35703
34	Anchor Bolt, ¾″-10 x 18″, with nut for fastening signal to foundation	36182
35	Cover Plate, for wire entrance	59215
35a	Coupling Plate, with 1″ tapped hole for ventilator	59202-5
36	Ventilator Complete, as shown	52981 Gr. 1
37	Screw, 5/16″-18 x 2½″ oval fil. hd., with lock washer, for fastening Phankill Unit to case	35788-5 34494-1
38	Pin, ¼″ dia. x 1½″ lg., for hasp	1870
39	Staple, for hasp	16914-1
40	Hasp, for door	16110-1
41	Lock Nut, for door ventilator	0359
42	Door Complete, for upper case	59121 Gr. 3
43	Strap, for lower door	30804-21
44	Gasket, 4′-10″ lg., for lower door	43786-2
45	Door Complete, for lower case	59121 Gr. 2
46	Screw, No. 10-32 x ⅞″ fil. hd., with washer, for fastening terminal board to case	12563-9 53029-3
47	Resistance Unit Complete, approx. 1 ohm resistance, 2.5 amps. maximum	55945-5 Gr. 1
47a	as above, except approx. 2 ohms resistance, 1.75 amps. maximum	55945-5 Gr. 2
47b	same as Fig. 47 except approx. 5 ohms resistance, 1 amp. maximum	55945-5 Gr. 3
48	Hinge Pin, with cotter, for door	730-108 0663-1
49	Bolt, ¾″-10 x 2″ sq. hd., with sq. nut and washers, for fastening signal to resilient mounting	020 35703 029

(*Continued on following page*)

February 1948 GENERAL RAILWAY SIGNAL COMPANY

Type SC Color-Light Dwarf Signals

With Stepped Lens
Two Unit

Drawing references are shown for convenience in checking shipping lists and invoices.

Fig. No.	Name	Drawing Reference
	Order by plate, figure number and name	
50	Ring, for flat roundel	56956
51	Hood, 8″ long, for use with Phankill Unit	49127-55
52	Screw, No. 10-32 x ½″ rd. hd., with lock washer, for fastening ring Fig. 53 to ring Fig. 50	2438-1 34494-1
53	Ring, for flat roundel	2254-2
54	Flat Roundel, clear, 20 degree deflecting	54264-4
54a	as above, except 10 degree deflecting	54264-5
55	Gasket, for flat roundel	13014-57
56	Set Screw, No. 14-24 for locking Phankill unit in ring Fig. 57	390-14
57	Ring, for holding Phankill unit	43983-81
58	Outer Lens, 8⅜″ dia., 5″ focus, clear, for use with Phankill unit (No hot-spot center)	36733-2
58a	as above, except with gasket	

PLATE H2737

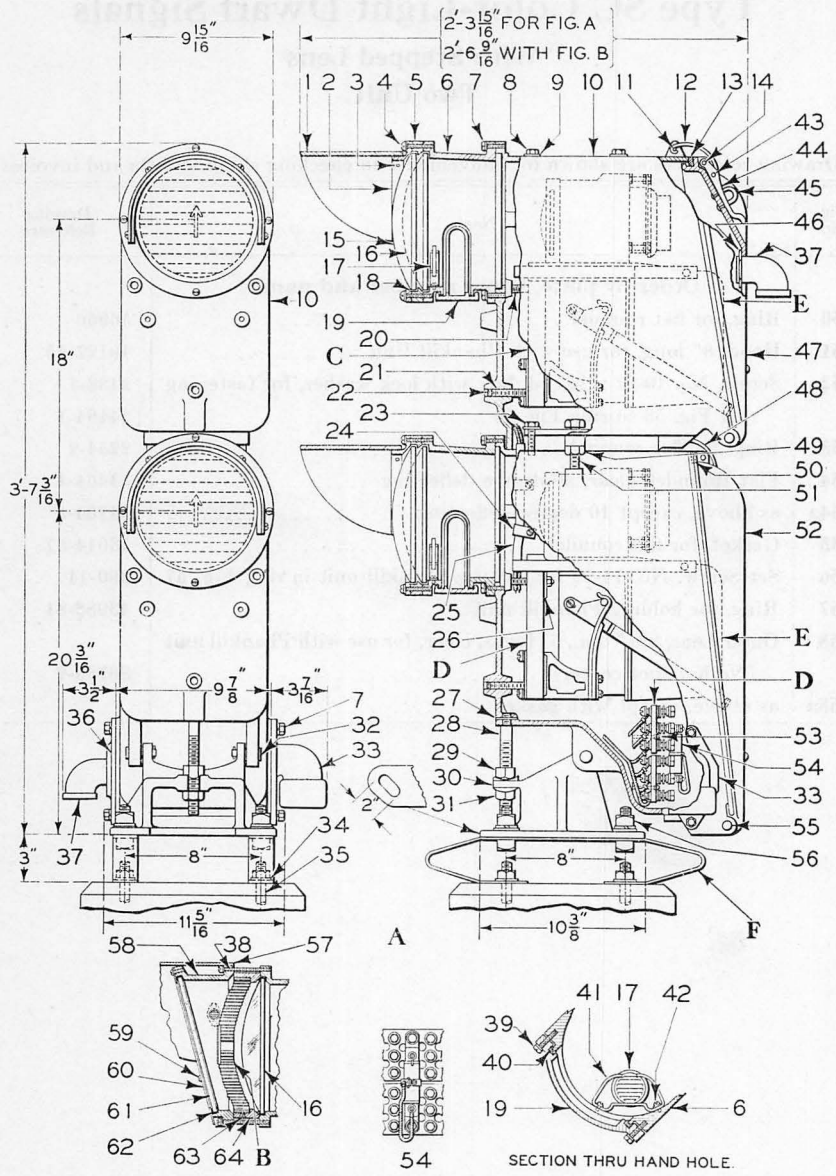

Type SC Color-Light Dwarf Signal
With Compound Lens
Two Unit

February 1948 GENERAL RAILWAY SIGNAL COMPANY

Type SC Color-Light Dwarf Signals

With Compound Lens
Two Unit

Note: See foreword and general information at the beginning of this part.

When ordering **NEW** dwarf signal units, remove a questionnaire found at the beginning of this part, write in the information requested and attach to your order.

When ordering complete dwarf signal units for **REPLACEMENT**, give the drawing numbers stamped on housing and mechanism nameplates in addition to the regular catalog references.

As there are only 48 terminal posts available on a two arm signal to bring out all control, light and contact wires, consideration must be given to the number of contacts to be utilized.

Signal units are regularly furnished to give three indications: red, yellow and green. Specify if other color combinations are required.

Compound lens signal units are regularly assembled with a 2¼″ diameter roundel Fig. 17, having 40 degree deflecting prisms, set to deflect directly upward for close-up indications. The roundel may be rotated to change this angle as conditions require. When Phankill Unit Fig. B is used roundel Fig. 17 is omitted.

Lamps, conduits and trunking conduit couplings are not included with signal units and must be ordered separately.

See Section H, Part 39 for order references on lamps and Plate H2759 for various methods of bringing wires into signal units.

Unless otherwise specified, anchor bolts as shown will be furnished with signal units complete.

Drawing references are shown for convenience in checking shipping lists and invoices.

Fig. No.	Name	Drawing Reference
	Order by plate, figure number and name	
A	Type SC Color-Light Dwarf Signal Unit Complete, three-indication. Both units equipped with 8⅜″ dia, 11½″ focus, plano-convex outer lens Fig. 16 and 8⅜″ dia. 20 degree deflecting outer roundel Fig. 15. This lens combination deflects the main beam through an angle of 20 degrees upward.....	59002

(Continued on following page)

GENERAL RAILWAY SIGNAL COMPANY February 1948

Type SC Color-Light Dwarf Signals

With Compound Lens
Two Unit

Drawing references are shown for convenience in checking shipping lists and invoices.

Fig. No.	Name	Drawing Reference
	Order by plate, figure number and name	
B	Phankill Unit Complete, for signal	56629-6 Gr. 1
C	Plugboard Group Complete, for upper unit, includes plugboard, mechanism locking springs and leads. For details and order references see Plate H2783	59137
D	Terminal Board and Plugboard Group Complete, for lower unit, includes double terminal board, plugboard, mechanism locking springs and leads. For details and order references see Plate H2783	59137-1
E	Mechanism Complete, three-position, polar-neutral. For details and order references see Plate H2763, Fig. A	59060-1
E1	as above, except three-position, neutral-neutral. For details and order references see Plate H2769, Fig. A	59061-1
F	Spring Complete, resilient mounting, includes bolts, nuts and washers, Fig. 56	58915 Gr. 2
1	Hood, as shown, 6½″ long	49127-29
2	Bezel Ring, as shown	43983-35
3	Screw No. 10-32 x ¼″ rd. hd., for fastening hood to bezel ring	2438-9
4	Screw, $\frac{5}{16}$″-18 x 1½″ rd. hd., with lock washer, for fastening bezel ring Fig. 2 to case	33287-8 0623-1
5	Ring, for use between outer lens and outer roundel	43983-46
6	Adapter, as shown	54243-6
7	Screw, $\frac{5}{16}$″-18 x 1″ hex. hd., with lock washer, for fastening adapter to case. Also used for fastening Figs. 33, 36 and 36a to case	3440-6 0623-1
8	Screw, ⅜″-16 x ½″ hex. hd., for case	0395-10
9	Lead Washer, ⅛″ th., for screw Fig. 8	19867-2
10	Case Complete, housing for mechanisms, includes upper and lower case, tracks for mechanisms, doors with gaskets, hasps, straps, adjusting stud with pin, and all riveted parts	59138-1 Gr. 1
11	Pin, ¼″ dia., x 2⅛″ lg., for strap Fig. 12	20127-11

(*Continued on following page*)

Type SC Color-Light Dwarf Signals

With Compound Lens
Two Unit

Drawing references are shown for convenience in checking shipping lists and invoices.

Fig. No.	Name	Drawing Reference
	Order by plate, figure number and name	
12	Strap, for upper door	30804-14
13	Gasket, 3'-10½" lg., for upper door	43786-2
14	Pin, ¼" dia., x 2¾" lg., for hasp	20127-12
15	Outer Roundel, 8⅜" dia., 20 degree deflecting. Deflects the main beam through an angle of 20 degrees to one side of the beam axis, for close-up indication	9238-38
15a	as above, except with gasket	54194
16	Outer Lens, 8⅜" dia., 11½" focus, plano-convex	54249-2
16a	as above, except with gasket	54193-2
17	Roundel, 2¼" dia., with 40-degree deflecting prisms	54264
18	Gasket, for outer lens and outer roundel	13014-232
19	Cover, for handhole	49584-9
20	Stud, ½"-20, with hex. nut and lock washer, for fastening and adjusting housing plugboards	8885-81 1155-10 0623-1
21	Screw, ½"-20, for locking stud Fig. 20	5100-38
22	Lead Plug, ½" dia., for sealing screw Fig. 21	37517-15
23	Screw, ⅜"-16 x 1¾" hex. hd., with lock washer, for fastening upper unit to lower unit	6983-1 0569-1 51068-16
24	Clip, with screw and washer, for insulating sleeve	3044-5 53029-3
25	Sleeve, ⅝" I.D., for insulating mechanism leads	55557-8
26	Strap, for housing plugboards	51432-61
27	Taper Pin No. 2, for fastening stud Fig. 28 to case	28349
28	Stud, for vertical adjustment of signal unit	980-66
29	Nut, ¾"-10 hex., for stud Fig. 28	646-3
30	Base, as shown, for mounting signal unit to spring Fig. E	53070-5
31	Nut, ¾"-10 hex., for stud Fig. 28	0272-1

(Continued on following page)

GENERAL RAILWAY SIGNAL COMPANY February 1948

Type SC Color-Light Dwarf Signals

With Compound Lens
Two Unit

Drawing references are shown for convenience in checking shipping lists and invoices.

Fig. No.	Name	Drawing Reference
	Order by plate, figure number and name	
32	Pin, with cotter, for fastening signal unit to base Fig. 30	730-110 0663-1
33	Coupling, for wire entrance. For various methods of bringing wires into signal unit see Plate H2759	59202-1
34	Washer, for anchor bolt	35703
35	Anchor Bolt, ¾″-10 x 18″, with nut, for fastening signal to foundation	36182
36	Cover Plate, for wire entrance	59215
36a	Coupling Plate, with 1″ tapped hole for ventilator	59202-5
37	Ventilator Complete, as shown	52981 Gr. 1
38	Screw, $\frac{5}{16}$″-18 x 2½″ oval fil. hd., with lock washer, for fastening Phankill Unit to case	35788-5 34494-1
39	Screw, ¼″-20 x 1¼″ hex. hd., with lock washer, for handhole cover	15686-1 0510-1
40	Gasket, $\frac{7}{16}$″ dia. x 17″ lg., for handhole cover	43460
41	Holder, for roundel Fig. 17	54248-1
42	Screw, No. 8-32 x ¼″ rd. hd., with lock washer, for holder Fig. 41	2553-7 43058-1
43	Pin, ¼″ dia. x 1½″ lg., for strap	1870
44	Hasp, for door	16110-1
45	Staple, for hasp	16914-1
46	Lock Nut, for ventilator	0359
47	Door Complete, for upper case	59121 Gr. 3
48	Strap, for lower door	30804-21
49	Nut, ½″-13 x ½″ tk. hex., for screw Fig. 51	26747
50	Gasket, 4′-10″ lg., for lower door	43786-2
51	Screw, ½″-13 x 2¼″ hex. hd., for adjusting upper signal unit.	5190-6
52	Door Complete, for lower case	59121 Gr. 2
53	Screw, No. 10-32 x ⅞″ fil. hd., with washer, for fastening terminal board to case	12563-9 53029-3

(Continued on following page)

February 1948 GENERAL RAILWAY SIGNAL COMPANY

Type SC Color-Light Dwarf Signals

With Compound Lens
Two Unit

Drawing references are shown for convenience in checking shipping lists and invoices.

Fig. No.	Name	Drawing Reference
	Order by plate, figure number and name	
54	Resistance Unit Complete, approx. 1 ohm resistance, 2.5 amps. maximum	55945-5 Gr. 1
54a	as above, except approx. 2 ohms resistance, 1.75 amps. maximum	55945-5 Gr. 2
54b	same as Fig. 54, except approx. 5 ohms resistance, 1 amp. maximum	55945-5 Gr. 3
55	Hinge Pin, with cotter, for door	730-108 0663-1
56	Bolt, ¾″-10 x 2″ sq. hd., with sq. nut and washers, for fastening signal unit to resilient mounting	020 35703 029
57	Hood, 8″ long, for use with Phankill Unit	49127-55
58	Ring, for flat roundel	56956
59	Screw, No. 10-32 x ½″ rd. hd., with lock washer, for fastening ring Fig. 60 to ring Fig. 58	2438-1 34494-1
60	Ring, for flat roundel	2254-2
61	Flat Roundel, clear, 20 degree deflecting	54264-4
61a	as above, except 10 degree deflecting	54264-5
62	Gasket, for flat roundel	13014-57
63	Set Screw, No. 14-24 for locking Phankill Unit in ring Fig. 64	390-14
64	Ring, for holding Phankill Unit	43983-81

PLATE H2747

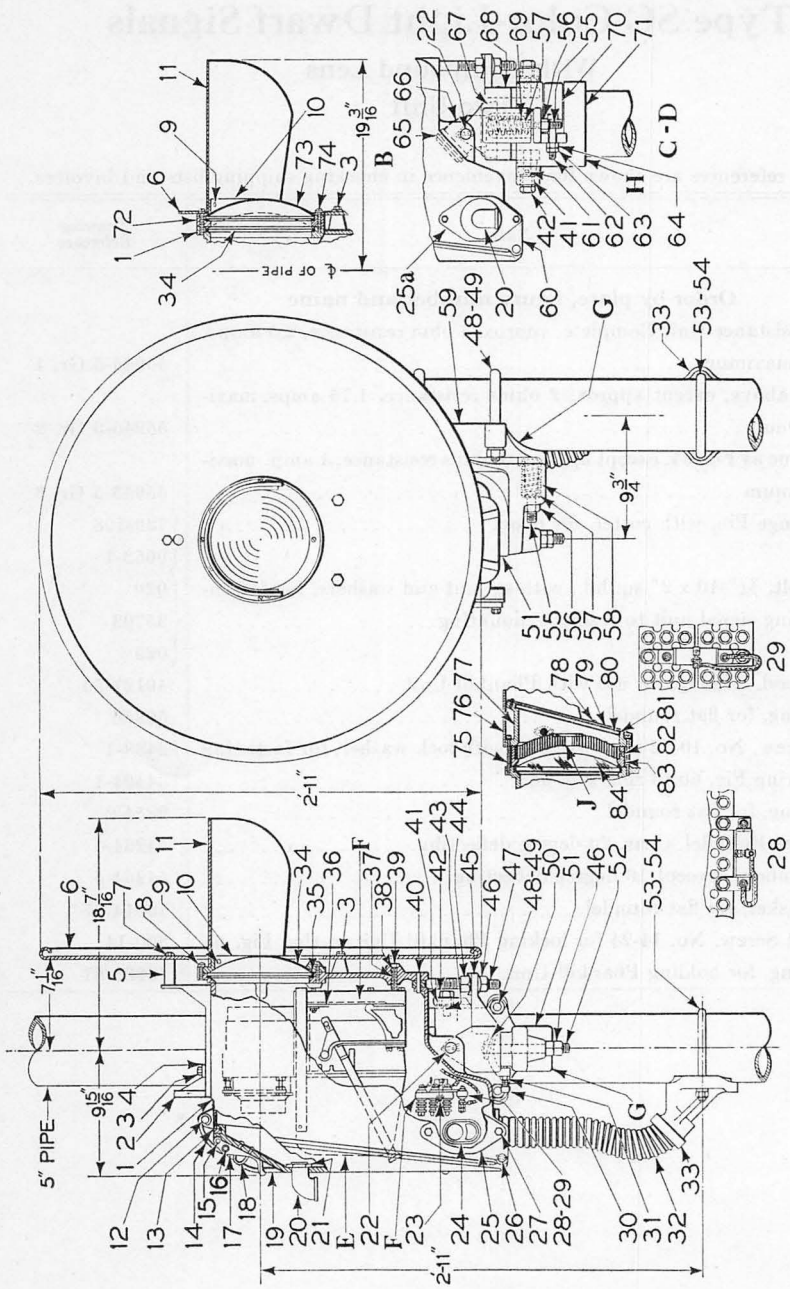

Type SC Color-Light Signal Unit With Stepped Lens

February 1948 GENERAL RAILWAY SIGNAL COMPANY

Type SC Color-Light Signal Units

With Stepped Lens

Note: See foreword and general information at the beginning of this part.

When ordering **NEW** signal units, remove a questionnaire found at the beginning of this part, write in information requested and attach to your order.

When ordering complete signal units for **REPLACEMENT**, give the drawing numbers stamped on housing and mechanism nameplates in addition to the regular catalog references.

Signal units are regularly furnished to give three indications: red, yellow and green. Specify if other color combinations are required.

Stepped lens signal units are regularly assembled with an 8⅜″ diameter, 40-degree deflecting bulls-eye outer lens, Fig. 34 having its secondary beam deflecting downward and to the left, as viewed when facing the lens, at an angle of 30 degrees from the vertical for close-up indications. The lens may be rotated to change the angle of deflection as conditions require.

Lamps are not included with signal units and must be ordered separately. See Section H, Part 39 for order references on lamps.

Refer to Plate H2759 for various methods of bringing wires into signal units.

Drawing references are shown for convenience in checking shipping lists and invoices.

Fig. No.	Name	Drawing Reference
	Order by plate, figure number and name	
A	Type SC Color-Light Signal Unit Complete, for side-of-mast mounting on 5″ dia. pipe, three-indication, equipped with 8⅜″ dia., 5″ focus outer lens Fig. 34. This lens has a 40-degree deflecting bulls-eye moulded in the center which deflects part of the main beam downward through an angle of 40 degrees to one side of the beam axis for close-up indications. For use on tangent track	59010
B	Type SC Color-Light Signal Unit Complete, for side-of-mast mounting on 5″ dia. pipe, three-indication, equipped with 8⅜″ dia., 5″ focus outer lens Fig. 34 having a moulded 40-degree deflecting bulls-eye and 8⅜″ dia., 20-degree deflecting outer roundel Fig. 73. This lens combination deflects the main beam through an angle of 20 degrees to one side of the beam axis. For use on curved track	59010

(Continued on following page)

GENERAL RAILWAY SIGNAL COMPANY February 1948

Type SC Color-Light Signal Units

With Stepped Lens

Drawing references are shown for convenience in checking shipping lists and invoices.

Fig. No.	Name	Drawing Reference
	Order by plate, figure number and name	
B1	same as Fig. B except equipped with 40-degree deflecting outer roundel Fig. 73b. This lens combination deflects the main beam 40 degrees to one side of the beam axis. For use on sharp curves	59010
B2	same as Fig. B, except equipped with 15-degree Spredlite outer roundel Fig. 73d. This lens combination spreads the main beam 7½ degrees to each side of the beam axis for a total of 15 degrees. For use on reverse curves	59010
B3	same as Fig. B, except equipped with 30-degree Spredlite outer roundel Fig. 73f. This lens combination spreads the main beam 15 degrees to each side of the beam axis for a total of 30 degrees. For use on reverse curves, as this lens combination materially reduces the range of the signal	59010
C	Type SC Color-Light Signal Unit Complete, for top-of-mast mounting on 5″ dia. pipe, three indication, equipped with 8⅜″ dia., 5″ focus outer lens Fig. 34. This lens has a 40-degree deflecting bulls-eye moulded in the center which deflects part of the main beam downward through an angle of 40 degrees to one side of the beam axis for close-up indications. For use on tangent track	59010-1
D	Type SC Color-Light Signal Unit Complete, for top-of-mast mounting on 5″ dia. pipe, three indication, equipped with 8⅜″ dia., 5″ focus, outer lens Fig. 34 having a moulded 40-degree deflecting bulls-eye and 8⅜″ dia., 20-degree deflecting outer roundel Fig. 73. This lens combination deflects the main beam through an angle of 20 degrees to one side of the beam axis. For use on curved track	59010-1
D1	as above, except equipped with 40-degree deflecting outer roundel Fig. 73b. This lens combination deflects the main beam 40 degrees to one side of the beam axis. For use on sharp curves	59010-1

(Continued on following page)

February 1948 GENERAL RAILWAY SIGNAL COMPANY

Type SC Color-Light Signal Units

With Stepped Lens

Drawing references are shown for convenience in checking shipping lists and invoices.

Fig. No.	Name	Drawing Reference
	Order by plate, figure number and name	
D2	same as Fig. D, except equipped with 15-degree Spredlite outer roundel Fig. 73d. This lens combination spreads the main beam 7½ degrees to each side of the beam for a total of 15 degrees. For use on reverse curves	59010-1
D3	same as Fig. D, except equipped with 30-degree Spredlite outer roundel Fig. 73f. This lens combination spreads the main beam 15 degrees to each side of the beam axis for a total of 30 degrees. For use on reverse curves only, as this lens combination materially reduces the range of the signal	59010-1
E	Mechanism Complete, three position, polar-neutral. For details and order references, see Plate H2763, Fig. B	59070-1
E1	as above, except three position, neutral-neutral. For details and order reference see Plate H2769, Fig. B	59071-1
F	Terminal Board and Plugboard Group Complete, includes single terminal board, plugboard, mechanism locking springs and leads. For details and order references, see Plate H2783	59137
F1	as above, except with double terminal board	59137-1
G	Resilient Mounting Complete. For mounting signal unit to mast of 5″ or 6″ dia. pipe. For replacing rigid bracket	58859 Gr. 2
G1	as above, except without bracket base Fig. 45, for replacing resilient bracket	58859 Gr. 5
H	Resilient Mounting Complete. For mounting signal unit on top of mast of 5″ dia. pipe	58859-1 Gr. 1
J	Phankill Unit Complete, for signal	56629-2
1	Case Complete, housing for mechanism for side-of-mast mounted signals, includes door with gasket, hasp, strap, track for mechanism, adjusting stud with pin and all riveted parts	59138 Gr. 3
1a	Case Complete, housing for mechanism, with side opening door. For side-of-mast signal. For details and order references, see Plate H2757	59138-2 Gr. 1

(*Continued on following page*)

GENERAL RAILWAY SIGNAL COMPANY February 1948

Type SC Color-Light Signal Units

With Stepped Lens

Drawing references are shown for convenience in checking shipping lists and invoices.

Fig. No.	Name	Drawing Reference
	Order by plate, figure number and name	
2	Sighting Device Complete, as shown	51120-2 Gr. 1
3	Screw, 3/8″-16 x 3/4″ hex. hd., for fastening sighting device and background to case	0395-7
4	Lead Washer, 1/8″ th., for screw Fig. 3	19867-2
5	Spacer, as shown, for background	33645-9
6	Background, 35″ dia., as shown	49162-25
7	Screw, 3/8″-16 x 2 3/4″ hex. hd., with lock washer, for fastening background to sighting device	0430-1 42175
8	Screw, 5/16″-18 x 3/4″ rd. hd., with lock washer, for fastening bezel ring Fig. 10 to case	33287-6 0623-1
9	Screw, No. 10-32 x 1/4″ rd. hd., for fastening hood to case	2438-9
10	Bezel Ring, as shown	43983-35
11	Hood, 12″ long, as shown	49127-19
12	Pin, 1/4″ dia. x 2 1/8″ lg., for strap Fig. 14	20127-11
13	Gasket, 4′-10″ lg., for door	43786-2
14	Strap, for door	30804-14
15	Pin, 1/4″ dia. x 2 3/4″ lg., for hasp	20127-12
16	Pin, 1/4″ dia. x 1 1/2″ lg., for hasp	1870
17	Hasp, for locking door	16110-1
18	Staple, for hasp	16914-1
19	Door Complete, includes gasket, hasp, strap and all riveted parts, for Fig. 1	59121 Gr. 4
20	Ventilator, 1″ standard pipe thread	52981 Gr. 1
21	Lock nut, for door ventilator Fig. 20	0359
22	Pin, with cotter, for fastening signal unit to resilient mountings Figs. G and H	730-110 0663-1
23	Screw, No. 10-32 x 7/8″ fil. hd., with lock washer, for fastening terminal board to case	12563-9 53029-3
24	Coupling, for wire entrance, for various methods of bringing wires into signal units, see Plate H2759	59202-1
25	Cover Plate, for wire entrance	59215

(Continued on following page)

February 1948 GENERAL RAILWAY SIGNAL COMPANY

Type SC Color-Light Signal Units

With Stepped Lens

Drawing references are shown for convenience in checking shipping lists and invoices.

Fig. No.	Name	Drawing Reference
	Order by plate, figure number and name	
25a	Coupling Plate with 1″ tapped hole for ventilator	59202-5
26	Hinge Pin, with cotter, for door Fig. 19	730-108 0663-1
27	Screw, $\frac{5}{16}$″-18 x 1″ with lock washer, for fastening cover plate Fig. 25, coupling plate Fig. 25a and coupling Fig. 24 to case	3440-6 0623-1
28	Resistance Unit Complete, approx. 1 ohm resistance, 2.5 amps., maximum. For mounting on single terminal board	55945-2 Gr. 1
28a	as above, except approximately 2 ohms resistance, 1.75 amps., maximum	55945-2 Gr. 2
28b	same as Fig. 28 except 5 ohms resistance, 1 amp., maximum	55945-2 Gr. 3
29	Resistance Unit Complete, approximately 1 ohm resistance, 2.5 amps., maximum. For mounting on double terminal board	55945-3 Gr. 1
29a	as above, except approximately 2 ohms resistance, 1.75 amps,. maximum	55945-3 Gr. 2
29b	same as Fig. 29 except 5 ohms resistance, 1 amp., maximum	55945-3 Gr. 3
30	Screw, ½″-13 x 1½″ sq. hd., for locking signal unit in position	40426
31	Nut, ½″-13 hex., for locking screw Fig. 30 in place	12754
32	Conduit, see Plate H2759 for details and order references	43355-13
33	Coupling, for mounting conduit to 5″ pipe. See Plate H2759	45688-61 Gr. 1
33a	as above, except for 6″ pipe	45688-61 Gr. 2
34	Outer Lens, 8⅜″ dia. 5″ focus, clear with a 40-degree deflecting bulls-eye which deflects part of the main beam downward through an angle of 40 degrees to one side of the beam axis for close-up indications. Regularly assembled in all stepped lens units	36733-7
34a	as above, except with gasket	54193
35	Gasket, for outer lens Fig. 34 and outer roundel Fig. 73	13014-232
36	Strap, for housing plugboard	51432-61
37	Stud, ½″-20, with hex. nut and lock washer, for fastening and adjusting housing plugboard	8885-81 1155-10 0623-1

(*Continued on following page*)

GENERAL RAILWAY SIGNAL COMPANY February 1948

Type SC Color-Light Signal Units

With Stepped Lens

Drawing references are shown for convenience in checking shipping lists and invoices.

Fig. No.	Name	Drawing Reference
	Order by plate, figure number and name	
38	Screw, ½″-20, for locking stud Fig. 37	5100-38
39	Plug, for sealing screw Fig. 38	37517-15
40	Taper Pin, No. 2, for fastening stud Fig. 47 to case	28349
41	Rubber Bushing, for studs Fig. 42	2414-1
42	Stud, as shown, for Figs. G and H	22666-11
43	Taper Pin, No. 3, for use with stud Fig. 42	715-47
44	Nut, ¾″-10 hex., for stud Fig. 47	646-3
45	Bracket Base, for mounting signal unit	53092-3
46	Nut, ¾″-10 hex., for studs Figs. 47 and 52	0272-1
47	Stud, for vertical adjustment of signal unit	980-66
48	U Bolt, for mounting bracket clamp on 5″ pipe	16209-4 Gr. 1
49	as above, except for 6″ pipe	16209-6 Gr. 1
50	Taper Pin, No. 2 x 1½″ long, for fastening stud Fig. 52 to bracket base Fig. 45	46463
51	Bracket Support	53093-10
52	Stud, for horizontal adjustment of signal unit	980-42
53	U Bolt, with nuts and washers, for mounting coupling to 5″ pipe	5183 Gr. 11
54	as above, except for 6″ pipe	5183-7 Gr. 1
55	Stud, for spring seat	980-84
56	Nut, ⅝″-18 for stud Fig. 55	1318-4
57	Spring Seat	56176-19
58	Spring, for side-of-mast resilient mounting	786-268
59	Bracket Clamp	53093-8
60	Case Complete, housing for mechanism includes door with gaskets, hasp, strap, track for mechanism, adjusting stud with pin and all riveted parts, for top-of-mast signals Figs. C and D. Has a $2\frac{7}{16}$″ dia. hole drilled in 45-degree portion of bottom for wire entrance	59138 Gr. 4
60a	as above, except with side opening door. For details and order references see Plate H2757, Fig. A1	

(*Continued on following page*)

Type SC Color-Light Signal Units

With Stepped Lens

Drawing references are shown for convenience in checking shipping lists and invoices.

Fig. No.	Name	Drawing Reference
	Order by plate, figure number and name	
61	Taper Pin, No. 3 x 1¼″	715-27
62	Bolt ½″-13 x 3½″ sq. hd. for clamp Fig. 70	53137
63	Nut, ½″-13 x ¼″ tk. hex., for bolt Fig. 62	7244-1
64	Nut, ½″-13 x ½″ tk. hex., for bolt Fig. 62	26747
65	Lock Nut, 2″, for elbow Fig. 66	0815
66	Elbow, 2″ for wire entrance into case	35132-30
67	Shield, for top-of-mast mounting Fig. H	54733-3
68	Bracket Base, for top-of-mast resilient mounting	53092-4
69	Spring, outer, for top-of-mast resilient mounting	786-273
69a	Spring, Inner, for top-of-mast resilient mounting	786-274
70	Clamp, for top-of-mast resilient mounting	317-28 Gr. 2
71	Socket, for top-of-mast resilient mounting	11660-9
72	Ring, for use between outer lens and outer roundel as shown in Fig. B	43983-46
73	Outer Roundel, 8⅜″ dia., 20-degree deflecting. Deflects main beam through an angle of 20 degrees to one side of the beam axis. For use on curved track	9238-38
73a	as above, except with gasket	54194
73b	same as Fig. 73, except 40-degree deflecting. Deflects main beam through an angle of 40 degrees to one side of the beam axis. For use on sharp curves	9238-53
73c	same as Fig. 73b, except with gasket	54194
73d	same as Fig. 73, except 15-degree Spredlite. Spreads the main beam 7½ degrees to each side of the beam axis for a total of 15 degrees. For use on reverse curves	9238-75
73e	same as Fig. 73d, except with gasket	54194
73f	same as Fig. 73, except 30-degree Spredlite. Spreads the main beam 15 degrees to each side of the beam axis for a total of 30 degrees. For use on reverse curves	53142-1
73g	same as Fig. 73f, except with gasket	54194

(Continued on following page)

GENERAL RAILWAY SIGNAL COMPANY February 1948

Type SC Color-Light Signal Units

With Stepped Lens

Drawing references are shown for convenience in checking shipping lists and invoices.

Fig. No.	Name	Drawing Reference
	Order by plate, figure number and name	
74	Screw, $\frac{5}{16}$″-18 x 1½″ rd. hd., with lock washer, for fastening bezel ring Fig. 10 and ring Fig. 72 to case	33287-8 0623-1
75	Screw, $\frac{5}{16}$″-18 x 2½″ oval fil. hd., with lock washer, for fastening Phankill Unit to case	35788-5 34494-1
76	Hood, 12″ long, for use with Phankill unit	49127-52
77	Ring, for flat roundel	56956
78	Screw, No. 10-32 x ½″ rd. hd., with lock washer, for fastening ring Fig. 79 to ring Fig. 77	2438-1 34494-1
79	Ring, for flat roundel	2254-2
80	Flat Roundel, clear, 20 degree deflecting	54264-4
80a	as above, except 10 degree deflecting	54264-5
80b	same as Fig. 80 except 30 degree spredlite	54264-6
80c	same as Fig. 80, except plain roundel	4679
81	Gasket, for flat roundel	13014-57
82	Set Screw, No. 14-24 for locking Phankill unit in ring Fig. 83	390-14
83	Ring, for holding Phankill unit	43983-81
84	Outer Lens, 8⅜″ dia. 5″ focus, clear, for use with Phankill Unit (No hot-spot center)	36733-2
84a	as above, except with gasket	

Memoranda

PLATE H2751

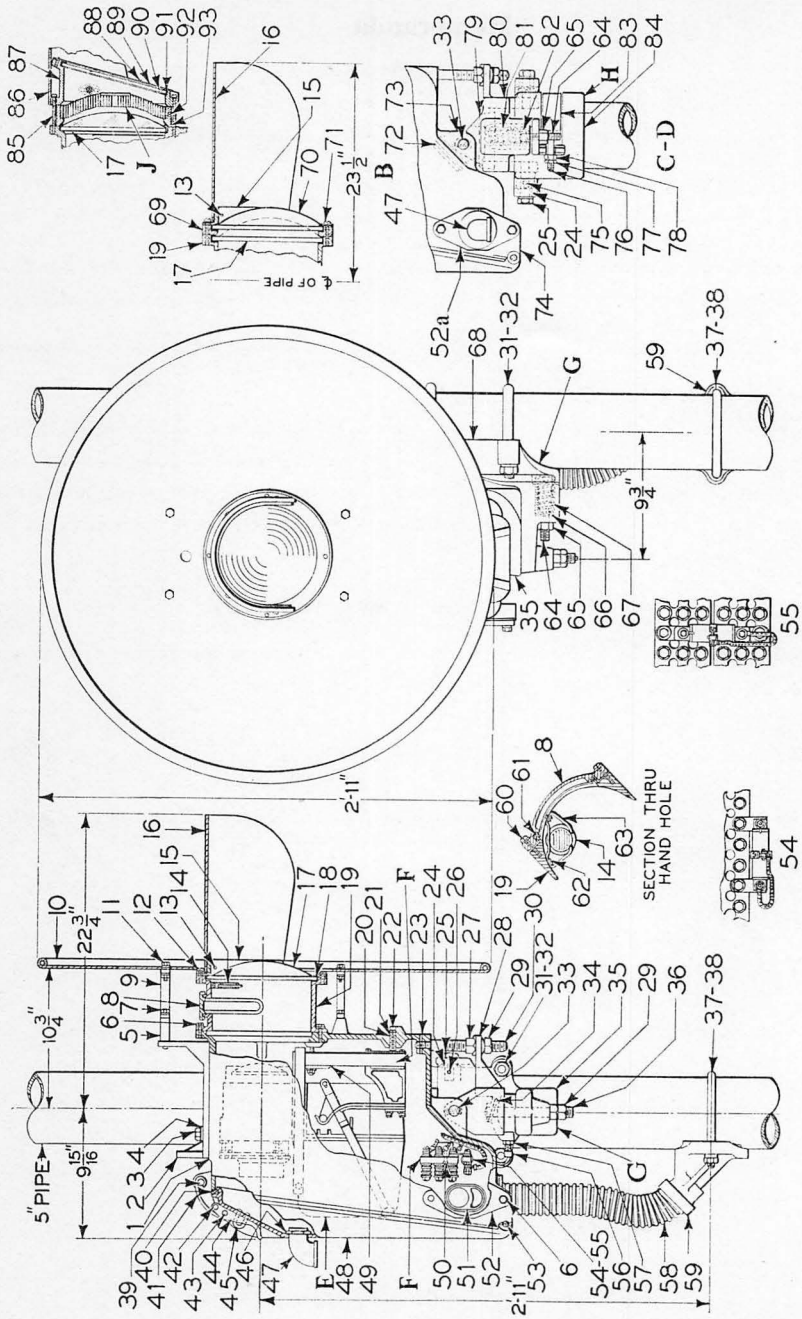

Type SC Color-Light Signal Unit With Compound Lens

Type SC Color-Light Signal Units

With Compound Lens

Note: See foreword and general information at the beginning of this part.

When ordering **NEW** signal units, remove a questionnaire found at the beginning of this part, write in information requested and attach to your order.

When ordering complete signal units for **REPLACEMENT,** give drawing numbers stamped on housing and mechanism nameplates in addition to the regular catalog reference.

Signal Units are regularly furnished to give three indications: red, yellow and green. Specify if other color combinations are required.

Compound lens signal units are regularly assembled with a 2¼″ diameter, 40-degree deflecting roundel Fig. 14 which is positioned so that the secondary beam is deflected downward and to the left, as viewed when facing the lens, at an angle of 30 degrees from the vertical for close-up indications. The roundel may be rotated to change this angle as conditions require.

When Phankill unit Fig. J is used, roundel Fig. 14 is omitted.

Lamps are not included with signal units and must be ordered separately. See Section H, Part 39 for order references on lamps.

Refer to Plate H2759 for various methods of bringing wires into signal units.

Drawing references are shown for convenience in checking shipping lists and invoices.

Fig. No.	Name	Drawing Reference
	Order by plate, figure number and name	
A	Type SC Color-Light Signal Unit Complete, for side-of-mast mounting on 5″ dia. pipe, three-indication, equipped with 8⅜″ dia., 11½″ focus, plano-convex outer lens Fig. 17. For use on tangent track	59000
B	Type SC Color-Light Signal Unit Complete, for side-of-mast mounting on 5″ dia. pipe, three-indication, equipped with 8⅜″ dia., 11½″ focus, plano-convex outer lens Fig. 17 and 8⅜″ dia. 20-degree deflecting outer roundel Fig. 70. This lens combination deflects the main beam through an angle of 20 degrees to one side of the beam axis. For use on curved track	59000

(*Continued on following page*)

GENERAL RAILWAY SIGNAL COMPANY February 1948

Type SC Color-Light Signal Units

With Compound Lens

Drawing references are shown for convenience in checking shipping lists and invoices.

Fig. No.	Name	Drawing Reference
	Order by plate, figure number and name	
B1	same as Fig. B, except equipped with 40-degree deflecting outer roundel Fig. 70b. This lens combination deflects the main beam 40 degrees to one side of the beam axis. For use on sharp curves	59000
B2	same as Fig. B, except equipped with 15-degree Spredlite outer roundel Fig. 70d. This lens combination spreads the main beam 7½ degrees to each side of the beam axis for a total of 15 degrees. For use on reverse curves	59000
B3	same as Fig. B, except equipped with 30-degree Spredlite outer roundel Fig. 70f. This lens combination spreads the main beam 15 degrees to each side of the beam axis for a total of 30 degrees. For use on reverse curves only, as this lens combination materially reduces the range of the signal	59000
C	Type SC Color-Light Signal Unit Complete, for top-of-mast mounting on 5″ dia. pipe, three indication, equipped with 8⅜″ dia., 11½″ focus, plano-convex outer lens Fig. 17. For use on tangent track	59000-1
D	Type SC Color-Light Signal Unit Complete, for top-of-mast mounting on 5″ dia. pipe, three-indication, equipped with 8⅜″ dia., 11½″ focus, plano-convex outer lens Fig. 17 and 8⅜″ dia. 20-degree deflecting outer roundel Fig. 70. This lens combination deflects the main beam through an angle of 20 degrees to one side of the beam axis. For use on curved track.	59000-1
D1	as above, except equipped with 40-degree deflecting outer roundel Fig. 70b. This lens combination deflects the main beam 40 degrees to one side of the beam axis. For use on sharp curves	59000-1
D2	same as Fig. D except equipped with 15-degree Spredlite outer roundel Fig. 70d. This lens combination spreads the main beam 7½ degrees to each side of the beam axis for a total of 15 degrees. For use on reverse curves	59000-1

(Continued on following page)

Type SC Color-Light Signal Units

With Compound Lens

Drawing references are shown for convenience in checking shipping lists and invoices.

Fig. No.	Name	Drawing Reference
	Order by plate, figure number and name	
D3	same as Fig. D, except equipped with 30-degree Spredlite outer roundel Fig. 70f. This lens combination spreads the main beam 15 degrees to each side of the beam axis for a total of 30 degrees. For use on reverse curves only, as this lens combination materially reduces the range of the signal	59000-1
E	Mechanism Complete, three-position, polar-neutral. For details and order references, see Plate H2763, Fig. A	59060-1
E1	as above, except three-position, neutral-neutral. For details and order references, see Plate H2769, Fig. A	59061-1
F	Terminal Board and Plugboard Group Complete, includes single terminal board, plugboard, mechanism locking springs and leads. For details and order references see Plate H2783	59137
F1	as above, except with double terminal board	59137-1
G	Resilient Mounting Complete, for mounting signal unit to mast of 5″ or 6″ dia. pipe. For replacing rigid bracket	58859 Gr. 2
G1	as above, except without bracket base Fig. 28, for replacing resilient bracket	58859 Gr. 5
H	Resilient Mounting Complete, for mounting signal unit on top of mast of 5″ dia. pipe	58859-1 Gr. 1
J	Phankill Unit Complete, for signal	56629-2
1	Case Complete, housing for mechanism, for side-of-mast mounted signals, includes door with gasket, hasp, strap, track for mechanism, adjusting stud with pin and all riveted parts	59138 Gr. 3
1a	as above except with side opening door. For side-of-mast mounted signals Figs. A and B, For details and order references see Plate H2757	59138-2 Gr. 1
2	Sighting Device Complete, as shown	51120-2 Gr. 1
3	Screw, ⅜″-16 x ¾″ hex. hd., for fastening sighting device and background bracket to case	0395-7
4	Lead Washer, ⅛″ th. for screw Fig. 3	19867-2

(Continued on following page)

GENERAL RAILWAY SIGNAL COMPANY February 1948

Type SC Color-Light Signal Units

With Compound Lens

Drawing references are shown for convenience in checking shipping lists and invoices.

Fig. No.	Name	Drawing Reference
	Order by plate, figure number and name	
5	Spacer, for background Fig. 10	33645-9
6	Screw, $\frac{5}{16}$"-18 x 1" hex. hd., with lock washer, for fastening adapter to case. Also for fastening Figs. 51 and 52 to case	3440-6 0623-1
7	Screw, $\frac{3}{8}$"-16 x $2\frac{3}{4}$" hex. hd., with lock washer, for fastening bracket Fig. 9 and spacer Fig. 5 to sighting device	0430-1 42175
8	Cover, for handhole	49584-9
9	Bracket, for background	40539-91
10	Background, 35" dia. as shown	49162-82
11	Bolt, $\frac{3}{8}$"-16 x $\frac{3}{4}$" hex. hd., with hex. nut and lock washer, for fastening background to bracket	46069-4 42175
12	Screw $\frac{5}{16}$"-18 x $\frac{3}{4}$" rd. hd., with lock washer, for fastening bezel ring Fig. 15 to adapter	33287-6 0623-1
13	Screw, No. 10-32 x $\frac{1}{4}$" rd. hd., for fastening hood to case	2438-9
14	Roundel, $2\frac{1}{4}$" dia. with 40-degree deflecting prisms	54264
15	Bezel Ring, as shown	43983-35
16	Hood, 12" long, as shown	49127-19
17	Outer Lens, $8\frac{3}{8}$" dia., $11\frac{1}{2}$" focus, plano-convex. Regularly used on all compound lens signal units	54249-2
17a	as above, except with gasket	54193-2
18	Gasket, for outer lens Fig. 17 and outer roundel Fig. 70	13014-232
19	Adapter, as shown	54243-6
20	Stud, $\frac{1}{2}$"-20, with hex. nut and lock washer, for fastening and adjusting housing plugboard	8885-81 1155-10 0623-1
21	Screw, $\frac{1}{2}$"-20, for locking stud Fig. 20	5100-38
22	Plug, for sealing screw Fig. 21	37517-15
23	Taper Pin, No. 2 for fastening stud Fig. 30 to case	28349
24	Rubber Bushing, for studs Fig. 25	2414-1
25	Stud, as shown for Figs. G and H	22666-11
26	Taper Pin, No. 3 x $1\frac{3}{4}$" lg. for stud Fig. 25 on Fig. G	715-47
27	Nut, $\frac{3}{4}$"-10 hex, for stud Fig. 30	646-3

(Continued on following page)

February 1948 GENERAL RAILWAY SIGNAL COMPANY

Type SC Color-Light Signal Units

With Compound Lens

Drawing references are shown for convenience in checking shipping lists and invoices.

Fig. No.	Name	Drawing Reference
	Order by plate, figure number and name	
28	Bracket Base, for supporting signal unit	53092-3
29	Nut, ¾″-10 hex. for studs Figs. 30 and 36	0272-1
30	Stud, for obtaining vertical adjustment of signal unit	980-66
31	U Bolt Complete, for mounting bracket-clamp to mast of 5″ dia. pipe. Includes nuts and washers	16209-4 Gr. 1
32	U Bolt Complete, for mounting bracket clamp to mast of 6″ dia. pipe. Includes nuts and washers	16209-6 Gr. 1
33	Pin, with cotter, for fastening signal unit to resilient mounting Figs. G and H	730-110 0663-1
34	Taper Pin No. 2, for fastening stud Fig. 36 to bracket base Fig. 28	46463
35	Bracket Support, as shown	53093-10
36	Stud, for obtaining horizontal adjustment of signal unit	980-42
37	U Bolt Complete, for mounting coupling to mast of 5″ dia. pipe, includes nuts and washers	5183 Gr. 11
38	U Bolt Complete, for mounting coupling to mast of 6″ dia. pipe, includes nuts and washers	5183-7 Gr. 1
39	Pin, ¼″ dia. x 2⅛″ lg., for strap Fig. 41	20127-11
40	Gasket, 4′-10″ long, for door	43786-2
41	Strap, for door	30804-14
42	Pin, ¼″ dia. x 2 ¾″ lg., for hasp	20127-12
43	Pin, ¼″ dia., x 1½″ lg., for hasp	1870
44	Hasp, for door	16110-1
45	Staple, for hasp	16914-1
46	Lock Nut, for door ventilator Fig. 47	0359
47	Ventilator 1″ std. pipe thread	52981 Gr. 1
48	Door Complete, top opening, includes gasket, hasp, strap and all riveted parts	59121 Gr. 4
49	Strap, for housing plugboard	51432-61
50	Screw, No. 10-32 x ⅞″ fil. hd., with lock washer, for fastening terminal board to case	12563-9 53029-3

(Continued on following page)

GENERAL RAILWAY SIGNAL COMPANY February 1948

Type SC Color-Light Signal Units

With Compound Lens

Drawing references are shown for convenience in checking shipping lists and invoices.

Fig. No.	Name	Drawing Reference
	Order by plate, figure number and name	
51	Coupling, for wire entrance. See Plate H2759 for various methods of bringing wires into signal units	59202-1
52	Cover Plate, for wire entrance	59215
52a	Coupling Plate, with 1″ tapped hole for ventilator	59202-5
53	Hinge Pin, with cotter, for door	730-108 0663-1
54	Resistance Unit Complete, approx. 1 ohm resistance, 2.5 amps. maximum. For mounting on single terminal board	55945-2 Gr. 1
54a	as above, except approx. 2 ohms resistance, 1.75 amps. maximum	55945-2 Gr. 2
54b	same as Fig. 54 except 5 ohms resistance, 1 amp. maximum	55945-2 Gr. 3
55	Resistance Unit Complete, approx. 1 ohm resistance, 2. 5 amps. maximum. For mounting on double terminal board	55945-3 Gr. 1
55a	as above, except approx. 2 ohms resistance 1.75 amps. maximum	55945-3 Gr. 2
55b	same as Fig. 55, except approx. 5 ohms resistance, 1 amp. maximum	55945-3 Gr. 3
56	Screw, ½″-13 x 1½″ sq. hd., for locking signal unit in position	40426
57	Nut, ½″-13 hex., for locking screw Fig. 56 in place	12754
58	Conduit, see Plate H2759 for various ways to bring wires into signal and specify fittings required	43355-13
59	Coupling, for mast of 5″ dia. pipe. See Plate H2759 for details and order references	45688-61 Gr. 1
59a	as above, except for mast of 6″ dia. pipe	45688-61 Gr. 2
60	Screw, ¼″-20 x 1¼″ hex. hd., with lock washer, for fastening cover plate Fig. 8 to adapter	15686-1 0510-1
61	Gasket, $\frac{7}{8}$″ dia., x 17″ long, for handhole cover	43460
62	Screw, No. 8-32 x ¼″ rd. hd., with lock washer, for fastening holder Fig. 63 to adapter	2553-7 43058-1
63	Holder, for roundel Fig. 14	54248-1
64	Stud, as shown, for Figs. G and H	980-84

(Continued on following page)

February 1948 GENERAL RAILWAY SIGNAL COMPANY

Type SC Color-Light Signal Units

With Compound Lens

Drawing references are shown for convenience in checking shipping lists and invoices.

Fig. No.	Name	Drawing Reference
	Order by plate, figure number and name	
65	Nut, 5/8″-18 hex., for stud Fig. 64	1318-4
66	Spring Seat, as shown for Figs. G and H	56176-19
67	Spring, for side-of-mast mounting Fig. G	786-268
68	Bracket Clamp	53093-8
69	Ring, for use between outer lens and outer roundel on Fig. B.	43983-46
70	Outer Roundel, 8 3/8″ dia., 20-degree deflecting. Deflects the main beam through an angle of 20 degrees to one side of the beam axis. For use on curved track	9238-38
70a	as above, except with gasket	54194
70b	same as Fig. 70 except 40-degree deflecting. Deflects the main beam through an angle of 40 degrees to one side of the beam axis. For use on sharp curves	9238-53
70c	same as Fig. 70b, except with gasket	54194
70d	same as Fig. 70 except 15-degree Spredlite. Spreads the main beam 7 1/2 degrees to each side of the beam axis for a total of 15 degrees. For use on reverse curves	9238-75
70e	same as Fig. 70d, except with gasket	54194
70f	same as Fig. 70 except 30-degree Spredlite. Spreads the main beam 15 degrees to each side of the beam axis for a total of 30 degrees. For use on reverse curves	53142-1
70g	same as Fig. 70f, except with gasket	54194
71	Screw, 5/16″-18 x 1 1/2″ rd. hd., with lock washer, for fastening rings Figs. 15 and 69 to case	33287-8 0623-1
72	Lock Nut, 2″ T & B, for elbow Fig. 73	0815
73	Elbow, 2″ for wire entrance into case	35132-30
74	Case Complete, housing for mechanism, includes door with gasket, hasp, strap, track for mechanism, adjusting stud with pin and and all riveted parts, for top-of-mast mounted signals Figs. C and D. Has 2 7/16″ dia. hole drilled in 45 degree portion of bottom, for wire entrance	59138 Gr. 4

(Continued on following page)

GENERAL RAILWAY SIGNAL COMPANY February 1948

Type SC Color-Light Signal Units

With Compound Lens

Drawing references are shown for convenience in checking shipping lists and invoices.

Fig. No.	Name	Drawing Reference
	Order by plate, figure number and name	
74a	same as Fig. 74, except with side opening door. For details and order references see Plate H2757 Fig. A1	
75	Taper Pin, No. 3 for stud Fig. 25 on Fig. H	715-27
76	Bolt, ½″-13 x 3½″ sq. hd., for clamp, Fig. 83	53137
77	Lock Nut, ½″-13 x ¼″ th. hex., for bolt Fig. 76	7244-1
78	Nut, ½″-13 x ½″ th. hex., for bolt Fig. 76	26747
79	Shield, for top-of-mast mounting Fig. H	54733-3
80	Bracket Base, for Fig. H	53092-4
81	Spring, outer, for top-of-mast resilient mounting	786-273
82	Spring, inner, for top-of-mast resilient mounting	786-274
83	Clamp Complete, for Fig. H	317-28 Gr. 2
84	Socket, for mast of 5″ dia. pipe. For Fig. H	11660-9
85	Screw, $\frac{5}{16}$″-18 x 2½″ oval fil. hd., with lock washer, for fastening Phankill unit to case	35788-5 34494-1
86	Hood, 12″ long, for use with Phankill unit	49127-52
87	Ring, for flat roundel	56956
88	Screw, No. 10-32 x ½″ rd. hd., with lock washer, for fastening ring Fig. 89 to ring Fig. 87	2438-1 34494-1
89	Ring, for flat roundel	2254-2
90	Flat Roundel, clear, 20 degree deflecting	54264-4
90a	as above, except 10 degree deflecting	54264-5
90b	same as Fig. 90, except 30 degree spredlite	54264-6
90c	same as Fig. 90, except plain roundel	4679
91	Gasket, for flat roundel	13014-57
92	Set Screw, No. 14-24 for locking Phankill unit in ring Fig. 93	390-14
93	Ring, for holding Phankill unit	43983-81

Memoranda

PLATE H2755

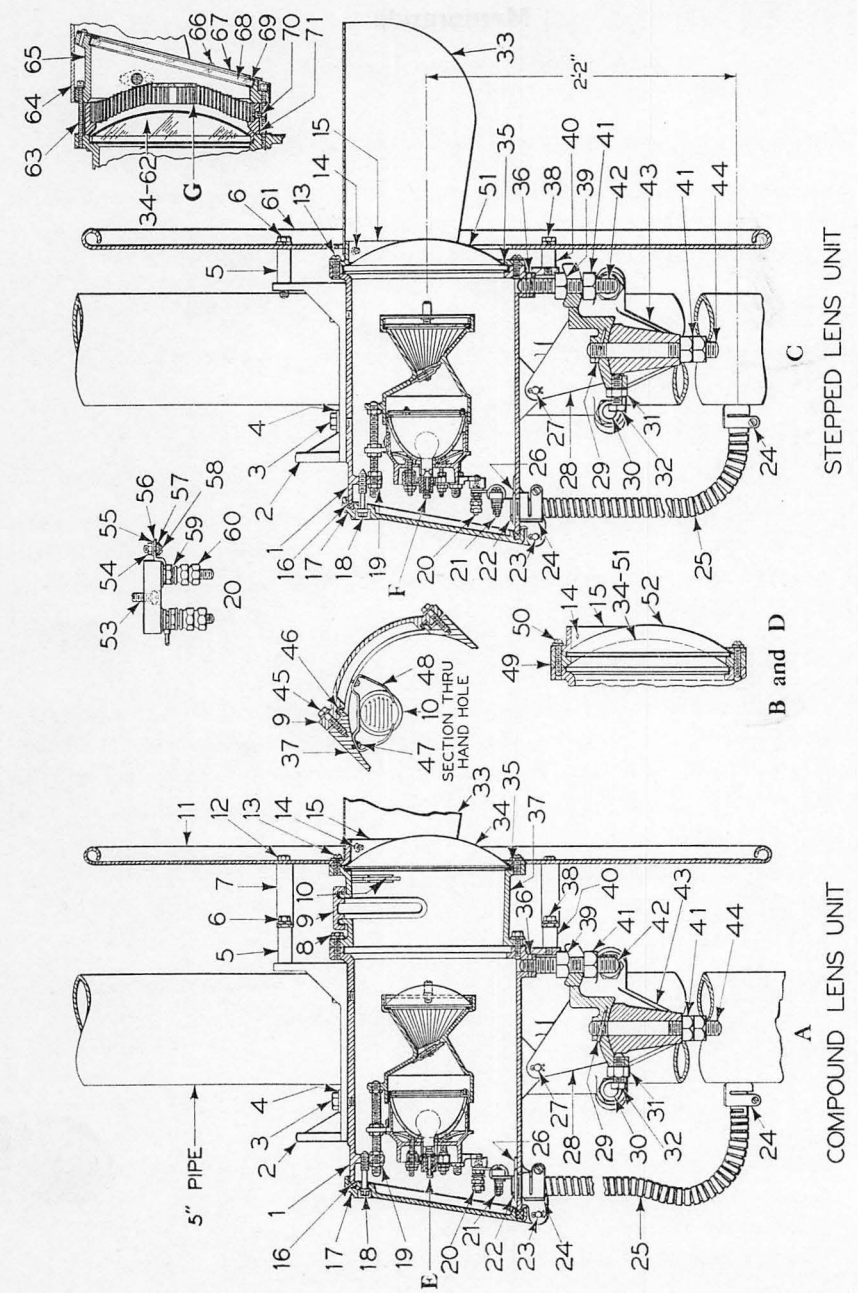

Type SC Inoperative Color-Light Signal Units

February 1948 GENERAL RAILWAY SIGNAL COMPANY

Type SC Inoperative Color-Light Signal Units

With Compound or Stepped Lens

Note: See foreword and general information at the beginning of this part.

When ordering NEW inoperative signal units, remove a questionnaire found at the beginning of this part, write in information requested and attach to your order.

When ordering complete inoperative signal units for **REPLACEMENT,** give the drawing number stamped on housing nameplate in addition to the regular catalog references.

Inoperative signal units are regularly furnished to give a red indication only. If other color indications are required, same must be specified.

Lamps are not included and must be ordered separately. See Section H, Part 39 for order references on lamps.

Compound lens signal units are regularly assembled with a 2¼″ dia. 40-degree deflecting roundel Fig. 10, which is positioned so that the secondary beam is deflected downward and to the left as viewed when facing the lens, at an angle of 30 degrees from the vertical for close-up indications. The roundel may be rotated to change this angle as conditions require.

When Phankill Unit Fig. G is used, roundel Fig. 10 is omitted.

Stepped lens signal units are regularly assembled with an 8⅜″ dia., 40-degree deflecting bulls-eye outer lens Fig. 51, having its secondary beam deflecting downward and to the left, as viewed when facing the lens, at an angle of 30 degrees from the vertical for close-up indications. This lens may be rotated to change this angle as conditions require.

Refer to Plate H2759 for various methods of bringing wires into signal units.

For details and order references on Type W Marker Lights, see Section H, Part 32.

Drawing references are shown for convenience in checking shipping lists and invoices.

Fig. No.	Name	Drawing Reference
	Order by plate, figure number and name	
A	Type SC Inoperative Color-Light Signal Unit Complete, with compound lens, for side-of-mast mounting on 5″ dia. pipe, one indication, equipped with 8⅜″ dia. 11½″ focus, plano-convex outer lens Fig. 34. For use on tangent track.....	59099

(*Continued on following page*)

PLATE H2755

GENERAL RAILWAY SIGNAL COMPANY February 1948

Type SC Inoperative Color-Light Signal Units

With Compound or Stepped Lens

Drawing references are shown for convenience in checking shipping lists and invoices.

Fig. No.	Name	Drawing Reference
	Order by plate, figure number and name	
B	Type SC Inoperative Color-Light Signal Unit Complete, with compound lens, for side-of-mast mounting on 5″ dia. pipe, one indication, equipped with 8⅜″ dia. 11½″ focus, plano-convex outer lens Fig. 34 and 8⅜″ dia. 20-degree deflecting outer roundel Fig. 52. This lens combination deflects the main beam through an angle of 20 degrees to one side of the beam axis. For use on curved track	59099
B1	as above, except equipped with 40-degree deflecting roundel Fig. 52b. This lens combination deflects the main beam through angle of 40 degrees to one side of the beam axis. For use on sharp curves	59099
B2	same as Fig. B, except equipped with 15-degree Spredlite outer roundel Fig. 52d. This lens combination spreads the main beam 7½ degrees to each side of the beam axis for a total of 15 degrees. For use on reverse curves	59099
B3	same as Fig. B, except equipped with 30-degree Spredlite outer roundel Fig. 52f. This lens combination spreads the main beam 15 degrees to each side of the beam axis for a total of 30 degrees. For use on reverse curves only, as this lens combination materially reduces the range of the signal	59099
C	Type SC Inoperative Color-Light Signal Unit Complete, with stepped lens, for side-of-mast mounting on 5″ dia. pipe, one indication, equipped with 8⅜″ dia., 5″ focus, 40-degree deflecting bulls-eye outer lens Fig. 51, for use on tangent track.	59098
D	Type SC Inoperative Color-Light Signal Unit Complete, with stepped lens, for side-of-mast mounting on 5″ dia. pipe, one indication, equipped with 8⅜″ dia. 40-degree deflecting bulls-eye outer lens Fig. 51 and 8⅜″ dia. 20-degree deflecting outer roundel Fig. 52. This lens combination deflects the main beam 20 degrees to one side of the beam axis, for use on curved track	59098

(*Continued on following page*)

February 1948 GENERAL RAILWAY SIGNAL COMPANY

Type SC Inoperative Color-Light Signal Units

With Compound or Stepped Lens

Drawing references are shown for convenience in checking shipping lists and invoices.

Fig. No.	Name	Drawing Reference
	Order by plate, figure number and name	
D1	same as Fig. D, except equipped with 40-degree deflecting outer roundel Fig. 52b. This lens combination deflects the main beam through an angle of 40 degrees to one side of the beam axis. For use on sharp curves	59098
D2	same as Fig. D, except equipped with 15-degree Spredlite outer roundel Fig. 52d. This lens combination spreads the main beam 7½ degrees to each side of the beam axis for a total of 15 degrees. For use on reverse curves	59098
D3	same as Fig. D, except equipped with 30-degree Spredlite outer roundel Fig. 52f. This lens combination spreads the main beam 15 degrees to each side of the beam axis for a total of 30 degrees. For use on reverse curves only, as this lens combination materially reduces the range of the signal	59098
E	Reflector and Lens Unit Complete, for signal unit with compound lens. For details and order references see Plate H2779, Fig. A.	59189
F	as above, except for signal unit with stepped lens. For details and order references see Plate H2779, Fig. B	59189-1
G	Phankill Unit Complete, for signal units	56629-2
1	Case only, for signal units Figs. A, B, C and D	59245
2	Sighting Device Complete, for signal units Fig. A, B, C and D.	51120-2 Gr. 1
3	Screw, ⅜″-16 x ¾″ hex. hd., for fastening sighting device to case	0395-7
4	Lead Washer, for screw Fig. 3	19867-2
5	Spacer, for upper background mounting bracket	33645-9
6	Screw, ⅜″-16 x 2¾″ hex. hd., with lock washer, for fastening bracket to sighting device	0430-1 42175
7	Bracket, for mounting background to case	40539-91
8	Screw, $\frac{5}{16}$″-18 x 1″ hex. hd., with lock washer, for fastening adapter to case	3440-6 0623-1
9	Cover, for hand hole	49584-9

(Continued on following page)

GENERAL RAILWAY SIGNAL COMPANY February 1948

Type SC Inoperative Color-Light Signal Units

With Compound or Stepped Lens

Drawing references are shown for convenience in checking shipping lists and invoices.

Fig. No.	Name	Drawing Reference
	Order by plate number and name	
10	Roundel, 2¼″ dia., with 40-degree deflecting prism	54264
11	Background, 35″ dia. for compound lens signal units	49162-82
12	Bolt, ⅜″-16 x ¾″ hex. hd., with hex. nut and lock washer, for fastening background to bracket	46069-4 42175
13	Screw, $\frac{5}{16}$″-18 x ¾″ rd. hd., with lock washer, for fastening bezel ring Fig. 15 to adapter	33287-6 0623-1
14	Screw, No. 10-32 x ¼″ rd. hd., for fastening hood to bezel ring	2438-9
15	Bezel Ring, for outer lens	43983-35
16	Gasket, for door	43786-2
17	Door Complete, includes gasket	59140 Gr. 1
18	Screw, hex. hd., for fastening door	53141-9
18a	as above, except triangular head	21687-8
19	Nut, ⅜″-24 hex., for fastening reflector and lens unit to case	52822-6
20	Terminal Block Complete, includes screw and lock washer, for fastening to reflector unit	46048-11 Gr. 2
21	Resistance Unit Complete, approximately 1 ohm resistance 2.5 amps. maximum, with brackets for mounting	55945-4 Gr. 1
21a	as above, except approximately 2 ohms resistance, 1.75 amps, maximum	55945-4 Gr. 2
21b	same as Fig. 21, except approximately 5 ohms resistance, 1 amp. maximum	55945-4 Gr. 3
22	Screw, No. 10-32 x $\frac{5}{16}$″ rd. hd., with lock washer, for fastening resistance unit to case	3044-3 53029-7
23	Pin, hinge for door, with cotter pin	491-8 035-1
24	T and B Connector, for ¾″ conduit	44515-2
25	Conduit, ¾″ flexible, 3′-0″ long	43368-23
26	Insulation Plate, for use between resistance unit and case	59244
27	Pin, with cotter pin, for mounting signal unit on bracket	730-21 0663-1
28	Bracket, for supporting signal unit on mast mounting bracket.	53092-2

(*Continued on following page*)

February 1948 GENERAL RAILWAY SIGNAL COMPANY

Type SC Inoperative Color-Light Signal Units

With Compound or Stepped Lens

Drawing references are shown for convenience in checking shipping lists and invoices.

Fig. No.	Name	Drawing Reference
	Order by plate, figure number and name	
29	Taper Pin, No. 2 x 1½″, for fastening stud Fig. 44 to bracket.	46463
30	U Bolt Complete, for mounting bracket Fig. 43 to mast of 5″ dia. pipe. Includes nuts and washers	16209-4 Gr. 1
30a	as above, except for mast of 6″ dia. pipe	16209-6 Gr. 1
31	Nut, ½″-13 x ⅞″ hex. for locking screw Fig. 32 in place	1048
32	Screw, ½″-13 x 1½″ sq. hd., cup point, for locking signal unit in horizontal position	40426
33	Hood, 12″ long, as shown	49127-19
34	Outer Lens, 8⅜″ dia., 11½″ focus, plano-convex, for use with Figs. A and B	54249-2
34a	as above, except with gasket	54193-2
35	Gasket, for outer lens	13014-232
36	Taper Pin, No. 2 x 1¼″, for fastening stud Fig. 42 to case	28349
37	Adapter, as shown, for use on Figs. A and B	54243-6
38	Screw, ⅜″-16 x 1⅞″ hex. hd., with lock washer, for fastening background bracket to case	0395-11 42175
39	Nut, ¾″-10 hex. adjusting, for stud Fig. 42	646-3
40	Spacer, for lower background mounting bracket	33645-10
41	Nut, ¾″-10 hex. for studs Figs. 42 and 44	0272-1
42	Stud, for vertical adjustment of signal unit	980-68
43	Bracket, for mounting signal unit to 5″ or 6″ pole	53093-5
44	Stud, for horizontal adjustment of signal unit	980-42
45	Screw, ¼″-20 x 1¼″ hex. hd., with lock washer, for fastening cover Fig. 9 to adapter	15686-1 0510-1
46	Gasket, $\frac{7}{16}$″ dia., for cover Fig. 9	43460
47	Screw, No. 8-32 x ¼″ rd. hd., with lock washer, for fastening holder to adapter	2553-7 43058-1
48	Holder, for holding roundel in place	54248-1
49	Ring, for use between outer lens and outer roundel	43983-46
50	Screw, $\frac{5}{16}$″-18 x 1½″ rd. hd., with lock washer, for fastening rings Figs. 15 and 49 to case or adapter	33287-8 0623-1

(Continued on following page)

GENERAL RAILWAY SIGNAL COMPANY February 1948

Type SC Inoperative Color-Light Signal Units

With Compound or Stepped Lens

Drawing references are shown for convenience in checking shipping lists and invoices.

Fig. No.	Name	Drawing Reference
	Order by plate, figure number and name	
51	Outer Lens, 8⅜″ dia., 5″ focus, 40-degree deflecting bulls-eye, which deflects part of the main beam downward, through an angle of 40 degrees to one side of the beam axis for close-up indications. For use with Figs. C and D	36733-7
51a	as above, except with gasket	54193
52	Outer Roundel, 8⅜″ dia., 20-degree deflecting. Deflects the main beam through an angle of 20 degrees to one side of the beam axis. For use on curved track	9238-38
52a	as above, except with gasket	54194
52b	same as Fig. 52, except 40-degree deflecting. Deflects the main beam through an angle of 40-degrees to one side of the beam axis. For use on sharp curves	9238-53
52c	same as Fig. 52b, except with gasket	54194
52d	same as Fig. 52, except 15-degree Spredlite. Spreads the main beam 7½ degrees to each side of the beam axis for total of 15 degrees. For use on reverse curves	9238-75
52e	same as Fig. 52d, except with gasket	54194
52f	same as Fig. 52, except 30-degree Spredlite. Spreads the main beam 15 degrees to each side of the beam axis for a total of 30 degrees. For use reverse curves	53142-1
52g	same as Fig. 52f, except with gasket	54194
53	Screw, No. 10-32 x ½″ fil. hd., with lock washer, for fastening terminal board to reflector and lens unit	12280-9 34494-1
54	Nut, No. 8-32 hex. for screw Fig. 58	3891-1
55	Washer, for screw Fig. 58	53029-21
56	Terminal	51559-75
57	Washer, for screw Fig. 58	2534-1
58	Screw, No. 8-32 x ⅜″ rd. hd., for use on terminal	2553-11
59	Washer, for terminal post	1225-2
60	Nut, No. 14-24 hex., for terminal post	42843-1

(Continued on following page)

February 1948 GENERAL RAILWAY SIGNAL COMPANY

Type SC Inoperative Color-Light Signal Units

With Compound or Stepped Lens

Drawing references are shown for convenience in checking shipping lists and invoices.

Fig. No.	Name	Drawing Reference
	Order by plate, figure number and name	
61	Background, 35″ dia., for stepped lens signal units	49162-25
62	Outer Lens, 8⅜″ dia. 5″ focus, clear, for use with Phankill unit (no hot-spot center) on stepped lens units	36733-2
62a	as above, except with gasket	
63	Screw, $\frac{5}{16}$″-18 x 2½″ oval fil. hd., with lock washer, for fastening Phankill unit to case	35788-5 34494-1
64	Hood, 12″ long, for use with Phankill unit	49127-52
65	Ring, for flat roundel	56956
66	Screw, No. 10-32 x ½″ rd. hd., with lock washer, for fastening ring Fig. 67 to ring Fig. 65	2438-1 34494-1
67	Ring, for flat roundel	2254-2
68	Flat Roundel, clear, 20 degree deflecting	54264-4
68a	as above, except 10 degree deflecting	54264-5
68b	same as Fig. 68, except 30 degree spredlite	54264-6
68c	same as Fig. 68, except plain roundel	4679
69	Gasket, for flat roundel	13014-57
70	Set Screw, No. 14-24 for locking Phankill unit in ring Fig. 71	390-14
71	Ring, for holding Phankill unit	43983-81

PLATE H2757

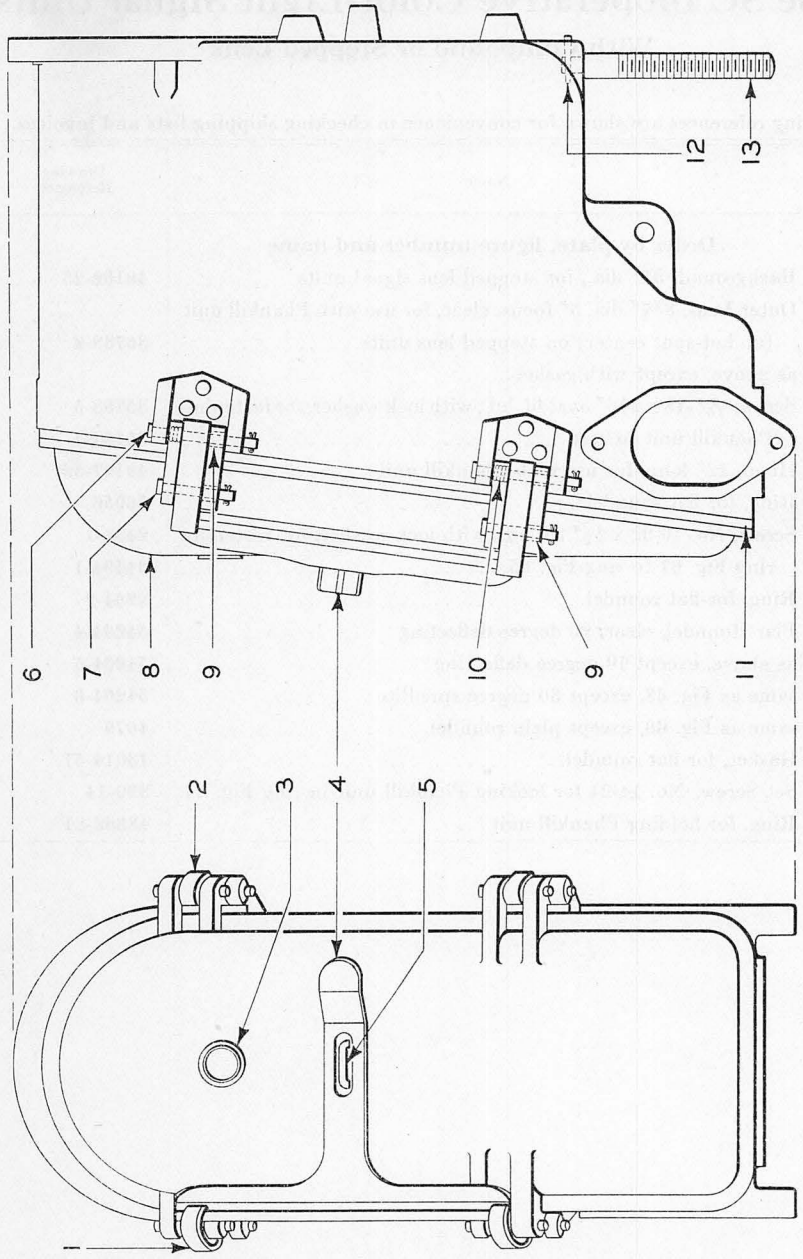

A
Case With Side Opening Door

February 1948 GENERAL RAILWAY SIGNAL COMPANY

Case With Side Opening Door

Note: Cases with side opening doors as listed below may be used on ground, bracket and bridge signal units.

Doors may be reversed from right to left hand or vice versa in the field without the use of any special tools.

Drawing references are shown for convenience in checking shipping lists and invoices.

Fig. No.	Name	Drawing Reference
	Order by plate, figure number and name	
A	Case Complete, housing for mechanism, includes door with gasket, hasp, straps, pins, track for mechanism, vertical adjusting stud with pin and all riveted parts. For side-of-mast mounting. Specify if right or left-hand door is required	59138-2 Gr. 1
A1	as above, except for top-of-mast mounted signal units. Specify if right or left-hand door is required.....	
1	Strap, for clamping door on hasp side.....	30804-24
2	Strap, for clamping door on hinge side.....	30804-25
3	Pipe Plug, for door.....	56164-6
4	Hasp, for door.....	16110-18
5	Staple, for door.....	16914-1
6	Pin, $\frac{5}{16}$" dia. x $2\frac{1}{16}$" lg., for door.....	730-115
7	Pin, $\frac{5}{16}$" dia. x $3\frac{1}{8}$" lg., for door.....	730-114
8	Door Complete, includes staple, gasket and pipe plug.....	59121-1 Gr. 1
9	Bushing, for pins Figs. 6 and 7.....	39533-22
10	Spring, for pin Fig. 6.....	586-163
11	Gasket, 4'-10" lg., for door.....	43460-2
12	Taper Pin No. 2 x $1\frac{1}{4}$" for fastening stud Fig. 13 to case	28349
13	Stud, for obtaining vertical adjustment of signal.....	980-66

PLATE H2759

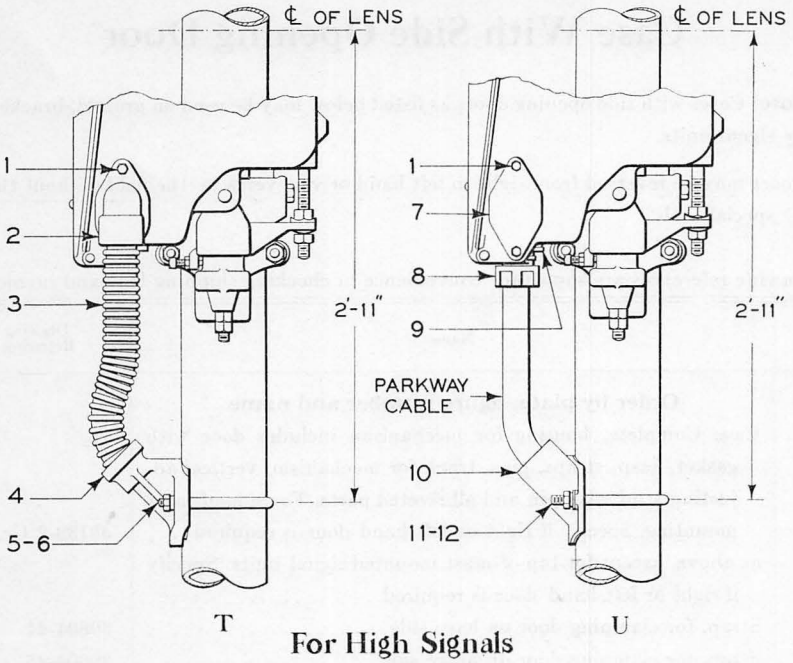

For High Signals

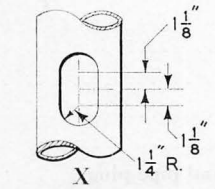

MAST DRILLING FOR COUPLING FIG. 4

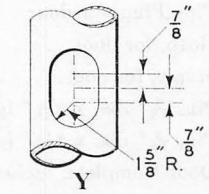

MAST DRILLING FOR COUPLING FIG. 10

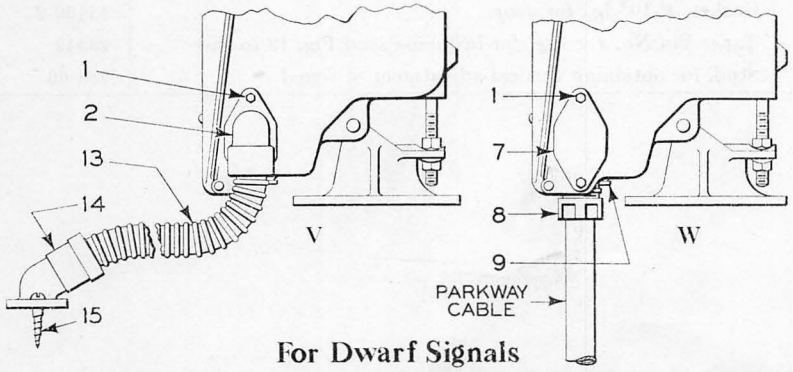

For Dwarf Signals

Conduit Entrances for High and Dwarf Signals

February 1948 GENERAL RAILWAY SIGNAL COMPANY

Conduit Entrances for High and Dwarf Signals

Note: Screws Fig. 1 and plate Fig. 7 are included on signal units complete and do not have to be ordered separately.

Drawing references are shown for convenience in checking shipping lists and invoices.

Fig. No.	Name	Drawing Reference
	Order by plate, figure number and name	
T	Method of bringing 2″ flexible conduit into side of high signal unit. The following parts are required: 1-2, 1-3, 1-4, and 1-5 (for mast of 5″ dia. pipe), or 1-6 (for mast of 6″ dia. pipe). Pipe must have oblong hole as shown in Fig. X.....	
U	Method of bringing parkway cable into bottom of high signal unit. The following parts are required: 1-8, 1-9, 1-10, 1-11, (for mast of 5″ dia. pipe) or 1-12 (for mast of 6″ dia. pipe). The pipe must have an oblong hole as shown in Fig. Y....	
V	Method of bringing 2″ flexible conduit into side of dwarf signal unit from trunking. The following parts are required, 1-2, 1-13, 1-14, and 2-15.....	
W	Method of bringing parkway cable into bottom of dwarf signal unit from foundation. The following parts are required: 1-8 and 1-9.....	
1	Screw, $\frac{5}{16}$″-18 x 1″ hex. hd., with lock washer, for fastening Figs. 2, 7 and 9 to case.....	3440-6 0623-1
2	Coupling, as shown, for 2″ flexible conduit, for Figs. T and V	
3	Conduit, 2″ flexible, 18″ long.....	43355-13
4	Coupling Complete, as shown, for 2″ flexible conduit. For mast of 5″ dia. pipe.....	45688-61 Gr. 1
4a	as above, except for mast of 6″ dia. pipe.....	45688-61 Gr. 2
5	U-Bolt Complete, with nuts and washers, for mounting coupling Fig. 4 to mast of 5″ dia. pipe.....	5183 Gr. 11
6	U-Bolt Complete, with nuts and washers, for mast of 6″ dia. pipe.....	5183-7 Gr. 1
7	Cover Plate, for wire entrance.....	59215
8	Coupling, as shown with T & B lock nut, for parkway cable. Specify outside diameter of cable.....	44515
9	Coupling Plate, with tapped hole for coupling Fig. 8, for Figs. U and W. Specify outside diameter of cable.....	59202

(Continued on following page)

GENERAL RAILWAY SIGNAL COMPANY February 1948

Conduit Entrances for High and Dwarf Signals

Drawing references are shown for convenience in checking shipping lists and invoices.

Fig. No.	Name	Drawing Reference
	Order by plate, figure number and name	
10	Coupling Complete, as shown, for parkway cable, for mast of 5″ dia. pipe. Specify outside diameter of cable	45688-49
11	U-Bolt Complete, with nuts and washers, for mounting coupling Fig. 10 to 5″ mast	5183 Gr. 7
12	U-Bolt Complete, with nuts and washers, for 6″ mast	
13	Conduit, 2″ flexible, length as required	43355
14	Coupling, for 2″ flexible conduit, for bringing wires into trunking	59202-3
15	Wood Screw, No. 14 x 1¼″ rd. hd., for fastening coupling Fig. 14 to trunking	35116

Memoranda

GENERAL RAILWAY SIGNAL COMPANY

February 1948

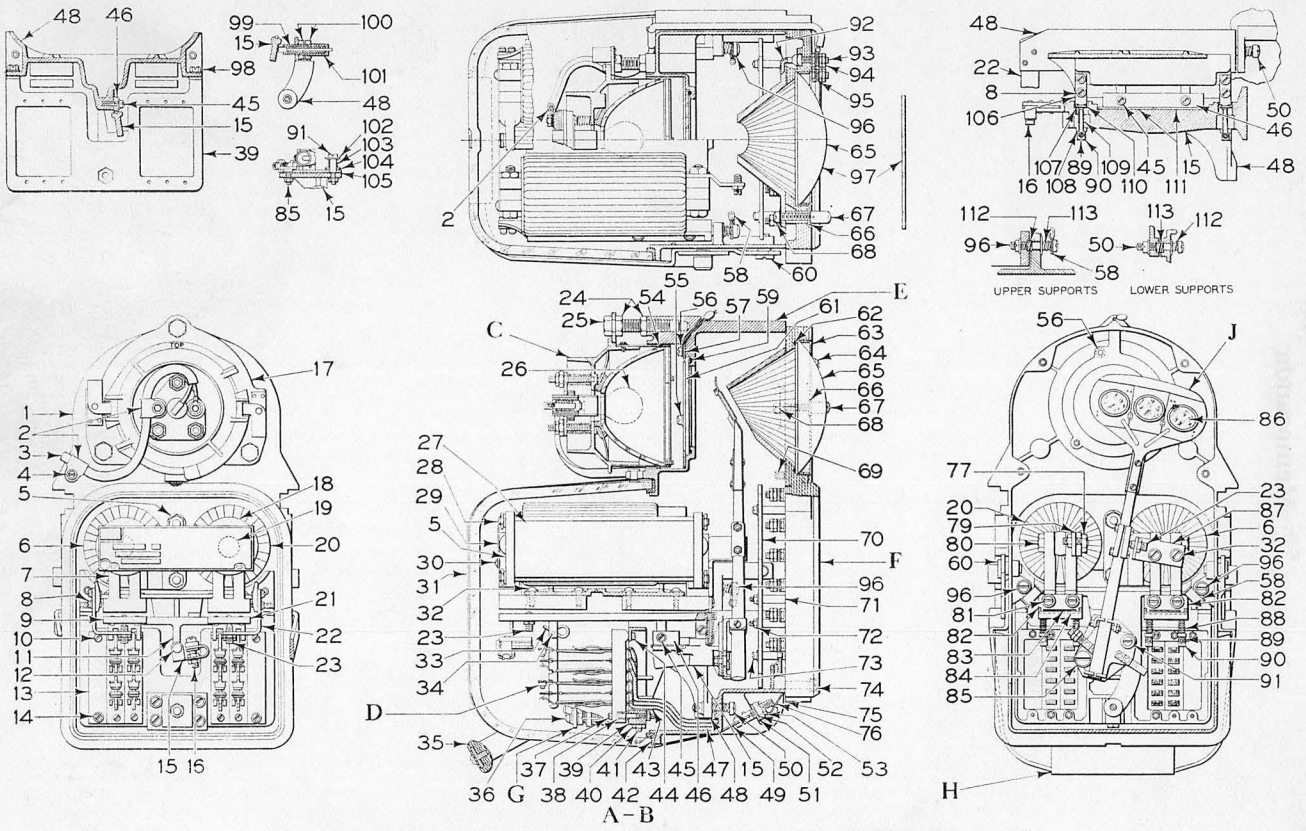

Type SC Signal Mechanism, Three-Position Polar-Neutral
For Compound or Stepped Lens Signal Units

February 1948 GENERAL RAILWAY SIGNAL COMPANY

Type SC Signal Mechanisms

Three-Position, Polar-Neutral
For Compound or Stepped Lens Signal Units

The mechanisms listed here may be used in high, dwarf, bridge or bracket signals.

When ordering mechanisms for **REPLACEMENT**, give the drawing number stamped on the mechanism nameplate in addition to the regular catalog reference.

Lamps are not included with mechanisms complete and must be ordered separately. Refer to Section H, Part 39 for order references on lamps.

Mechanisms are regularly furnished to give three indications: red, yellow and green. Specify if other color combinations are required.

Drawing references are shown for convenience in checking shipping lists and invoices.

Fig. No.	Name	Drawing Reference
	Order by plate, figure number and name	
A	Type SC Three-Position Polar-Neutral Signal Mechanism Complete, as shown, for use with compound lens signal units. 8-volt operation. Gives green, yellow and red indications...	59060-1
A1	as above, except for 10-volt operation.....	59060-1
B	Type SC Three-Position Polar-Neutral Signal Mechanism Complete, for use with stepped lens signal units. 8-volt operation. Gives green, yellow and red indications.....	59070-1
B1	as above, except for 10-volt operation.....	59070-1
C	Reflector Holder Complete, for details and order references, see Plate H2779.....	59129 Gr. 1
D	Contact Group Complete, for details and order references, see Plate H2779.....	
E	Mechanism Frame, for three-position polar-neutral compound lens signal. Does not include contact group, plugboard, rectifier, coils, slugs, color discs and lamp. These optional parts are determined by information received on questionnaire.....	59100-1
E1	as above, for three-position polar-neutral stepped lens signal	59110-1
F	Plugboard Group Complete, for details and order references see Plate H2783, Fig. C.....	59139-1

(Continued on following page)

GENERAL RAILWAY SIGNAL COMPANY February 1948

Type SC Signal Mechanisms

Three-Position, Polar-Neutral
For Compound or Stepped Lens Signal Units

Drawing references are shown for convenience in checking shipping lists and invoices.

Fig. No.	Name	Drawing Reference
	Order by plate, figure number and name	
G	Rectifier Complete, as shown, includes screws and washers for fastening leads	59135 Gr. 1
H	Bail Complete, includes grip with screws and rollers riveted in place	59133 Gr. 1
J	Spectacle Complete, for details and order references, see Plate H2779	59127 Gr. 2
1	Case, only, for mechanism	59206
2	Clip, for lead Fig. 3	53114-1
3	Lead Complete, as shown, for lamp receptacle	5075-28 Gr. 1
4	Screw, No. 6-32 x 1/4" fil. hd., with lock washer, for fastening clip Fig. 2 to mechanism frame	55159-3 53029-26
5	Yoke, for fastening permanent magnet to pole shoe	59222
6	Coil, for DG armature, specify resistance	59252
7	Pole Shoe, as shown, left front, for DG armature	59233-2
7a	as above, except right front, for HG armature	59233-1
7b	same as Fig. 7, except left rear, for DG armature	59233-4
7c	same as Fig. 7, except right rear for HG armature	59233-3
8	Screw, No. 8-32 x 5/16" fil. hd., with lock washer, for fastening armature stop bracket Fig. 22 to bracket Fig. 48. Also for fastening spectacle beam support Fig. 106 to bracket Fig. 48	28989-21 53029-21
9	Armature Complete (DG), includes hinge, ball for link and residuals	59128-3 Gr. 1
9a	as above, except with locking bar	59128-3 Gr. 2
10	Screw, No. 6-40 x 7/16" fil. hd., with hex. nut and lock washer, for fastening top of cover plate to contact frame	55560-15 3614-3 53029-26
11	Link, connection between armatures and spectacle beam	59257
12	Pin, with split washer, for fastening link to spectacle beam	59256 590-79

(*Continued on following page*)

February 1948 GENERAL RAILWAY SIGNAL COMPANY

Type SC Signal Mechanisms

Three-Position, Polar-Neutral
For Compound or Stepped Lens Signal Units

Drawing references are shown for convenience in checking shipping lists and invoices.

Fig. No.	Name	Drawing Reference
	Order by plate, figure number and name	
13	Cover Plate, for covering contact space when contacts are not used	55880-4
14	Screw, No. 6-40 x 7/8" fil. hd., with lock washer, for fastening bottom of cover plate to contact frame	55560-17 53029-26
15	Spectacle Beam Complete, includes lever riveted in place	59122-1 Gr. 1
16	Screw, No. 8-32 x 7/8" fil. hd., with hex nuts, lock washers for adjusting spectacle beam lever	28989-18 3891-1 53029-21 1601-41
17	Plate Complete, includes mounting springs, for reflector holder	59131 Gr. 1
18	Washer, 2 9/16" dia. x 1/16" tk. for coils	493-39
18a	as above, except 1/32" tk	493-210
19	Core, for DG and HG coils	29514-109
20	Coil, for HG armature. Specify resistance	59251
21	Armature Complete, (HG), includes hinge, ball for link and residuals	59128-2 Gr. 1
22	Bracket, for armature back stop	34418-33
23	Screw, No. 14-40, headless, with hex. nut, used as adjustable stop for armatures when open, and as adjustable stop for armatures when closed	5100-10 53084-1
24	Nut, 3/8"-24 hex. for screw Fig. 25	52822-6
25	Screw, 3/8"-24 x 2" hex. hd., for adjusting reflector holder plate.	2472-35
26	Incandescent Lamp, 2 pin, candelabra, single contact bayonet base. See Section H Part 39 for ordering references	34866
27	Permanent Magnet, for mechanism	59223
28	Stud, with hex. nut and lock washer, for fastening permanent magnet to yoke	879-57 1472-8 0510-1
29	Name Plate, for mechanism, specify circuit number	401

(Continued on following page)

GENERAL RAILWAY SIGNAL COMPANY February 1948

Type SC Signal Mechanisms

Three-Position, Polar-Neutral
For Compound or Stepped Lens Signal Units

Drawing references are shown for convenience in checking shipping lists and invoices.

Fig. No.	Name	Drawing Reference
	Order by plate, figure number and name	
30	Screw, No. 6-32 x $\frac{5}{16}$″ rd. hd., with lock washer, for mounting name plate	2613-10 53029-26
31	Glass Case, as shown, for mechanism	37380-27
32	Screw, No. 10-32 x ½″ rd. hd., with washer, for fastening pole shoes Fig. 7 to bracket Fig. 48, also, used to fasten spectacle stop bracket Fig. 87 to pole shoe Fig. 7b	2438-1 53029-3
33	Spring, for drive pins	59235
34	Drive Pin, for one or two contact groups	446-6
34a	as above, except for three contact groups	446-5
35	Grip, with screws, for bail	59240 56190-1
36	Screw, No. 10-32 x $\frac{5}{16}$″ rd. hd., with lock washer, for rectifier.	2438-10 53029-3
37	Screw, No. 6-40 x 1 ½″ fil. hd., with hex. nut and lock washer, for fastening bottom of contact block to contact frame	55560-13 3614-3 53029-26
38	Spring, for screw Fig. 37	786-151
39	Contact Frame, for contact groups	59203
40	Nut, No. 10-32 hex. for screw Fig. 41	40796
41	Screw, No. 10-32, cup point, slotted, for locking rectifier in place	12305-5
42	Gasket, for glass case	13014-231
43	Shield, used between contact block and contact frame	50737-18
44	Screw, No. 6-40x $\frac{9}{16}$″ fil. hd., with lock washer, for fastening top of contact block to contact frame	55560-10 53029-26
45	Screw, No. 8-32 x ½″ fil. hd., with lock washer, for fastening spectacle beam bearing to magnet supporting bracket	28989-23 53029-21
46	Bearing, for spectacle beam	56603-1
47	Lead Complete, for contact groups	5075-29 Gr. 1
48	Bracket	59210

(*Continued on following page*)

February 1948 GENERAL RAILWAY SIGNAL COMPANY

Type SC Signal Mechanisms

Three-Position, Polar-Neutral
For Compound or Stepped Lens Signal Units

Drawing references are shown for convenience in checking shipping lists and invoices.

Fig. No.	Name	Drawing Reference
	Order by plate, figure number and name	
49	Strap Complete, for holding glass case in place, includes fittings for fastening to mechanism frame	54934-1 Gr. 1
50	Screw, ¼″-20 x 1½″ fil. hd., with washer and spanner nut, for fastening magnet supporting bracket to mechanism frame at bottom	45572-40 42840-14 53029-22 1225-178
51	Washer, for strap Fig. 49	43083-5
52	Lock Washer, for strap Fig. 49	53029-25
53	Nut, $\frac{5}{16}$″-24, hex., for fastening strap Fig. 49 to mechanism frame	52896-2
54	Gasket, tubular rubber, for use between reflector glass and holder	
55	Screw, No. 10-32 x ⅜″ fil. hd., with lock washer, for fastening ring to frame	12563-22 53029-3
56	Screw, No. 10-32 x ⅜″ fil. hd., drilled for seal, with washer, for fastening ring to frame	12563-50 53029-3
57	Ring, for retaining cover glass	2254-3
58	Clip, for fastening leads	53114-4
59	Gasket, tubular rubber, for use between frame and cover glass	52983-4
60	Screw, $\frac{5}{16}$″-18 x ⅞″ rd. hd., for bail Fig. H	3628-7
61	Cover Glass, for sealing reflector unit	924-22
62	Gasket, tubular rubber, for use between lens and plugboard.	52983-5
63	Ring, for holding lens in plugboard	59229
64	Screw, ¼″-20 x 1¼″ fil. hd., with lock washer, for fastening and sealing plugboard to mechanism frame	45048-18 53029-42
65	Lens, 4 $\frac{15}{32}$″ dia., clear, for compound lens signals only	54249-4
66	Clip, for holding ring Fig. 63	18547-61
67	Screw, ¼″-20, x 1$\frac{1}{16}$″ with lock washer, for fastening ring in place	34456-3 53029-42

(Continued on following page)

GENERAL RAILWAY SIGNAL COMPANY February 1948

Type SC Signal Mechanisms

Three-Position, Polar-Neutral
For Compound or Stepped Lens Signal Units

Drawing references are shown for convenience in checking shipping lists and invoices.

Fig. No.	Name	Drawing Reference
	Order by plate, figure number and name	
68	Screw, 1/4″-20 x 5/8″ fil. hd., with lock washer, for fastening cone to plugboard	45048-6 53029-22
69	Screw, 1/4″-20 x 1″ fil. hd., with lock washer, for fastening plug-board to mechanism frame	45572-14 0510-1
70	Plate, insulating, for plugboard	59212
71	Spacer, for screw Fig. 73 and stud on plugboard	50062-8
72	Nut, No. 8-32 hex., with lock washer, for stud on plugboard	28948-1 53029-21
73	Screw, No. 8-32 x 1 5/8″ fil. hd., with lock washer, for fastening insulating plate to plugboard	28989-11 53029-21
74	Screw, 1/4″-20 x 1 1/4″ fil. hd., with lock washer, for fastening plugboard to mechanism frame	45572-15 0510-1
75	Clip, shipping	15795-40
76	Spring, retaining, for use with clip Fig. 75	51107-14
77	Nut, 5/16″-18 hex., for screw Fig. 80	29954-2
79	Bracket, spectacle stop	34418-59
80	Screw, 5/16″-18 x 1 1/2″ hex. hd., for fastening coil to pole shoe	2878-2
81	Screw, No. 8-32, collar hd., for fastening armature pivot support Fig. 82 to armature	53829-7
82	Support, for armature pivot	59230
83	Bearing Plate, for armature bearing	56603-2
84	Needle, for use as armature bearing	56602-3
85	Screw No. 8-32 x 7/8″ lg., with hex. nut and washers, for fastening spectacle to spectacle beam Fig. 15	3628-6 28948-1 53029-21 1225-148
86	Color Disc Complete, red, A.A.R. Standard, assembled in retaining cup	53073 Gr. 2
86a	as above, except yellow, with one side depolished, A.A.R. Standard	53073 Gr. 12

(Continued on following page)

February 1948 GENERAL RAILWAY SIGNAL COMPANY

Type SC Signal Mechanisms

Three-Position, Polar-Neutral
For Compound or Stepped Lens Signal Units

Drawing references are shown for convenience in checking shipping lists and invoices.

Fig. No.	Name	Drawing Reference
	Order by plate, figure number and name	
86b	same as Fig. 86, except green, pre-cracked, A.A.R. Standard	53073 Gr. 3
86c	same as Fig. 86, except purple, pre-cracked, A.A.R. Standard.	53073 Gr. 7
87	Bracket, spectacle stop, for red position	34418-35
88	Spring, as shown, for armature pivot support	586-127
89	Screw, No. 2-56 x 1/4" fil. hd. with hex. nut and washer, for fastening stop Fig. 90 to armature pivot support Fig. 82	55222-16 15649-2 53029-34
90	Stop, for armature pivot support Fig. 82	56986
91	Screw, No. 8-32 x 7/8" lg., with hex. nut and washer, for holding spectacle to beam Fig. 15	3628-5 28948-1 53029-21
92	Lead Complete, as shown	5075-32 Gr. 1
93	Screw, No. 10-32 x 7/8" sq. hd., for use as terminal post	351-10
94	Nut, No. 10-32 hex. for screw Fig. 93	40796
95	Washer, for screw Fig. 93	5046-5
96	Screw, 1/4"-20 x 1 1/4" fil. hd., with washer, and spanner nut for fastening magnet supporting bracket to mechanism frame at top, also for fastening clip Fig. 58	45572-34 42840-14 53029-22 1225-2
97	Cover Glass, flat, for use in stepped lens signals only	924-17
98	Screw, No. 10-32 x 5/8" slotted hex. hd. with lock washer, for fastening contact frame to bracket Fig. 48	13006-39 53029-3
99	Spring, for snubber	586-147
100	Nut, 3/8"-32 x 5/32" tk., hex., for snubber	43238-3
101	Snubber Complete, includes spring and plunger, for snubbing spectacle beam Fig. 16	59143 Gr. 1
102	Washer, stop for spring Fig. 103	31036-1
103	Spring, for screw Fig. 91	586-130
104	Washer, for screw Fig. 91	493-16
105	Plate, for use between spectacle and spectacle beam Fig. 15	59248

(Continued on following page)

GENERAL RAILWAY SIGNAL COMPANY February 1948

Type SC Signal Mechanisms

Three-Position, Polar-Neutral
For Compound or Stepped Lens Signal Units

Drawing references are shown for convenience in checking shipping lists and invoices.

Fig. No.	Name	Drawing Reference
	Order by plate, figure number and name	
106	Support, for spectacle beam Fig. 15	59230-1
107	Washers, for use on spectacle beam support Fig. 106	590-85 22539-14
108	Cup Washer, stop for springs Figs. 88 and 109	22539-11
109	Spring, for spectacle beam pivot	586-131
110	Washer, for spectacle beam pivot	590-73
111	Needle, for spectacle beam	56602-5
112	Spring, as shown, for upper and lower supports	786-270
113	Spring, as shown, for upper and lower supports	786-271

Memoranda

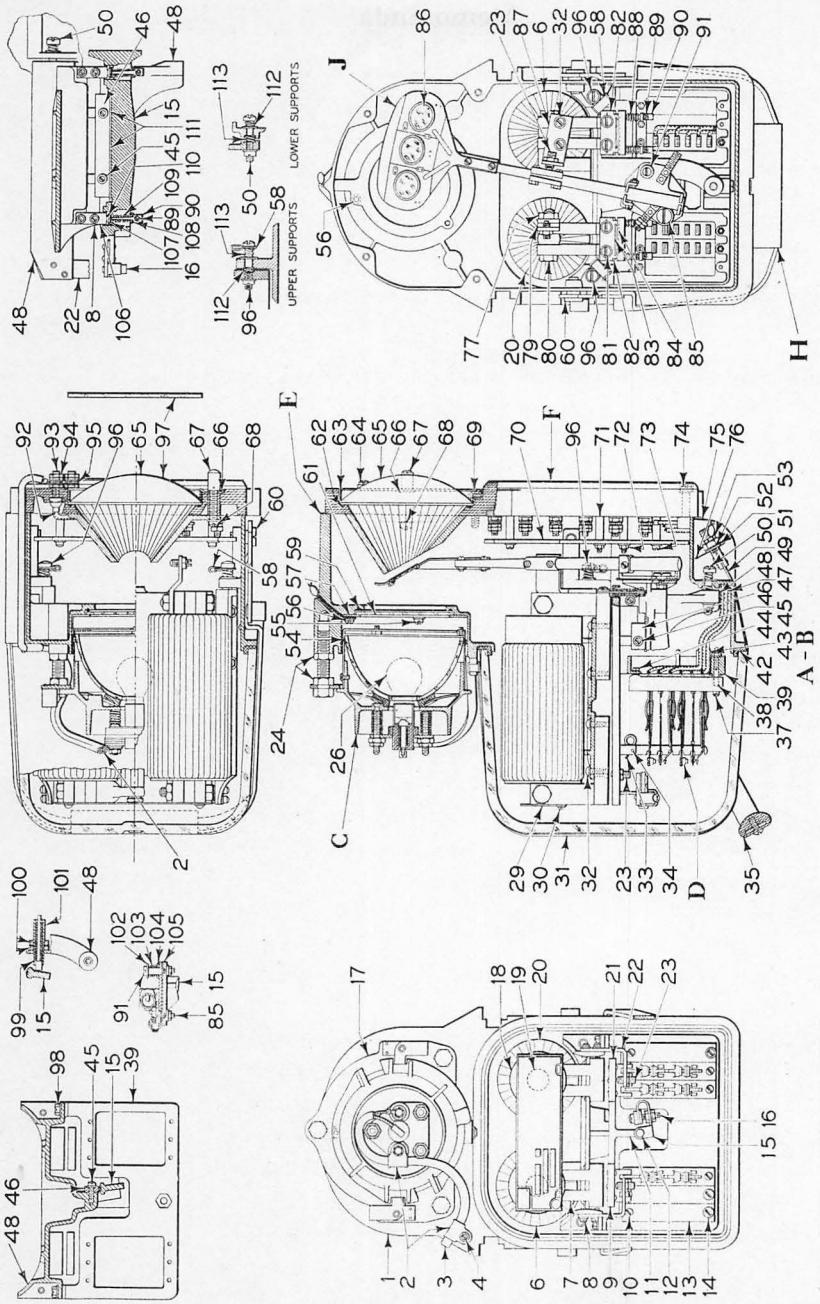

Type SC Signal Mechanism, Three-Position Neutral-Neutral
For Compound or Stepped Lens Signal Units

February 1948 GENERAL RAILWAY SIGNAL COMPANY

Type SC Signal Mechanisms

Three-Position, Neutral-Neutral
For Compound or Stepped Lens Signal Units

The mechanisms listed here may be used in high, dwarf, bridge or bracket signals.

When ordering mechanisms for **REPLACEMENT**, give the drawing number stamped on the mechanism nameplate in addition to the regular catalog reference.

Lamps are not included with mechanisms complete and must be ordered separately. Refer to Section H, Part 39 for order references on lamps.

Mechanisms are regularly furnished to give three indications: red, yellow and green. Specify if other color combinations are required.

Drawing references are shown for convenience in checking shipping lists and invoices.

Fig. No.	Name	Drawing Reference
	Order by plate, figure number and name	
A	Type SC Three-Position Neutral-Neutral Signal Mechanism Complete, as shown, for use with compound lens signal units. 8-volt operation. Gives green, yellow and red indications	59061-1
A1	as above, except for 10-volt operation	59061-1
B	Type SC Three-Position Neutral-Neutral Signal Mechanism Complete, for use with stepped lens signal units. 8-volt operation. Gives green, yellow and red indications	59071-1
B1	as above, except for 10-volt operation	59071-1
C	Reflector Holder Complete, for details and order references, see Plate H2779	59129 Gr. 1
D	Contact Group Complete, for details and order references, see Plate H2779	
E	Mechanism Frame, for three-position neutral-neutral compound lens signal. Does not include contact group, plugboard, coils, slugs, color discs and lamp. These optional parts are determined by information received on questionnaire	59101-1
E1	as above, except for three-position neutral-neutral stepped lens signal	59111-1
F	Plugboard Group Complete, for details and order references see Plate H2783, Fig. C	59139-1

(Continued on following page)

GENERAL RAILWAY SIGNAL COMPANY February 1948

Type SC Signal Mechanisms

Three-Position, Neutral-Neutral
For Compound or Stepped Lens Signal Units

Drawing references are shown for convenience in checking shipping lists and invoices.

Fig. No.	Name	Drawing Reference
	Order by plate, figure number and name	
H	Bail Complete, includes grip with screws and rollers riveted in place	59133 Gr. 1
J	Spectacle Complete, for details and order references see Plate H2779	59127 Gr. 2
1	Case, only, for mechanism	59206
2	Clip, for lead Fig. 3	53114-1
3	Lead Complete, as shown for lamp receptacle	5075-28 Gr. 1
4	Screw, No. 6-32 x ¼″ fil. hd., with lock washer, for fastening clip Fig. 2 to mechanism frame	55159-3 53029-26
6	Coil, for DG armature. Specify resistance	59252
7	Pole Shoe, as shown, left front, for DG armature	59233-2
7a	as above, except right front, for HG armature	59233-1
7b	same as Fig. 7, except left rear, for DG armature	59233-4
7c	same as Fig. 7, except right rear for HG armature	59233-3
8	Screw, No. 8-32 x 5/16″ fil. hd., with lock washer, for fastening armature stop bracket Fig. 22 to bracket Fig. 48. Also for fastening spectacle beam support Fig. 106 to bracket Fig. 48	28989-21 53029-21
9	Armature Complete (DG), includes hinge, ball for link and residuals	59128-3 Gr. 1
9a	as above, except with locking bar	59128-3 Gr. 2
10	Screw, No. 6-40 x 7/16″ fil. hd., with hex. nut and lock washer, for fastening top of cover plate to contact frame	55560-15 3614-3 53029-26
11	Link, connection between armatures and spectacle beam	59257
12	Pin, with split washer, for fastening link to spectacle beam	59256 590-79
13	Cover Plate, for covering contact space when contacts are not used	55880-4

(Continued on following page)

February 1948 GENERAL RAILWAY SIGNAL COMPANY

Type SC Signal Mechanisms

Three-Position, Neutral-Neutral
For Compound or Stepped Lens Signal Units

Drawing references are shown for convenience in checking shipping lists and invoices.

Fig. No.	Name	Drawing Reference
	Order by plate, figure number and name	
14	Screw, No. 6-40 x 7/8" fil. hd., with lock washer, for fastening bottom of cover plate to contact frame	55560-17 53029-26
15	Spectacle Beam Complete, includes lever riveted in place	59122-1 Gr. 1
16	Screw, No. 8-32 x 7/8" fil. hd. with hex. nuts, lock washers for adjusting spectacle beam lever	28989-18 3891-1 53029-21 1601-41
17	Plate Complete, includes mounting springs, for reflector holder	59131 Gr. 1
18	Washer, 2 9/16" dia. x 1/16" tk., for coils	493-39
18a	as above, except 1/32" tk.	493-210
19	Core, for DG and HG coils	29514-109
20	Coil, for HG armature. Specify resistance	59251
21	Armature Complete, (HG), includes hinge, ball for link and residuals	59128-2 Gr. 1
22	Bracket, for armature back stop	34418-33
23	Screw, No. 14-40, headless, with hex. nut, used as adjustable stop for armatures when open, and as adjustable stop for armatures when closed	5100-10 53084-1
24	Nut, 3/8"-24 hex. for screw	52822-6
26	Incandescent Lamp, 2 pin, candelabra, single contact bayonet base. See Section H, Part 39 for ordering references	34866
29	Name Plate, for mechanism, specify circuit number	401
30	Screw, No. 6-32 x 5/16" rd. hd. with lock washer, for mounting name plate	2613-10 53029-26
31	Glass Case, as shown, for mechanism	37380-27
32	Screw, No. 10-32 x 1/2" rd. hd., with washer, for fastening pole shoes Fig. 7 to bracket Fig. 48. Also used to fasten spectacle stop bracket Fig. 87 to pole shoe Fig. 7b	2438-1 53029-3
33	Spring, for drive pins	59235
34	Drive Pin, for one or two contact groups	446-6

(Continued on following page)

GENERAL RAILWAY SIGNAL COMPANY February 1948

Type SC Signal Mechanisms

Three-Position, Neutral-Neutral
For Compound or Stepped Lens Signal Units

Drawing references are shown for convenience in checking shipping lists and invoices.

Fig. No.	Name	Drawing Reference
	Order by plate, figure number and name	
34a	same as Fig. 34, except for three contact groups	446-5
35	Grip, with screws, for bail	59240 56190-1
37	Screw, No. 6-40 x 1½″ fil. hd. with hex. nut and lock washer, for fastening bottom of contact block to contact frame	55560-13 3614-3 53029-26
38	Spring, for screw Fig. 37	786-151
39	Contact Frame, for contact groups	59203
42	Gasket, for glass case	13014-231
43	Shield, used between contact block and contact frame	50737-18
44	Screw, No. 6-40 x 9/16″ fil. hd., with lock washer, for fastening top of contact block to contact frame	55560-10 53029-26
45	Screw, No. 8-32 x ½″ fil. hd., with lock washer, for fastening spectacle beam bearing to magnet supporting bracket	28989-23 53029-21
46	Bearing, for spectacle beam	56603-1
47	Lead Complete, for contact groups	5075-29 Gr. 1
48	Bracket	59210
49	Strap Complete, for holding glass case in place, includes fittings for fastening to mechanism frame	54934-1 Gr. 1
50	Screw, ¼″-20 x 1½″ fil. hd., with washer and spanner nut, for fastening magnet supporting bracket to mechanism frame at bottom	45572-40 42840-14 53029-22 1225-178
51	Washer, for strap Fig. 49	43083-5
52	Lock Washer, for strap Fig. 49	53029-25
53	Nut, 5/16″-24, hex., for fastening strap Fig. 49 to mechanism frame	52896-2
54	Gasket, tubular rubber, for use between reflector glass and holder	

(Continued on following page)

February 1948 GENERAL RAILWAY SIGNAL COMPANY

Type SC Signal Mechanisms

Three-Position, Neutral-Neutral
For Compound or Stepped Lens Signal Units

Drawing references are shown for convenience in checking shipping lists and invoices.

Fig. No.	Name	Drawing Reference
	Order by plate, figure number and name	
55	Screw, No. 10-32 x 3/8″ fil. hd., with lock washer, for fastening ring to frame	12563-22 53029-3
56	Screw, No. 10-32 x 3/8″ fil. hd., drilled for seal, with washer, for fastening ring to frame	12563-50 53029-3
57	Ring, for retaining cover glass	2254-3
58	Clip, for fastening leads	53114-4
59	Gasket, tubular rubber, for use between frame and cover glass	52983-4
60	Screw, 5/16″-18 x 7/8″ rd. hd., for bail Fig. H	3628-7
61	Cover Glass, for sealing reflector unit	924-22
62	Gasket, tubular rubber, for use between lens and plugboard	52983-5
63	Ring, for holding lens in plugboard	59229
64	Screw, 1/4″-20 x 1 1/4″ fil. hd., with lock washer, for fastening and sealing plugboard to mechanism frame	45048-18 53029-42
65	Lens, 4 15/32″ dia., clear, for compound lens signals only	54249-4
66	Clip, for holding ring Fig. 63	18547-61
67	Screw, 1/4″-20 x 1 1/16″ lg., with lock washer, for fastening ring in place	34456-3 53029-42
68	Screw, 1/4″-20 x 5/8″ fil. hd., with lock washer, for fastening cone to plugboard	45048-6 53029-22
69	Screw, 1/4″-20 x 1″ fil. hd., with lock washer, for fastening plugboard to mechanism frame	45572-14 0510-1
70	Plate, insulating, for plugboard	59212
71	Spacer, for screw Fig. 73 and stud on plugboard	50062-8
72	Nut, No. 8-32 hex., with lock washer, for stud on plugboard	28948-1 53029-21
73	Screw, No. 8-32 x 1 5/8″ fil. hd., with lock washer, for fastening insulating plate to plugboard	28989-11 53029-21
74	Screw, 1/4″-20 x 1 1/4″ fil. hd., with lock washer, for fastening plugboard to mechanism frame	45572-15 0510-1
75	Clip, shipping	15795-40

(Continued on following page)

GENERAL RAILWAY SIGNAL COMPANY February 1948

Type SC Signal Mechanisms

Three-Position, Neutral-Neutral
For Compound or Stepped Lens Signal Units

Drawing references are shown for convenience in checking shipping lists and invoices.

Fig. No.	Name	Drawing Reference
	Order by plate, figure number and name	
76	Spring, retaining, for use with clip Fig. 75	51107-14
77	Nut, $\frac{5}{16}$"-18 hex., for screw Fig. 80	29954-2
79	Bracket, spectacle stop	34418-59
80	Screw, $\frac{5}{16}$"-18 x 1½" hex. hd., for fastening coil to pole shoe	2878-2
81	Screw, No. 8-32, collar hd., for fastening armature pivot support Fig. 82 to armature	53829-7
82	Support, for armature pivot	59230
83	Bearing Plate, for armature bearing	56603-2
84	Needle, for use as armature bearing	56602-3
85	Screw No. 8-32 x ½" lg., with hex. nut and washers, for fastening spectacle to spectacle beam Fig. 15	3628-6 28948-1 53029-21 1225-148
86	Color Disc Complete, red, A.A.R. Standard, assembled in retaining cup	53073 Gr. 2
86a	as above, except yellow, with one side depolished, A.A.R. Standard	53073 Gr. 12
86b	same as Fig. 86, except green, pre-cracked, A.A.R. Standard	53073 Gr. 3
86c	same as Fig. 86, except purple, pre-cracked, A.A.R. Standard.	53073 Gr. 7
87	Bracket, spectacle stop, for red position	34418-35
88	Spring, as shown, for armature pivot support	586-127
89	Screw, No. 2-56 x ¼" fil. hd., with hex. nut and washer for fastening stop Fig. 90 to armature pivot support Fig. 82	55222-16 15649-2 53029-34
90	Stop, for armature pivot support Fig. 82	56986
91	Screw, No. 8-32 x ⅞" long., with hex. nut and washer, for holding spectacle to beam Fig. 15	3628-5 28948-1 53029-21
92	Lead Complete, as shown	5075-32 Gr. 1
93	Screw, No. 10-32 x ⅞" sq. hd., for use as terminal post	351-10

(Continued on following page)

February 1948 GENERAL RAILWAY SIGNAL COMPANY

Type SC Signal Mechanisms

Three-Position, Neutral-Neutral
For Compound or Stepped Lens Signal Units

Drawing references are shown for convenience in checking shipping lists and invoices.

Fig. No.	Name	Drawing Reference
	Order by plate, figure number and name	
94	Nut, No. 10-32 hex. for screw Fig. 93	40796
95	Washer, for screw Fig. 93	5046-5
96	Screw, 1/4″-20 x 1 1/4″ fil. hd., with washer, and spanner nut, for fastening magnet supporting bracket to mechanism frame at top, also for fastening clip Fig. 58	45572-34 42840-14 53029-22 1225-2
97	Cover Glass, flat, for use in stepped lens signals only	924-17
98	Screw, No. 10-32 x 5/8″ slotted hex. hd., with lock washer, for fastening contact frame to bracket Fig. 48	13006-39 53029-3
99	Spring, for snubber	586-147
100	Nut, 3/8″-32 x 5/32″ tk. hex., for snubber	43238-3
101	Snubber Complete, includes spring and plunger, for snubbing spectacle beam Fig. 15	59143 Gr. 1
102	Washer, stop for spring Fig. 103	31036-1
103	Spring, for screw Fig. 91	586-130
104	Washer, for screw Fig. 91	493-16
105	Plate, for use between spectacle and spectacle beam Fig. 15	59248
106	Support, for spectacle beam Fig. 15	59230-1
107	Washers, for use on spectacle beam support Fig. 106	590-85 22539-14
108	Cup Washer, stop for springs Figs. 88 and 109	22539-11
109	Spring, for spectacle beam pivot	586-131
110	Washer, for spectacle beam pivot	590-73
111	Needle, for spectacle beam	56602-5
112	Spring, as shown, for upper and lower supports	786-270
113	Spring, as shown, for upper and lower supports	786-271

PLATE H2779

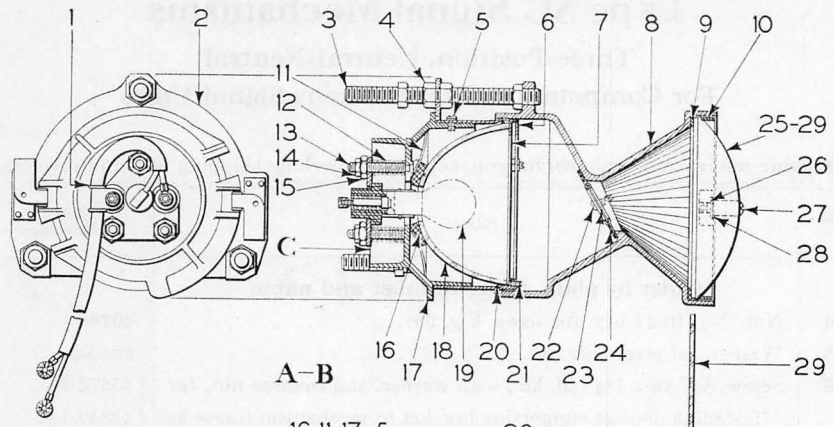

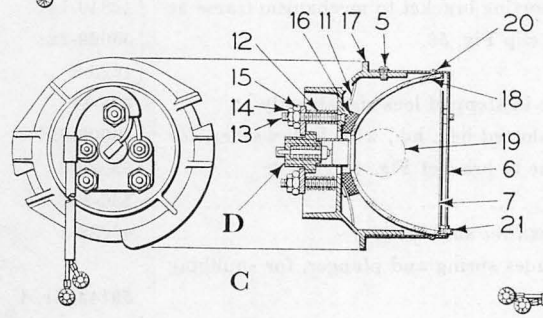

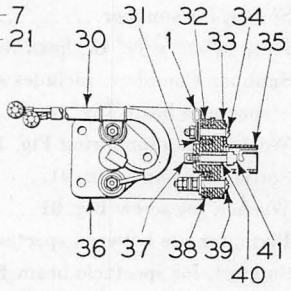

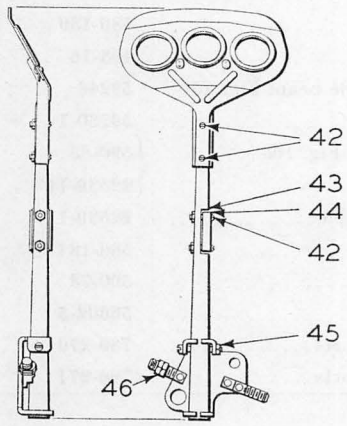

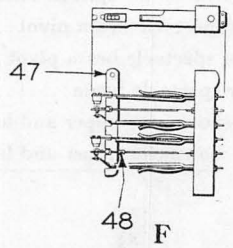

Detail Parts

Compound and Stepped Lens Signal Units

Detail Parts

Lamps are not included with reflector and lens units complete and must be ordered separately. Refer to Section H, Part 39 for order references on lamps.

Drawing references are shown for convenience in checking shipping lists and invoices.

Fig. No.	Name	Drawing Reference
	Order by plate, figure number and name	
A	Reflector and Lens Unit Complete, as shown, equipped with red disc Fig. 23, and lens Fig. 25 for compound lens inoperative signal units	59189 Gr. 1
A1	as above, except with yellow disc	59189 Gr. 2
A2	same as Fig. A except with green disc	59189 Gr. 3
A3	same as Fig. A except with lunar white disc	59189 Gr. 4
B	Reflector and Lens Unit Complete, equipped with red disc Fig. 23 and glass Fig. 29, for stepped lens inoperative signal unit	59189-1 Gr. 1
B1	as above, except with yellow disc	59189-1 Gr. 2
B2	same as Fig. B except with green disc	59189-1 Gr. 3
B3	same as Fig. B except with lunar white disc	59189-1 Gr. 4
C	Reflector Holder Complete, for inoperative reflector and lens units also for operative mechanisms	59129 Gr. 1
D	Lamp Receptacle Complete, for reflector holder	53058-18 Gr. 1
E	Spectacle Complete, for three position polar-neutral and three position neutral-neutral mechanisms	59127 Gr. 2
F	Contact Group Complete, with two dependent front and back contacts	59132-1 Gr. 1
1	Clip, for lead	53114-1
2	Reflector Plate, for fastening reflector unit to frame	59131 Gr. 1
3	Stud, $\frac{3}{8}$″-24 for fastening reflector and lens unit to case	49476-78
4	Nut, $\frac{3}{8}$″-24 hex. for stud	52822-6
5	Screw, No. 6-32 x $\frac{1}{4}$″ binding hd., with lock washer, for fastening bezel ring Fig. 6 to holder Fig. 17	54197-1 53029-1
6	Bezel Ring Complete, retainer for reflector	59130 Gr. 1
7	Washer, for use between reflector, and bezel ring Fig. 6	1225-146
8	Reflector and Lens Frame, for holding reflector unit	59247
9	Gasket, for lens Fig. 25 or glass Fig. 29	13014-244

(*Continued on following page*)

GENERAL RAILWAY SIGNAL COMPANY February 1948

Compound and Stepped Lens Signal Units

Detail Parts

Drawing references are shown for convenience in checking shipping lists and invoices.

Fig. No.	Name	Drawing Reference
	Order by plate, figure number and name	
10	Ring for retaining lens	59229
11	Spring Washer, as shown	590-75
12	Spring, as shown, for stud Fig. 13	586-140
13	Stud, No. 10-32, for fastening receptacle to holder Fig. 17	441-120
14	Lock Nut, No. 10-32 x 3/8" hex., for stud Fig. 13	40796
15	Nut, No. 10-32 x 1/2" hex. for stud Fig. 13	46277-1
16	Felt Washer, for use behind reflector	1533-32
17	Holder, for reflector Fig. C	59207
18	Reflector, as shown	53122
19	Incandescent Lamp, 2-pin, candelabra, single contact, bayonet base. See Section H, Part 39 for ordering references	34866
20	Rubber Tubing, for use between bezel ring and reflector	
21	Screw, 1/8"-56, headless, for bezel ring	5100-37
22	Screw, No. 8-32 x 5/16" rd. hd., with washer, for fastening color disc to lens frame	2553-9 53029-4
23	Color Disc Complete, red, A.A.R. Standard, assembled in retaining cup	53073 Gr. 2
23a	as above, except yellow with one side depolished, A.A.R. Standard	53073 Gr. 12
23b	same as Fig. 23 except green, pre-cracked, A.A.R. Standard	53073 Gr. 3
23c	same as Fig. 23 except lunar white, A.A.R. Standard	53073 Gr. 14
24	Bezel Ring, for holding color disc in place	59243
25	Lens, 4 15/32" dia. clear glass, for compound lens signal units only	54249-4
26	Clip, for holding retainer ring in place	18547-61
27	Screw, 1/4"-20, for lens ring	34456-3
28	Washer, for screw Fig. 27	53029-22
29	Glass, flat, for stepped lens units	924-17
30	Lead Complete, for receptacle	5075-28 Gr. 1
31	Washer, for use under clip	1225-26
32	Washer, for screw Fig. 34	493-142
33	Block, only, for receptacle,	53091-2

(Continued on following page)

Compound and Stepped Lens Signal Units

Detail Parts

Drawing references are shown for convenience in checking shipping lists and invoices.

Fig. No.	Name	Drawing Reference
	Order by plate, figure number and name	
34	Screw, No. 8-32 x 1″ rd. hd., with hex. nut and washers, for receptacle	2553-1 3891-1 43058 2534-1
35	Receptacle, only	34864-13
36	Plate, for receptacle	53104
37	Terminal, for receptacle	53108
38	Washer, for receptacle	493-18
39	Screw, No. 8-32 x 1¼″ rd. hd., with hex. nut and washers, for receptacle	2553-23 3891-1 43058 2534-1
40	Spring, for receptacle	786-64
41	Plunger for receptacle	53107-5
42	Screw, No. 4-40 x ⅝″ rd. hd., with hex. nut, for spectacle	59242 59241
43	Washer, for stop Fig. 44	493-181
44	Stop, for spectacle	59216
45	Screw, No. 6-32 x 15/16″ fil. hd., with hex. nut, for bracket	3931-70 37404-1
46	Nut, No. 14-40 x ⅛″ tk. hex., for studs on receptacle	53084-1
47	Pusher, for contact group	55863-20
48	Clip, for pusher	56025-1

PLATE H2783

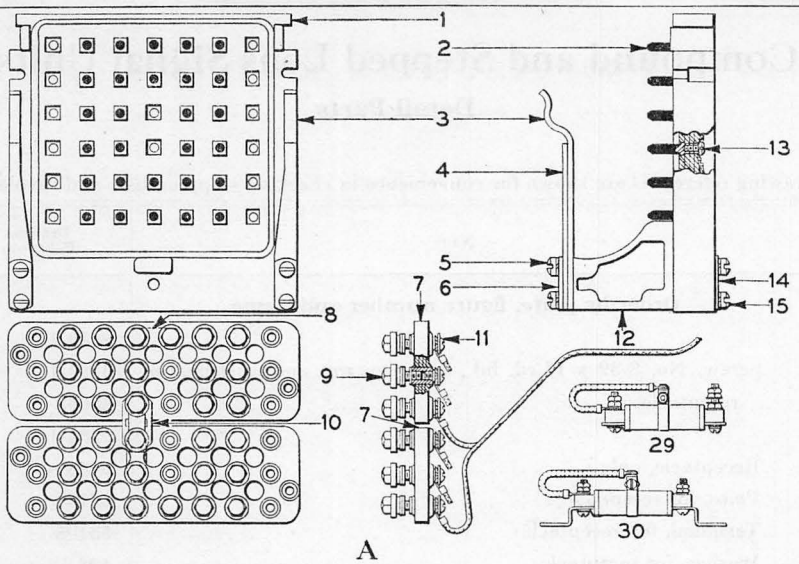

A

DOUBLE TERMINAL BOARD AND HOUSING PLUGBOARD

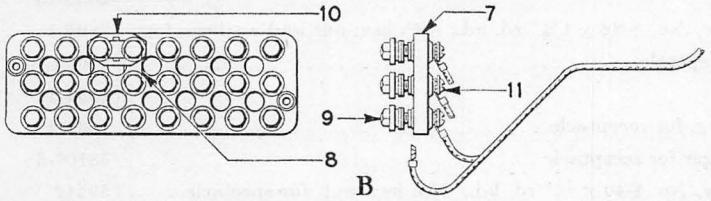

B

SINGLE TERMINAL BOARD AND HOUSING PLUGBOARD

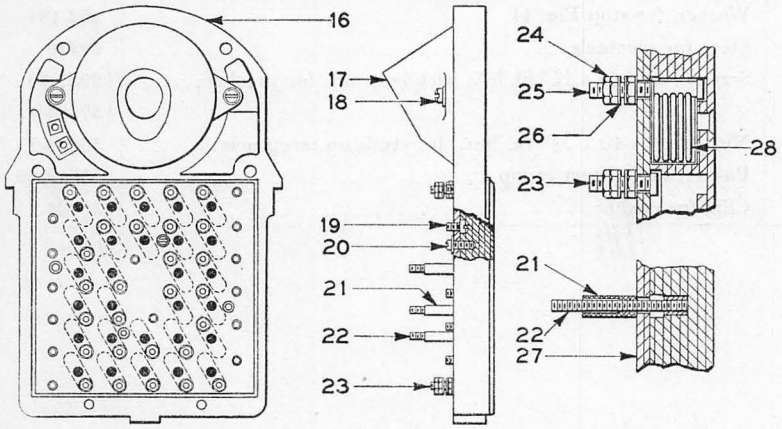

C

MECHANISM PLUGBOARD

SC Signal Plugboard Groups

February 1948 GENERAL RAILWAY SIGNAL COMPANY

Type SC Color-Light Signal

Housing and Mechanism Plugboard Groups

When ordering complete plugboard groups for **REPLACEMENT**, give the drawing number and circuit number stamped on the housing and mechanism nameplates in addition to the regular catalog reference.

Resistance units, Figs. 29 and 30, are not included with housing plugboard groups and must be ordered separately.

Drawing references are shown for convenience in checking shipping lists and invoices.

Fig. No.	Name	Drawing Reference
	Order by plate, figure number and name	
A	Double Terminal Board and Housing Plugboard Group Complete. For use with three-position polar-neutral or neutral-neutral mechanisms as shown on Plates H2763 and H2769. Specify drawing number and circuit number on name plate of housing	59137-1
B	Single Terminal Board and Housing Plugboard Group Complete. For three-position polar-neutral or neutral-neutral mechanisms as shown on Plates H2763 and H2769. Specify drawing number and circuit number on name plate of housing	59137
C	Mechanism Plugboard Group Complete. For three-position polar-neutral and neutral-neutral mechanisms as shown on Plates H2763 and H2769. Specify drawing number and circuit number on name plate of housing	59139-1
1	Housing Plugboard, for use on Figs. A and B	59205
2	Plug, as shown, for plug coupling in mechanism plugboard contact spring	52297-4
3	Spring, right-hand, for holding mechanism in place	16111-69
3a	as above, except left-hand	16111-68
4	Spring, support for springs Figs. 3 and 3a	16111-70
5	Screw, $\frac{5}{16}$″-24 x 1″ fil. hd., with lock washer, for fastening springs to support	381-1 0623-1
6	Strap, support for springs	51432-64
7	Terminal Board, for Figs. A and B	59209

(Continued on following page)

GENERAL RAILWAY SIGNAL COMPANY February 1948

Type SC Color-Light Signal

Housing and Mechanism Plugboard Groups

Drawing references are shown for convenience in checking shipping lists and invoices.

Fig. No.	Name	Drawing Reference
	Order by plate, figure number and name	
8	Connector, for connecting two terminal board contacts together	4906-20
9	Screw, No. 14-24, insulated hd., with lock washers. Used as terminal post	56418-2 53029-22
10	Lightning Arrester Complete	59134 Gr. 1
11	Screw, No. 14-24 x 3/8" rd. hd. with washers, used as terminal post	50595-8 53029-22 53029-35
12	Support, for holding springs	59234
13	Screw, No. 10-32 x 1/4" binding hd. for fastening plug to plugboard and lead to plug. Sweated in assembly	58163-3
14	Strap, as shown	51432-65
15	Screw, 5/16"-24 x 1 7/8" fil. hd., with lock washer, for fastening support to plugboard	381-3 0623-1
16	Mechanism Plugboard, for mechanism plugboard Fig. C	59204-1
17	Cone, for mechanism plugboard	58690-1
18	Screw, 1/4"-20 x 5/8" fil. hd., with washer, for fastening cone to plugboard	45048-6 53029-22
19	Screw, No. 12-24 x 3/8" thread cutting, shakeproof, for filling holes where contact springs are not used	56190-6
20	Screw, No. 8-32 x 5/8" fil. hd., with washer, for fastening plate to plugboard	28989-12 53029-21
21	Spacer, for stud Fig. 22	50062-7
22	Stud, No. 8-32, for attaching outer insulating plate (not shown)	879-58
23	Screw, No. 10-32 x 7/8" sq. hd., used as terminal post for internal wiring when contact springs are not used	351-24
24	Nut, No. 10-32 hex. for screws Figs. 23 and 25	40796
25	Screw, No. 10-32 x 1 9/16" sq. hd., used as terminal post	351-22
26	Washer, No. 10, for screws Figs. 23 and 25	5046-5
27	Plate, insulating cover for contact springs	59211-1

(Continued on following page)

February 1948 GENERAL RAILWAY SIGNAL COMPANY

Type SC Color-Light Signal

Housing and Mechanism Plugboard Groups

Drawing references are shown for convenience in checking shipping lists and invoices.

Fig. No.	Name	Drawing Reference
	Order by plate, figure number and name	
28	Contact Spring	59228
29	Resistance Unit Complete, approx. 1 ohm resistance, 2.5 amps. maximum. For mounting on single terminal board	55945-2 Gr. 1
29a	as above, except approx. 2 ohms resistance, 1.75 amps. maximum	55945-2 Gr. 2
29b	same as Fig. 29, except approx. 5 ohms resistance 1.00 amps. maximum	55945-2 Gr. 3
30	Resistance Unit Complete, approx. 1 ohm resistance 2.5 amps. maximum. For mounting on double terminal board	55945-3 Gr. 1
30a	as above, except approx. 2 ohms resistance, 1.75 amps. maximum	55945-3 Gr. 2
30b	same as Fig. 30, except approx. 5 ohms resistance, 1.00 amp. maximum	55945-3 Gr. 3

PLATE H2791

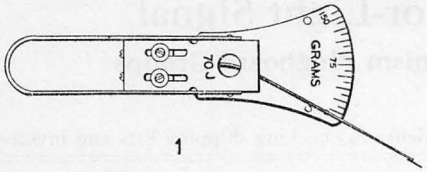

1

Gram Gauge

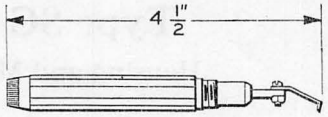

2

Mailman's Gauge

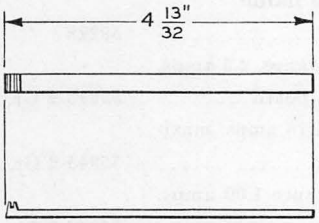

3

Contact Adjuster

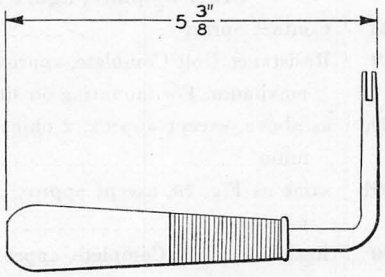

4

Contact Stop Adjuster

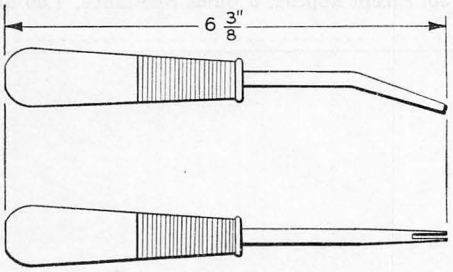

5

Contact Spring Adjuster

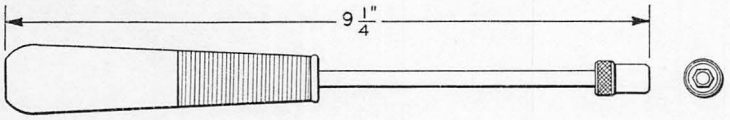

6

Socket Wrench

Adjusting Tools For
Type SC Signal Mechanisms

February 1948 GENERAL RAILWAY SIGNAL COMPANY

Adjusting Tools

For Type SC Signal Mechanisms

Drawing references are shown for convenience in checking shipping lists and invoices.

Fig. No.	Name	Drawing Reference
	Order by plate, figure number and name	
A	Tool Kit Complete, includes one each of Figs. 1 to 6	7000-15 Gr. 1
1	Gram Gauge, for checking contact pressure	55412-4
2	Mailman's Gauge, for checking armature weight	55412-3
3	Contact Adjuster, for final adjustment	47951-36
4	Contact Stop Adjuster	47951-38
5	Contact Spring Adjuster	47951-35
6	Socket Wrench, for tightening nuts on inside mechanisms	47951-37

Memoranda

Type P Color-Light Switch Signal

NOTE: Lamps Fig. 12 and anchor bolts Fig. 15 are not furnished with signal units complete and must be ordered separately.

Drawing references are shown for convenience in checking shipping lists and invoices.

Fig. No.	Name	Drawing Reference
	Order by plate, figure number and name	
A	Type P Color-Light Switch Signal Complete, two-indication, two direction, equipped to give a red and green color indication. Specify by numbers shown on drawing, space in which each color is to be used. Signal has 5⅜″ dia. roundels and inverted lenses. Includes base Fig. 14 and conduit connection to trunking. Lamps Fig. 12 and anchor bolts Fig. 15 are not included and must be ordered separately	36722–28 Gr. 1 44515–1
A1	as above, except equipped to give a lunar white and yellow color indication	36722–28 Gr. 2 44515–1
A2	same as Fig. A, except equipped to give a color indication as specified	36722–28 44515–1
B	Terminal Block Complete for Fig. A. Four required	52084 Gr. 3
C	Lens Unit Complete, as shown. Roundel, red 5⅜″ in diameter, gives 20° deflection. Inner lens, clear, 5⅜″ in diameter. Lamp bulb is not included and must be ordered separately	36762–9 Gr. 1
C1	as above, except equipped with green roundel	36762–9 Gr. 2
C2	same as Fig. C except equipped with yellow roundel	36762–9 Gr. 3
C3	same as Fig. C except equipped with lunar white roundel	36762–9 Gr. 4
1	Terminal Block, only, for Fig. B	47508–10
2	Screw, No. 14-24 x 1⅞″ sq. hd., used as terminal post	350–6
3	Nut, No. 14-24 x $\frac{5}{16}$″ th., hex. for terminal post	42843–1
4	Nut, No. 14-24 x $\frac{3}{16}$″ th. hex., for terminal post	42839–1
5	Washer, for terminal post	1225–2
6	Conduit Coupling, ¾″, for trunking	45688–11
7	Conduit, ¾″ single strip, length as specified	43368–5
8	Coupling Complete, 45°, for ¾″ conduit	44515–1
9	Screw, No. 14-24 x ⅞″ fil. hd., with lock washer, for fastening terminal block in case	0504–2 0510
10	Insulating Washer, for terminal block	51041–5

(*Continued on following page*)

GENERAL RAILWAY SIGNAL COMPANY June 1938

Type P Color-Light Switch Signal

Drawing references are shown for convenience in checking shipping lists and invoices.

Fig. No.	Name	Drawing Reference
	Order by plate, figure number and name	
11	Screw, No. 14-24 x 7/8″ rd. hd., with lock washer, for fastening lens unit to case	0658 0510
12	Electric Lamp Bulb, 11.3 V, 12.4 W, single filament, S-8 bulb, single contact, candelabra bayonet two-pin base. Above is recommended lamp for this signal. Lamps of lower voltage rating may be furnished when specified	34866-32
13	Case Complete, includes screws for fastening to base	27470-5 Gr. 1
14	Base, as shown	21211-4
15	Anchor Bolt, 3/4″, with hex. nut. Specify length of bolt required	
16	Screw, No. 14-24 x 1/2″ rd. hd., with hex. nut and two washers used for plugging opening for coupling Fig. 8	21029 48569 47845
17	Screw, No. 10-32 x 1/2″ rd. hd., for fastening plate Fig. 35 to bracket	2438-1
18	Washer, for screw Fig. 17	40791
19	Nut, No. 10-32 x 1/8″ th., hex., with lock washer, for screw Fig. 17	577-2 0622
20	Nut, No. 8-32 x 1/8″ th. hex., with lock washer, for screw Fig. 21	3891-1 43058
21	Screw, No. 8-32 x 1/2″ rd. hd., for fastening receptacle to plate	3827-2
22	Washer, for screw Fig. 23	2534-1
23	Screw, No. 8-32 x 7/8″ rd. hd., used as terminal post for receptacle	29537-1
24	Outer Bezel Ring, as shown	43983-20
25	Roundel, 5 3/8″ diameter, red, 20° deflecting	9238-33
25a	as above, except green	9238-35
25b	same as Fig. 25, except yellow	9238-34
25c	same as Fig. 25 except lunar white	9238-37
26	Felt, 1/4″ x 1/4″ x 1 1/2″ long, four pieces required for roundel	
27	Gasket, rubber, for roundel	13014-46
28	Screw, No. 14-24 x 1 1/2″ sq. hd., for fastening ring Fig. 30 to outer bezel ring	3034-5
29	Nut, No. 14-24 x 3/16″ hex., for screws Figs. 28 and 37	42839

(*Continued on following page*)

June 1938 GENERAL RAILWAY SIGNAL COMPANY

Type P Color-Light Switch Signal

Drawing references are shown for convenience in checking shipping lists and invoices.

Fig. No.	Name	Drawing Reference
	Order by plate, figure number and name	
30	Ring, as shown	43983–21
31	Screw, No. 14-24 x 5/8″ rd. hd., with lock washer, for fastening inner bezel ring to ring, Fig. 30	1411–7 0510
32	Inner Bezel Ring, as shown	43983–5
33	Lens, clear, 5 3/8″ dia., inverted, 2 1/4″ focus	47585–3
34	Receptacle, single contact, bayonet candelabra, for lamp	34864–6
35	Plate, for supporting lamp receptacle	45955–8
36	Bracket, for plate, Fig. 35	49092–6
37	Screw, No. 14-24 x 3/4″ sq. hd., for fastening bracket to inner bezel ring	3034–3
38	Washer, for screw Fig. 37	1225–2

Memoranda

Section H, Part 29

Highway Crossing Signals with Types XC and XD Units

Supersedes Section H, Part 29, dated December 1935
and
Catalog Section in Bulletin 165, dated May 1931

General Railway Signal Company
Printed in U. S. A.

Highway Crossing Signals with Types XC and XD Units

Foreword and General Information

The Type XC Color-light Signal Units shown on H2937, Fig. A are the latest design and when used with Highway Crossing Signals shown on Plate H2916 they conform with all requirements of the A.A.R. Signal Section.

The Type XD Signal Units shown on Plate H2937, Fig. B are equipped with backlights, otherwise they are identical to the Type XC Units.

The Type XA unit is superseded by the Type XC and the Type XB is superseded by the Type XD, the essential difference being provisions made for installing Phankill units in the Types XC and XD units if required.

Types XA and XB Signal Units are shown on Plate H2935 for ordering replacement parts only.

The Phankill unit which minimizes the effect of illumination by reflection from external light may be installed either at the factory or in the field. No alterations are necessary to the signal units to install these units.

Signal units are mounted on A.A.R. cross arms as shown on Plate H2926, unless otherwise specified. This cross arm has a built-in junction box which simplifies wiring and replaces a separate box which was heretofore mounted on the cross arm.

Clamp type elbows are provided on the cross arm for aligning the light beam both horizontally and vertically.

The signal unit is light-weight and water-tight, consisting of a die-cast case and door with hood, receptacle for lamp, reflector, colored roundel (and backlight on Type XD only). The door opens at the front to give easy access to all interior parts of the signal unit for inspection, cleaning reflector, renewing lamp, etc.

The glass combinations that can be furnished on the Types XC and XD Signal Units are as follows:

(a) 8 3/8" dia., red, 30 degree spredlite roundel with 15 degree spread on each side.

(b) 8 3/8" dia., red, 30 degree spredlite roundel with 15 degree downward deflection.

(c) 8 3/8" dia., red, 20 degree spredlite roundel with 10 degree spread on each side and a downward deflection of 32 degrees.

(d) 8 3/8" dia., red, 20 degree deflecting roundel.

(e) 8 3/8" dia., red, 70 degree spredlite roundel with 35 degree spread on each side.

(f) 8 3/8" dia., red, 160 degree spredlite roundel with 80 degree spread on each side and a downward deflection of 12 degrees.

The glass combinations that can be furnished on the backlights for Type XD Signal Units are as follows:

(a) 5 3/8" dia., red, 30 degree lens.
(b) 5 3/8" dia., red, 45 degree lens.

The 30 degree back spredlite lens has a spread of 15 degrees to each side or a total spread of 30 degrees and is desirable for straight road crossings or center-of-road locations. The 45 degree back deflecting lens has a spread of 45 degrees to one side only and is required on curved approaches.

The common control devices which are used in connection with Highway Crossing Signal installations are not shown in this section but can be found elsewhere in our catalog as follows:

1. Interlocking Relays— Volume 2, Section E, Part 23.
2. Flashing Relays— Volume 2, Section E, Part 23.
3. Track and Line Relays—Volume 2, Section E, Parts 21 and 31.
4. Power Transfer Relays—Volume 2, Section E, Part 21.
5. Power-Off Relays— Volume 2, Section E, Part 24.
6. Rectifiers— Volume 6, Section P, Part 17.
7. Transformers— Volume 6, Section P, Part 1.
8. Cases and Housings— Volume 2, Section E, Part 9.
9. Cable Posts— Volume 2, Section E, Parts 7 and 9.

If any combination or part not shown is required we will gladly furnish the information upon request.

PLATE H2916

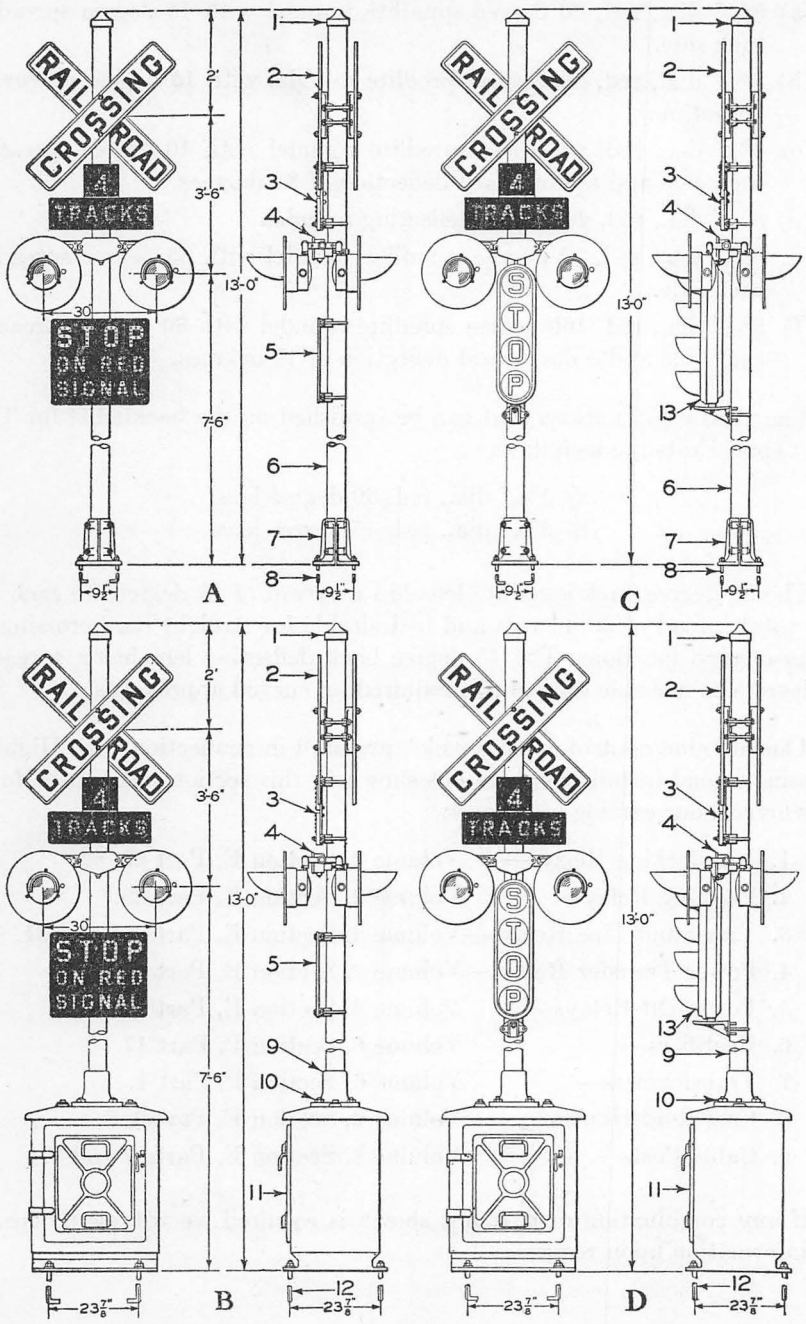

Highway Crossing Signals
With Four Type XC Units
Indication in Both Directions

October 1946 GENERAL RAILWAY SIGNAL COMPANY

Highway Crossing Signals with Four Type XC Units

Indication in both directions

NOTE—Refer to foreword and general information at the beginning of this part for glass combinations and other data.

Signals listed below will be furnished with the following unless otherwise specified:

(a) Pinnacle as shown on Plate H2939, Fig. 8.
(b) Cross arm as shown on Plate H2926, Fig. A.
(c) Backgrounds on signal units.
(d) Sidelights on signal units.
(e) Mast of 4″ dia. pipe (4½″ outside dia.).
(f) Overall height of signal 13′0″.
(g) Signal units, background and cross arm painted black.
(h) The backs of all signs white.
(j) 90 degree cast iron cross buck sign having black letters on white background.
(k) All other signs equipped with reflector buttons, having white letters on black background.
(m) Relay case for Figs. B and D, low single-door type as shown on Plate E0937. For description see Fig. 11 list of this plate.
(n) Base for signals Figs. A and C as shown on Plate H2939, Fig. E. Base for signals Figs. B and D as shown on Plate H2941, Fig. C.
(p) 1″ dia. foundation bolts.

The following items must be specified when ordering:

(a) Type of roundel required. See Page 292 for description of glass combinations.
(b) Numeral required on track sign.
(c) Voltage and wattage of lamps.

For alternate or additional parts, specify:

(a) If Phankill units are required.
(b) If reflector type crossbuck sign having black letters on white background is required.
(c) If cast iron track sign having black letters on white background is required.
(d) If reflector type marker for center-of-road location is required, shown on Plate H2930, Fig. C.
(e) If roundel guards are required, shown on Plate H2937, Fig. 26.
(f) If junction box base shown on Plate H2943, Fig. A, B or C is required in place of base Fig. 7 as shown.

Drawing references are shown for convenience in checking shipping lists and invoices.

Fig. No.	Name	Drawing Reference
	Order by plate, figure number and name	
A	Highway Crossing Signal Complete, as shown. Equipped with four Type XC signal units, cast iron crossbuck, reflector type stop and track signs. **The information requested at the beginning of this plate must be furnished with order.**	

(Continued on following page)

GENERAL RAILWAY SIGNAL COMPANY October 1946

Highway Crossing Signals with Four Type XC Units

Indication in both directions

Drawing references are shown for convenience in checking shipping lists and invoices.

Fig. No.	Name	Drawing Reference
	Order by plate, figure number and name	
B	Highway Crossing Signal Complete, as shown, with relay case. Equipped with four Type XC signal units, cast iron crossbuck, reflector type stop and track signs. **The information requested at the beginning of this plate must be furnished with order.**	
C	Highway Crossing Signal Complete, as shown. Equipped with four Type XC signal units, cast iron crossbuck, reflector track sign and illuminated stop sign. **The information requested at the beginning of this plate must be furnished with order.**	
D	Highway Crossing Signal Complete as shown, with relay case. Equipped with four Type XC signal units, cast iron crossbuck, reflector track sign and illuminated stop sign. **The information requested at the beginning of this plate must be furnished with order.**	
1	Pinnacle, for top of pole. For other pinnacles see Plate H2939.....	43957–2
2	"Railroad Crossing" Sign Complete, A.A.R., cast iron. For details and order references see Plate H2930 Fig. A.....	55256–7
2a	as above, except reflector type. For details and order references see Plate H2932 Fig. A.....	55256–16
3	"Tracks" Sign Complete, A.A.R., reflector. For details and order references see Plate H2932, Fig. D.....	55256–13
3a	as above, except cast iron. For details and order references see Plate H2930, Fig. B.....	
4	Cross Arm Complete, with four Type XC Signal Units. For details and order references see Plate H2926.....	
5	"Stop on Red Signal" Sign Complete, A.A.R., reflector type. For details and order references see Plate H2932, Fig. C.....	55256–14

(*Continued on following page*)

October 1946 GENERAL RAILWAY SIGNAL COMPANY

Highway Crossing Signals with Four Type XC Units

Indication in both directions

Drawing references are shown for convenience in checking shipping lists and invoices.

Fig. No.	Name	Drawing Reference
	Order by plate, figure number and name	
6	Pipe, 4″ (4½″ outside dia.) 12′8½″ lg., for signal. Other lengths of pipe will be furnished when specified	
7	Base Complete, for 4″ pipe Fig. 6. For details and order references see Plate H2939, Fig. E	43951–4 Gr. 2
8	Bolt, 1″-8 x 24″ lg. with hex. nut and washer, for fastening signal to foundation. For other bolts see Plate H2939	10270–1 Gr. 1 074
9	Pole and Base, 4″ pipe (4½″ outside dia.) 9′2″ lg. for use when signal is mounted on relay case. Other lengths of pipe will be furnished when specified. For details see Plate H2941, Fig. C	45935–4
10	Stud, ⅞″-9 x 4⅛″ lg., with hex. nuts and washer, for fastening base Fig. 9 to relay case. For use when relay case has wood lining in top	980–29 0297–1 0393–4
10a	as above, except 6″ lg., for use when relay case has water shield in top	36034–1 0297–1 0393–4
11	Welded Steel Relay Case Complete, low, single door type as shown on Plate E0937 and equipped with shelving as shown on Plate E0939, Fig. B, which is of adequate size for housing interlocking relay, flashing relay, lighting transformer, rectifier and A.A.R. terminals. For other relay cases see Volume 2 Plates E0932 to E0937	36006–16
12	Bolt, 1″-8 x 2′ lg., with hex., nut and washer, for fastening relay case to foundation. For other bolts see Plate H2939	10270–1 Gr. 1 074
13	Illuminated Stop Sign Complete, A.A.R. For details and order references see Plate H2929	55200

PLATE H2918

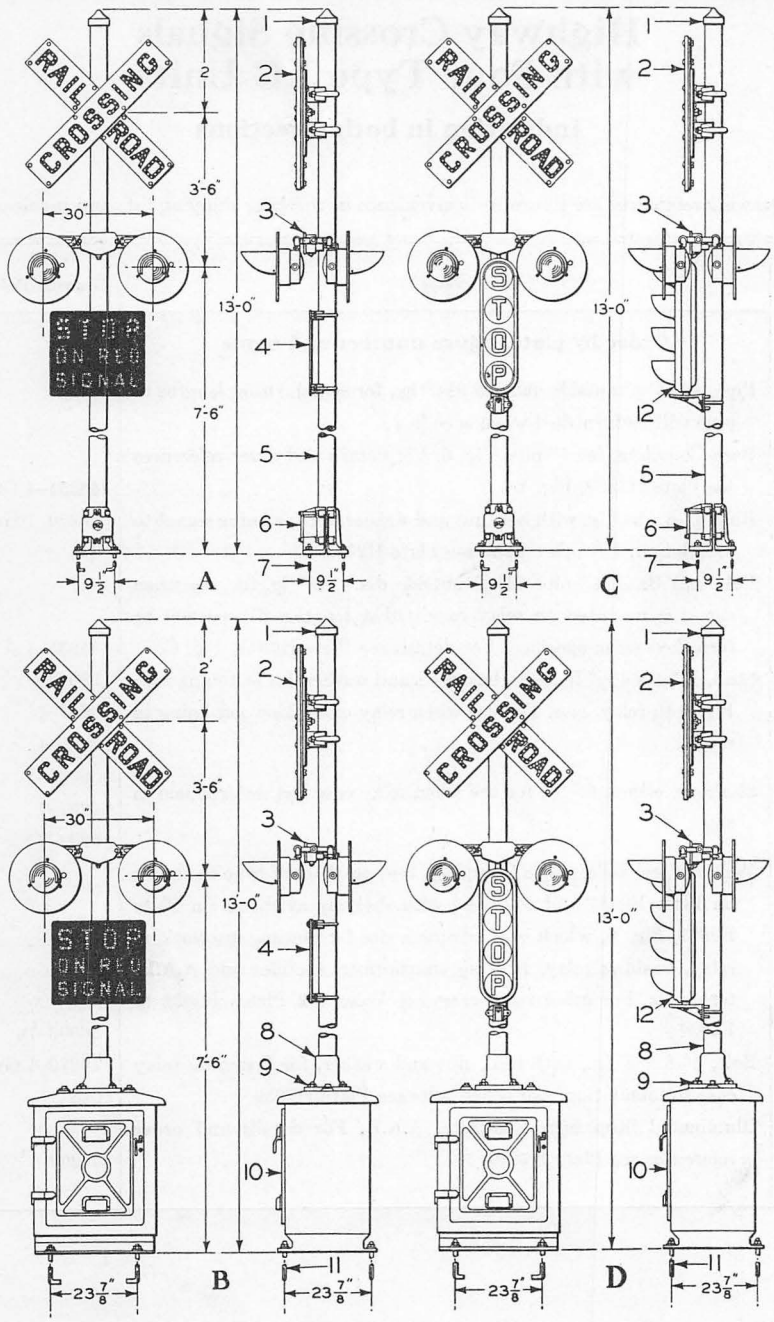

Highway Crossing Signals
With Four Type XC Units
Indication in Both Directions

October 1946 GENERAL RAILWAY SIGNAL COMPANY

Highway Crossing Signals with Four Type XC Units

Indication in both directions

NOTE—Refer to foreword and general information at the beginning of this part for glass combinations and other data.

Signals listed below will be furnished with the following unless otherwise specified:

(a) Pinnacle as shown on Plate H2939, Fig. 8.
(b) Cross arm as shown on Plate H2926, Fig. A.
(c) Backgrounds on signal units.
(d) Sidelights on signal units.
(e) Mast of 4″ dia. pipe (4½″ outside dia.).
(f) Overall height of signal 13′0″.
(g) Signal units, backgrounds and cross arm painted black.
(h) The backs of all signs white.
(j) 90 degree reflector type crossbuck sign having black letters on white background.
(k) All other signs equipped with reflector buttons, having white letters on black background.
(m) Relay case for Figs. B and D, low single-door type as shown on Plate E0937. For description see Fig. 10 list of this plate.
(n) Base for signals Figs. A and C as shown on Plate H2943, Fig. A1. Base for signals Figs. B and D as shown on Plate H2941, Fig. C.
(p) 1″ dia. foundation bolts.

The following items must be specified when ordering:

(a) Type of roundel required. See Page 292 for description of glass combinations.
(b) Voltage and wattage of lamps.

For alternate or additional parts, specify:

(a) If Phankill units are required.
(b) If reflector type marker for center-of-road location is required, shown on Plate H2930, Fig. C.
(c) If roundel guards are required, shown on Plate H2937, Fig. 26.

Drawing references are shown for convenience in checking shipping lists and invoices.

Fig. No.	Name	Drawing Reference
	Order by plate, figure number and name	
A	Highway Crossing Signal Complete, as shown. Equipped with four Type XC signal units, reflector crossbuck, reflector stop sign and junction box base shown on Plate H2943, Fig. A1. **The information requested at the beginning of this plate must be furnished with order.**	

(Continued on following page)

GENERAL RAILWAY SIGNAL COMPANY October 1946

Highway Crossing Signals with Four Type XC Units

Indication in both directions

Drawing references are shown for convenience in checking shipping lists and invoices.

Fig. No.	Name	Drawing Reference
	Order by plate, figure number and name	
B	Highway Crossing Signal Complete, as shown, with relay case. Equipped with four Type XC signal units, reflector crossbuck and reflector stop sign. **The information requested at the beginning of this plate must be furnished with order.**	
C	Highway Crossing Signal Complete, as shown. Equipped with four Type XC signal units, reflector crossbuck, illuminated stop sign and junction box base shown on Plate H2943, Fig. A1. **The information requested at the beginning of this plate must be furnished with order.**	
D	Highway Crossing Signal Complete, as shown, with relay case. Equipped with four Type XC signal units, reflector crossbuck and illuminated stop sign. **The information requested at the beginning of this plate must be furnished with order.**	
1	Pinnacle, for top of pole. For other pinnacles see Plate H2939	43957–2
2	"Railroad Crossing" Sign Complete, A.A.R., reflector type. For details and order references see Plate H2932, Fig. A	55256–16
3	Cross Arm Complete, with four Type XC signal units. For details and order references see Plate H2926	
4	"Stop on Red Signal" Sign Complete. A.A.R. reflector type. For details and order references see Plate H2932, Fig. C	55256–14
5	Pipe, 4″ (4½″ outside dia.) 12′8½″ lg., for signal. Other lengths of pipe will be furnished when specified	
6	Junction Box Base Complete. For details and order references see Plate H2943, Fig. A1	43951–8 Gr. 6
7	Bolt, 1″-8 x 24″ lg., with hex. nut and washer, for fastening signal to foundation. For other bolts see Plate H2939	10270–1 Gr. 1 074
8	Pole and Base, 4″ pipe (4½″ outside dia.) 9′2″ lg., for use when signal is mounted on relay case. Other lengths of pipe will be furnished when specified. For details see Plate H2941 Fig. C	45935–4

(Continued on following page)

October 1946 GENERAL RAILWAY SIGNAL COMPANY

Highway Crossing Signals with Four Type XC Units

Indication in both directions

Drawing references are shown for convenience in checking shipping lists and invoices.

Fig. No.	Name	Drawing Reference
	Order by plate, figure number and name	
9	Stud, 7/8″-9 x 4 1/8″ lg., with hex. nuts and washer, for fastening base Fig. 8 to relay case. For use when relay case has wood lining in top	980–29 0297–1 0393–4
9a	as above, except 6″ lg., for use when relay case has water shield in top	36034–1 0297–1 0393–4
10	Welded Steel Relay Case Complete, low, single door-type as shown on Plate E0937 and equipped with shelving as shown on Plate E0939, Fig. B which is of adequate size for housing interlocking relay, flashing relay, lighting transformer, rectifier and A.A.R. terminals. For other cases see Volume 2, Plates E0932 to E0937	36006–16
11	Bolt, 1″-8 x 2′ lg., with hex. nut and washer, for fastening relay case to foundation. For other bolts see Plate H2939	10270–1 Gr. 1 074
12	Illuminated Stop Sign Complete, A.A.R. For details and order references see Plate H2929	55200

PLATE H2920

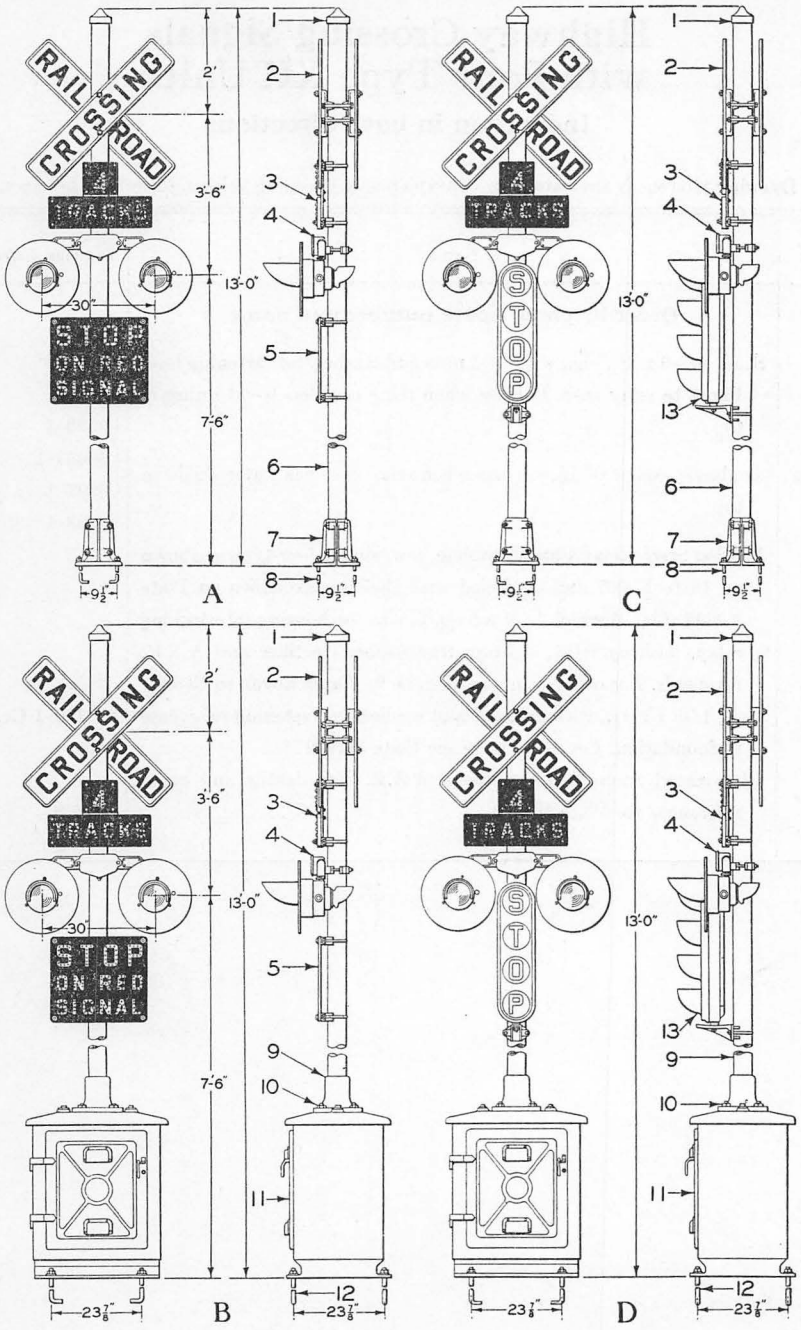

Highway Crossing Signals
With Two Type XD Units
Indication in Both Directions

December 1947 GENERAL RAILWAY SIGNAL COMPANY

Highway Crossing Signals with Two Type XD Signal Units

Indication in both directions

NOTE—Refer to foreword and general information at the beginning of this part for glass combinations and other data.

Signal listed below will be furnished with the following unless otherwise specified:

(a) Pinnacle as shown on Plate H2939, Fig. 8.
(b) Cross arm as shown on Plate H2926, Fig. C.
(c) Backgrounds on signal units.
(d) Sidelights on signal units.
(e) Mast of 4″ dia. pipe (4½″ outside dia.).
(f) Overall height of signal 13′0″.
(g) Signal units, background and cross arm painted black.
(h) The backs of all signs white.
(j) 90 degree cast iron crossbuck sign having black letters on white background.
(k) All other signs equipped with reflector buttons, having white letters on black background.
(m) Relay case for Figs. B and D, low single door type as shown on Plate E0937. For description see Fig. 11 list of this plate.
(n) Base for signals Figs. A and C as shown on Plate H2939, Fig. E. Base for signals Figs. B and D as shown on Plate H2941, Fig. C.
(p) 1″ dia. foundation bolts.

The following items must be specified when ordering:

(a) Type of roundel required. See Page 292 for description of glass combinations.
(b) Numeral required on track sign.
(c) Voltage and wattage of lamps.

For alternate or additional parts, specify:

(a) If Phankill units are required.
(b) If reflector type crossbuck sign having black letters on white background is required.
(c) If cast iron track sign having black letters on white background is required.
(d) If reflector type marker for center-of-road location is required, shown on Plate H2930, Fig. C.
(e) If roundel or lens guards are required, shown on Plate H2937, Figs. 26 and 46.
(f) If junction box base shown on Plate H2943, Figs. A, B or C is required in place of base Fig. 7 as shown.

Drawing references are shown for convenience in checking shipping lists and invoices.

Fig. No.	Name	Drawing Reference
	Order by plate, figure number and name	
A	Highway Crossing Signal Complete, as shown. Equipped with two Type XD signal units, cast iron crossbuck, reflector type stop and track signs. **The information requested at the beginning of this plate must be furnished with order.**	

(*Continued on following page*)

GENERAL RAILWAY SIGNAL COMPANY December 1947

Highway Crossing Signals with Two Type XD Signal Units

Indication in both directions

Drawing references are shown for convenience in checking shipping lists and invoices.

Fig. No.	Name	Drawing Reference
	Order by plate, figure number and name	
B	Highway Crossing Signal Complete, as shown, with relay case. Equipped with two Type XD signal units, cast iron crossbuck, reflector type stop and track signs. **The information requested at the beginning of this plate must be furnished with order.**	
C	Highway Crossing Signal Complete, as shown. Equipped with two Type XD signal units, cast iron crossbuck, reflector track sign and illuminated stop sign. **The information requested at the beginning of this plate must be furnished with order.**	
D	Highway Crossing Signal Complete, as shown, with relay case. Equipped with two Type XD signal units, cast iron crossbuck, reflector track sign and illuminated stop sign. **The information requested at the beginning of this plate must be furnished with order.**	
1	Pinnacle, for top of pole. For other pinnacles see Plate H2939	43957-2
2	"Railroad Crossing" Sign Complete, A.A.R., cast iron. For details and order references see Plate H2930, Fig. A	55256-7
2a	as above, except reflector type. For details and order references see Plate H2932, Fig. A	55256-16
3	"Tracks" Sign Complete, A.A.R., reflector. For details and order references see Plate H2932, Fig. D	55256-13
3a	as above, except cast iron For details and order references see Plate H2930, Fig. B	
4	Cross Arm Complete, with two Type XD Signal Units. For details and order references see Plate H2926	
5	"Stop on Red Signal" Sign Complete, A.A.R., reflector type. For details and order references see Plate H2932, Fig. C	55256-14

(*Continued on following page*)

October 1946 GENERAL RAILWAY SIGNAL COMPANY

Highway Crossing Signals with Two Type XD Signal Units

Indication in both directions

Drawing references are shown for convenience in checking shipping lists and invoices.

Fig. No.	Name	Drawing Reference
	Order by plate, figure number and name	
6	Pipe 4″ (4½″ outside dia.) 12′8½″ lg., for signal. Other lengths of pipe will be furnished when specified.	
7	Base Complete, for 4″ pipe Fig. 6. For details and order references see Plate H2939, Fig. E	43951–4 Gr. 2
8	Bolt, 1″-8 x 24″ lg. with hex. nut and washer, for fastening signal to foundation. For other bolts see Plate H2939	10270–1 Gr. 1 074
9	Pole and Base, 4″ pipe (4½″ outside dia.) 9′2″ lg. for use when signal is mounted on relay case. Other lengths of pipe will be furnished when specified. For details see Plate H2941, Fig. C	45935–4
10	Stud, ⅞″-9 x 4⅛″ lg., with hex. nuts and washer, for fastening base Fig. 9 to relay case. For use when relay case has wood lining in top	980–29 0297–1 0393–4
10a	as above, except 6″ lg., for use when relay case has water shield in top	36034–1 0297–1 0393–4
11	Welded Steel Relay Case Complete, low, single door-type as shown on Plate E0937 and equipped with shelving as shown on Plate E0939, Fig. B, which is of adequate size for housing interlocking relay, flashing relay, lighting transformer, rectifier and A.A.R. terminals. For other cases, see Volume 2, Plates E0932 to E0937	36006–16
12	Bolt, 1″-8 x 2′ lg., with hex. nut and washer, for fastening relay case to foundation. For other bolts see Plate H2939	10270–1 Gr. 1 074
13	Illuminated Stop Sign Complete, A.A.R. For details and order references see Plate H2929	55200

PLATE H2922

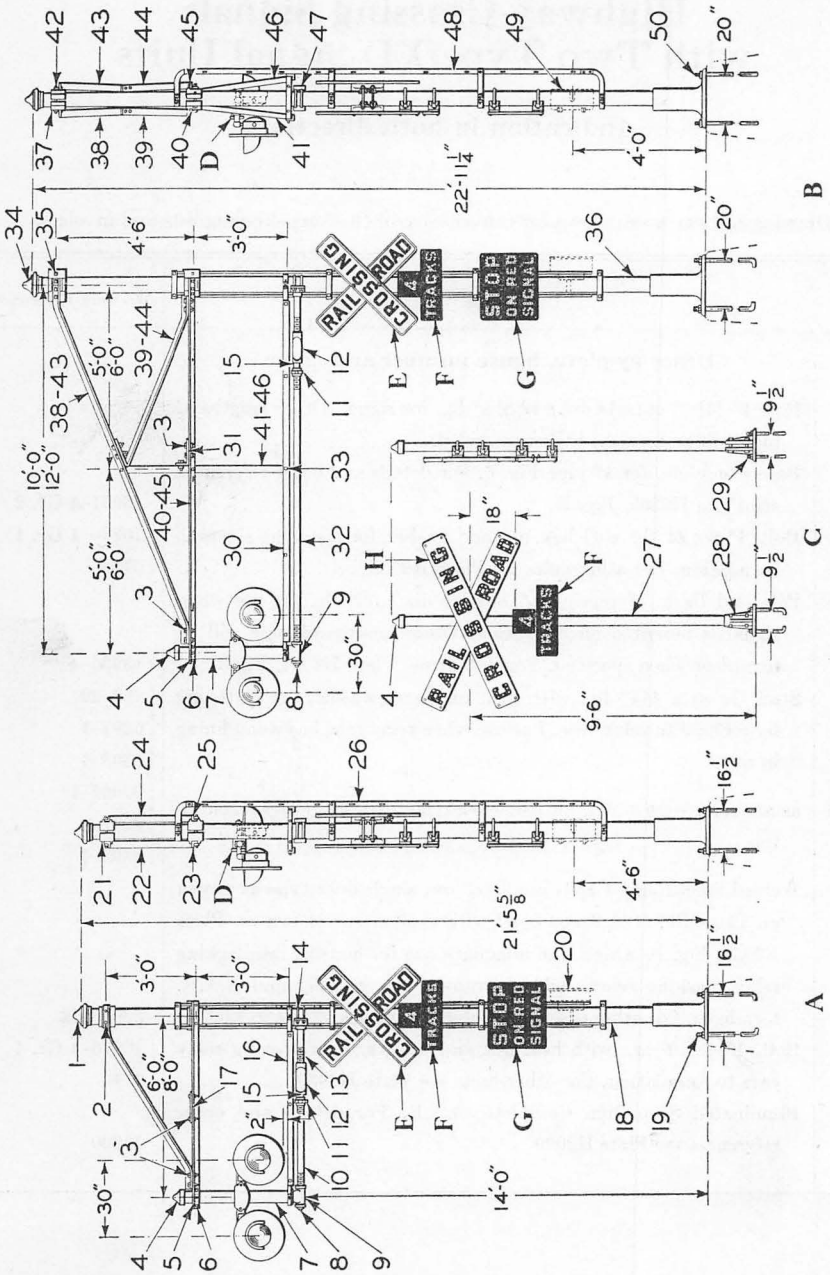

Highway Crossing Signals

October 1946 GENERAL RAILWAY SIGNAL COMPANY

Highway Crossing Signals with Four Type XC Units

Indication in both directions

NOTE—Refer to foreword and general information at the beginning of this part for glass combinations and other data.

Signals listed below will be furnished with the following unless otherwise specified:

(a) Pinnacle as shown for Figs. A and B. For Fig. C pinnacle as shown on Plate H2939, Fig. 8.
(b) Cross arm as shown on Plate H2926, Fig. A.
(c) Backgrounds on signal units.
(d) Sidelights on signal units.
(e) Mast of 6″ dia. pipe (6⅝″ outside dia.) for Fig. A.
Mast of 8″ dia. pipe (8⅝″ outside dia.) for Fig. B.
Mast of 4″ dia. pipe (4½″ outside dia.) for Fig. C.
(f) Signal units, background and cross arm painted black.
(g) The backs of all signs white.
(h) 90 degree cast iron crossbuck for signals Fig. A and B, having black letters on white background.
(j) All signs equipped with reflector buttons, except crossbucks, have white letters on black background.
(k) Base for signal Fig. A as shown on Plate H2941, Fig. B.
Base for signal Fig. B as shown on Plate H2941, Fig. A.
Base for signal Fig. C as shown on Plate H2939, Fig. E.
(m) Foundation bolts as shown.

The following items must be specified when ordering:

(a) Type of roundel required. See Page 292 for description of glass combinations.
(b) Numeral required on track sign.
(c) Voltage and wattage of lamps.
(d) Whether signal offset is to be 6′0″ or 8′0″ for Fig. A; 10′0″ or 12′0″ for Fig. B.

For alternate or additional parts, specify:

(a) If Phankill units are required.
(b) If reflector type crossbuck sign having black letters on white background is required.
(c) If cast iron track sign having black letters on white background is required.
(d) If reflector type marker for center-of-road location is required, shown on Plate H2930, Fig. C.
(e) If roundel guards are required, shown Plate H2937, Fig. 26.
(f) If junction box Fig. 20 or 49 is required.

Drawing references are shown for convenience in checking shipping lists and invoices.

Fig. No.	Name	Drawing Reference
	Order by plate, figure number and name	
A	Highway Crossing Signal Complete, as shown. Equipped with four Type XC signal units, cast iron crossbuck and reflector type stop and track signs. **The information requested at the beginning of this plate must be furnished with order.**	

(Continued on following page)

GENERAL RAILWAY SIGNAL COMPANY October 1946

Highway Crossing Signals with Four Type XC Units

Indication in both directions

Drawing references are shown for convenience in checking shipping lists and invoices.

Fig. No.	Name	Drawing Reference
	Order by plate, figure number and name	
B	Highway Crossing Signal Complete, as shown, equipped with four Type XC signal units, cast iron crossbuck and reflector type stop and track signs. **The information requested at the beginning of this plate must be furnished with order.**	
C	Highway Crossing Signal Complete, as shown. Equipped with 50 degree reflector type crossbuck and track sign	
C1	as above, except length of pipe as specified	
D	Cross Arm Complete, with four Type XC signal units. For details and order references see Plate H2926	
E	"Railroad Crossing" Sign Complete, A.A.R., cast iron. For details and order references see Plate H2930, Fig. A	55256–7
E1	as above, except reflector type. For details and order references see Plate H2932, Fig. A	55256–16
F	"Tracks" Sign Complete, A.A.R. reflector type. For details and order references see Plate H2932, Fig. D	55256–13
F1	as above, except cast iron. For details and order references see Plate H2930, Fig. B	
G	"Stop on Red Signal" Sign Complete, A.A.R. reflector type. For details and order references see Plate H2932, Fig. C	55256–14
H	"Railroad Crossing" Sign Complete, A.A.R. reflector type. For details and order references see Plate H2932, Fig. B	55256–22
1	Pinnacle, for 6″ pipe. For details and order references see Plate H2939, Fig. C	56894 Gr. 4
2	Bolt, $\frac{5}{8}$″-11 x 10″ lg., with sq. nut and lock washer, for angles Figs. 22, 24, 38 and 43	41927–3 0113–2
3	Bolt, $\frac{5}{8}$″-11 x 1$\frac{1}{2}$″ hex. hd., with hex. nut and lock washer, for angles Figs. 22, 24, 38, 39, 43 and 44, also plates Fig. 17 and 31	2891–1 645–6 0113–2

(*Continued on following page*)

October 1946 GENERAL RAILWAY SIGNAL COMPANY

Highway Crossing Signals with Four Type XC Units

Indication in both directions

Drawing references are shown for convenience in checking shipping lists and invoices.

Fig. No.	Name	Drawing Reference
	Order by plate, figure number and name	
4	Cap, for 4″ pipe, for signals Figs. A, B, and C	43957–2
5	Adapter, for pipe Fig. 7, for signals Figs. A and B	35378–12
6	Bolt, ½″-13 x 10″ hex. hd., with hex. nut and lock washer, for angles Figs. 23, 25, 40, and 45	0592–6 091–7
7	Pipe, 4″ dia. for signals Figs. A and B	11560–12
8	Pipe Plug, 2″, for tee	43349
9	Tee, for pipe Fig. 10 and 32	0699–12
10	Pipe, 2″ I.D. x 2′10 5/16″ lg., threaded both ends, for signal	
10a	as above, except 4′10 5/16″ lg.	
11	Union, 2″, for pipe Fig. 10 and 32	47919–14
12	Cover, with gasket, for condulet Fig. 15	56648
13	Pipe, 2″ I.D. x 15″ lg., threaded both ends, for signal	
14	Clamp, 6″, for pipe Fig. 13	4137–18
15	Condulet, 2″, for pipe	51917–7
16	Platform, for signal with 6′0″ offset	313–66 Gr. 1
16a	as above, except for signal with 8′0″ offset	313–66 Gr. 2
17	Plate, for angles Figs. 23 and 25	41885–55
18	Pole and Base, 6″ extra heavy pipe, 6 5/8″ outside dia., for signal Fig. A, for details and order references see Plate H2941, Fig. B.	48848–26 Gr. 2
19	Hook Bolt, 1″-8, with hex. nut and washer, for fastening signal to foundation	22172 Gr. 4 074–1
20	Junction Box Complete, for signal Fig. A. For details and order references, see Plate H2955, Fig. A	43920–6 Gr. 5
21	Block, for 6″ pipe	4354–2
22	Angle, for signal with 6′0″ offset, for use in position shown	54310–828
22a	as above, except for signal with 8′0″ offset	54310–833
23	Angle, for signal with 6′0″ offset, for use in position shown	54310–826
23a	as above, except for signal with 8′0″ offset	54310–831

(Continued on following page)

GENERAL RAILWAY SIGNAL COMPANY October 1946

Highway Crossing Signals with Four Type XC Units

Indication in both directions

Drawing references are shown for convenience in checking shipping lists and invoices.

Fig. No.	Name	Drawing Reference
	Order by plate, figure number and name	
24	Angle, for signal with 6′0″ offset, for use in position shown	54310–829
24a	as above, except for signal with 8′0″ offset	54310–834
25	Angle, for signal with 6′0″ offset, for use in position shown	54310–827
25a	as above, except for use with signal with 8′0″ offset	54310–832
26	Ladder Complete, for signal Fig. A. For details and order references see Plate H2939, Fig. H	307–6
27	Pipe, 4″ (4½″ outside dia.), 11′6″ long	
27a	as above, except length as specified	
28	Base Complete, for 4″ pipe. For details and order references see Plate H2939, Fig. E	43951–4 Gr. 2
29	Bolt, 1″-8 x 24″ lg., with hex. nut and washer, for fastening signal to foundation	10270–1 Gr. 1 074
30	Platform, for signal with 10′0″ offset	313–70 Gr. 1
30a	as above, except for signal with 12′0″ offset	313–70 Gr. 2
31	Plate, for angles Figs. 40 and 45	41885–78
32	Pipe, 2″ I.D. x 6′9 5/16″ lg., threaded both ends for signal	
32a	as above, except 8′9 5/16″ lg.	
33	Bolt, ½″-13 x 1¾″ hex. hd., with hex. nut and lock washer, for fastening platform to angles Figs. 41 and 46	16578–1 091–7
34	Pinnacle, for 8″ pipe. For details and order references see Plate H2939, Fig. C1	56894 Gr. 7
35	Screw, ¾″-10 x 1½″ hex. hd., with lock washer, for angles Figs. 38 and 43	6013–7 029–5
36	Pole and Base, 8″ pipe (8⅝″ outside dia.) for signal Fig. B. For details and order references see Plate H2941 Fig. A	48848–29 Gr. 1
37	Block, for 8″ pipe	4354–5
38	Angle, for signal with 10′0″ offset	54310–896
38a	as above, except for signal with 12′0″ offset	54310–898

(*Continued on following page*)

October 1946 GENERAL RAILWAY SIGNAL COMPANY

Highway Crossing Signals with Four Type XC Units

Indication in both directions

Drawing references are shown for convenience in checking shipping lists and invoices.

Fig. No.	Name	Drawing Reference
	Order by plate, figure number and name	
39	Angle, for signal with 10′0″ offset	54310–900
39a	as above, except for signal with 12′0″ offset	54310–902
40	Angle, for signal with 10′0″ offset	54310–892
40a	as above, except for signal with 12′0″ offset	54310–894
41	Angle, for signal with 10′0″ offset	54310–904
41a	as above, except for signal with 12′0″ offset	54310–906
42	Bolt, ¾″-10 x 8½″ hex. hd., with hex. nut and lock washer, for blocks Fig. 37	32446–16 029–5
43	Angle, for signal with 10′0″ offset	54310–897
43a	as above, except for signal with 12′0″ offset	54310–899
44	Angle, for signal with 10′0″ offset	54310–901
44a	as above, except for signal with 12′0″ offset	54310–903
45	Angle, for signal with 10′0″ offset	54310–893
45a	as above, except for signal with 12′0″ offset	54310–895
46	Angle, for signal with 10′0″ offset	54310–905
46a	as above, except for signal with 12′0″ offset	54310–907
47	Clamp, 8″, for pipe	4137–29
48	Ladder Complete, for signal Fig. B. For details and order references see Plate H2939, Fig. H	307–6
49	Junction Box Complete, for signal Fig. B. For details and order references see Plate H2955, Fig. A1	43920–6 Gr. 6
50	Hook Bolt, 1¼″-7, with hex. nut and washer, for fastening signal to foundation	22349–1 Gr. 1 0381–1

PLATE H2926

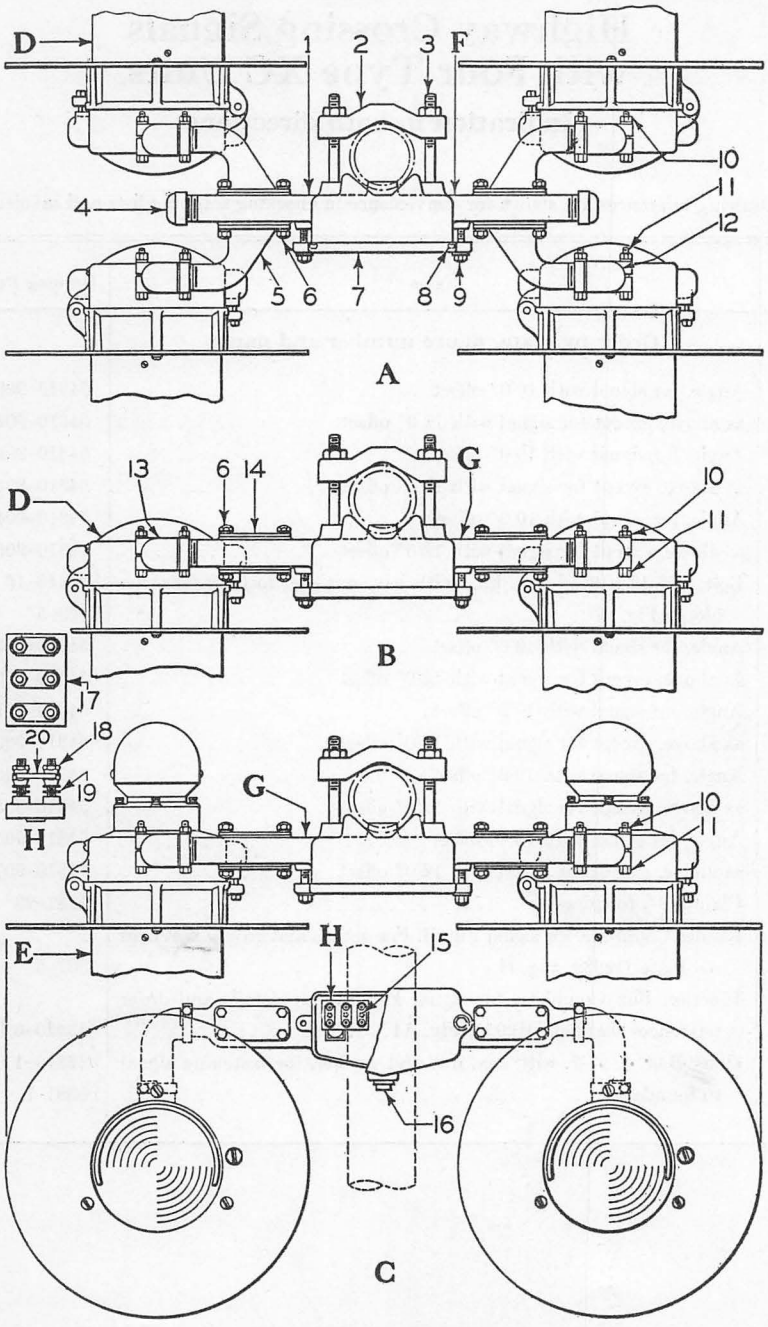

A.A.R. Cross Arm With Signal Units

October 1946 GENERAL RAILWAY SIGNAL COMPANY

A. A. R. Cross Arm with Four Type XC Units or Two Type XD Units

For indication in both directions

OR

with Two Type XC Units

for indication in one direction

NOTE—For signals with old type cross arms see Plate H2928.

Cross arms are arranged for mounting on masts of $3\frac{1}{2}$" dia. pipe (4" outside dia.), 4" dia. pipe ($4\frac{1}{2}$" outside dia.) or 5" dia. pipe ($5\frac{9}{16}$" outside dia.), also available for mounting on 6" dia. pipe ($6\frac{5}{8}$" outside dia.) with special bolts.

Cross arms listed below will be furnished with the following unless otherwise specified:

(a) Sidelights on signal units.
(b) Backgrounds on signal units.
(c) Cross arm and signal units painted black.

The following items must be specified when ordering:

(a) Type of roundel required. See Page 292 for description of glass combinations.
(b) Size of pipe on which cross arm is to be mounted.
(c) Voltage and wattage of lamps.
(d) For XD unit backlights, state whether 30 degree spredlite or 45 degree deflecting lenses are required.

For alternate or additional parts, specify:

(a) If Phankill units are required.
(b) If roundel and/or lens guards are required.

Drawing references are shown for convenience in checking shipping lists and invoices.

Fig. No.	Name	Drawing Reference
	Order by plate, figure number and name	
A	A.A.R. Cross Arm with four Type XC Signal Units Fig. D, as shown. For indication in both directions. **The information requested at the beginning of this plate must be furnished with order.**	
B	Cross Arm with two Type XC Signal Units Fig. D, as shown. For indication in one direction. **The information requested at the beginning of this plate must be furnished with order.**	

(*Continued on following page*)

GENERAL RAILWAY SIGNAL COMPANY October 1946

A. A. R. Cross Arm with Four Type XC Units or Two Type XD Units

For indication in both directions

OR

with Two Type XC Units

for indication in one direction

Drawing references are shown for convenience in checking shipping lists and invoices.

Fig. No.	Name	Drawing Reference
	Order by plate, figure number and name	
C	A.A.R. Cross Arm with two Type XD Signal Units Fig. E, as shown. For indication in both directions. **The information requested at the beginning of this plate must be furnished with order.**	
D	Type XC Color-light Signal Unit Complete. For details and order references see Plate H2937, Fig. A	55050–3
E	Type XD Color-light Signal Unit Complete. For details and order references see Plate H2937, Fig. B	55050–5
F	Cross Arm Complete, A.A.R. equipped with short elbows Fig. 12, for supporting four signal units. Specify size of pipe on which cross arm is to be mounted	48870–12 Gr. 2
G	Cross Arm Complete, equipped with long elbows Fig. 13, for supporting two signal units. Specify size of pipe on which cross arm is to be mounted	48870–13 Gr. 2
H	Terminal Block Complete, for cross arms Figs. F and G	46048–23 Gr. 7
1	Cross Arm, only, for cross arms Figs. F and G	55215–3
2	Clamp, for fastening cross arm to pole	4137–6
3	Bolt, $\frac{5}{8}$″-11 x $5\frac{1}{2}$″ sq. hd., with hex. nut, for fastening cross arm to $3\frac{1}{2}$″ pipe	0795
3a	as above, except 6″ lg., for fastening cross arm to 4″ pipe	34331
3b	same as Fig. 3, except $7\frac{1}{2}$″ lg., for fastening cross arm to 5″ pipe	0672–2
3c	same as Fig. 3, except $8\frac{13}{16}$″ lg., formed for fastening cross arm to 6″ pipe	0135–1 645
4	Cap, $1\frac{1}{4}$″, for end of cross arm Fig. F	32367–2

(*Continued on following page*)

October 1946 GENERAL RAILWAY SIGNAL COMPANY

A. A. R. Cross Arm with Four Type XC Units or Two Type XD Units

For indication in both directions

OR

with Two Type XC Units

for indication in one direction

Drawing references are shown for convenience in checking shipping lists and invoices.

Fig. No.	Name	Drawing Reference
	Order by plate, figure number and name	
5	Bracket, for supporting lamp units	55884
6	Cap Screw, 3/8"-16 x 3/4" hex. hd., with lock washer, for fastening bracket Fig. 5 and plate Fig. 14 to cross arm	0395-7 42175
7	Cover, with gasket for cross arm	49134-15 43786-2
8	Gasket, 1/2" dia. x 27" lg., for cover Fig. 7	43786-2
9	Cap Screw, 3/8"-16 x 2 1/4" hex. hd., with washer, for fastening cover to cross arm	14071-1 626-44
10	Nut, 3/8"-16 x 3/8" tk., hex., for screw Fig. 11	1156-2
11	Screw, 3/8"-16 x 2 3/4" hex. hd., for locking signal units to elbows	0430-1
12	Elbow, short, for cross arm Fig. F	53135-3
13	Elbow, long, for cross arm Fig. G	35132-19
14	Plate, for cross arm Fig. G	36039-3
15	Screw, No. 14-24 x 5/8" fil. hd., for fastening terminal block to cross arm	12977-2
16	Pipe Plug, 1 1/4", for cross arms Fig. F and G	18524-5
17	Terminal Block Complete, includes terminal posts only	5971-19 Gr. 3
18	Nut, No. 14-24 x 5/16" hex., for terminal posts	42843-1
19	Washer, for terminal posts	1225-2
20	Connector, for terminal block	43587-6

PLATE H2928

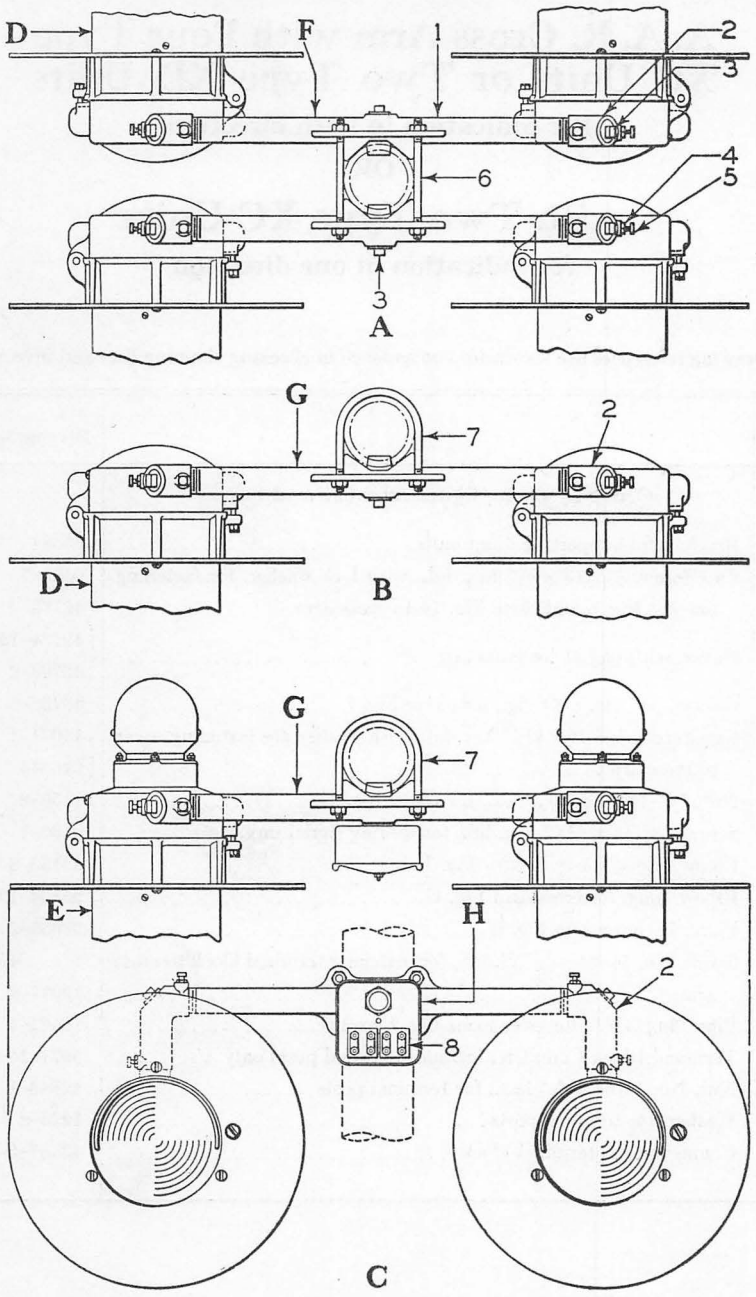

Cross Arms With Signal Unit

October 1946 GENERAL RAILWAY SIGNAL COMPANY

Cross Arm with Four Type XC Units or Two Type XD Units

For indication in both directions

OR

with Two Type XC Units

for indication in one direction

NOTE—For signals with A.A.R. type cross arms see Plate H2926.

Cross arms are arranged for mounting on masts of 3½" dia. pipe (4" outside dia.), 4" dia. pipe (4½" outside dia.) or 5" dia. pipe (5 9/16" outside dia.).

Cross arms listed below will be furnished with the following unless otherwise specified:

(a) Sidelights on signal units.
(b) Backgrounds on signal units.
(c) Cross arms and signal units painted black.

The following items must be specified when ordering:

(a) Type of roundel required. See Page 292 for description of glass combinations.
(b) Size of pipe on which cross arm is to be mounted.
(c) Voltage and wattage of lamps.
(d) For XD unit backlights, state whether 30 degree spredlite or 45 degree deflecting lenses are required.

For alternate or additional parts, specify:

(a) If Phankill units are required.
(b) If roundel and/or lens guards are required.

Drawing references are shown for convenience in checking shipping lists and invoices.

Fig. No.	Name	Drawing Reference
	Order by plate, figure number and name	
A	Cross Arms with four Type XC Signal Units Fig. D, as shown. For indication in both directions. **The information requested at the beginning of this plate must be furnished with order.**	
B	Cross Arm with two Type XC Signal Units Fig. D, as shown. For indication in one direction. **The information requested at the beginning of this plate must be furnished with order.**	

(*Continued on following page*)

GENERAL RAILWAY SIGNAL COMPANY October 1946

Cross Arm with Four Type XC Units or Two Type XD Units

For indication in both directions

OR

with Two Type XC Units

for indication in one direction

Drawing references are shown for convenience in checking shipping lists and invoices.

Fig. No.	Name	Drawing Reference
	Order by plate, figure number and name	
C	Cross Arm with two Type XD Signal Units Fig. E, as shown. For indication in both directions. **The information requested at the beginning of this plate must be furnished with order.**	
D	Type XC Color-light Signal Unit Complete. For details and order references see Plate H2937, Fig. A	55050–3
E	Type XD Color-light Signal Unit Complete. For details and order references see Plate H2937, Fig. B	55050–5
F	Two Cross Arms Complete, equipped with straight bolts Fig. 6 for supporting four signal units. Specify size of pipe on which cross arm is to be mounted	48870–9 Gr. 4
G	Cross Arm Complete, equipped with "U" bolts Fig. 7 for supporting two signal units. Specify size of pipe on which cross arm is to be mounted	48870–9 Gr. 3
H	Junction Box Complete, with four terminal blocks and nipple for attaching to cross arm	6226–20 Gr. 1
1	Cross Arm, only, for cross arms Figs. F and G	55215
2	Elbow Complete, long, with hex. nuts and pipe plug, for cross arms Figs. F and G	55445 Gr. 1
3	Pipe Plug, for elbows and cross arm	18524–5
4	Nut, $\frac{3}{8}$″-16 x $\frac{3}{16}$″ hex., for screw Fig. 5	35519
5	Set Screw, $\frac{3}{8}$″-16 x $\frac{7}{8}$″ sq. hd., for locking signal units to elbows	6894–2
6	Bolt, $\frac{1}{2}$″-13 x 7″ sq. hd., with hex. nut, for fastening cross arms to $3\frac{1}{2}$″ or 4″ pipe	015 072

(*Continued on following page*)

October 1946 GENERAL RAILWAY SIGNAL COMPANY

Cross Arm with Four Type XC Units or Two Type XD Units

For indication in both direction

OR

with Two Type XC Units

for indication in one direction

Drawing references are shown for convenience in checking shipping lists and invoices.

Fig. No.	Name	Drawing Reference
	Order by plate, figure number and name	
6a	as above, except for fastening cross arm to 5″ pipe	SK 5163 072
7	U Bolt Complete, ½″-13, with hex. nuts, for fastening cross arms to 3½″ or 4″ pipe	5183 Gr. 2
7a	as above, except for fastening cross arm to 5″ pipe	5183–2 Gr. 2
8	Terminal Block Complete, for junction box	46048–23 Gr. 8

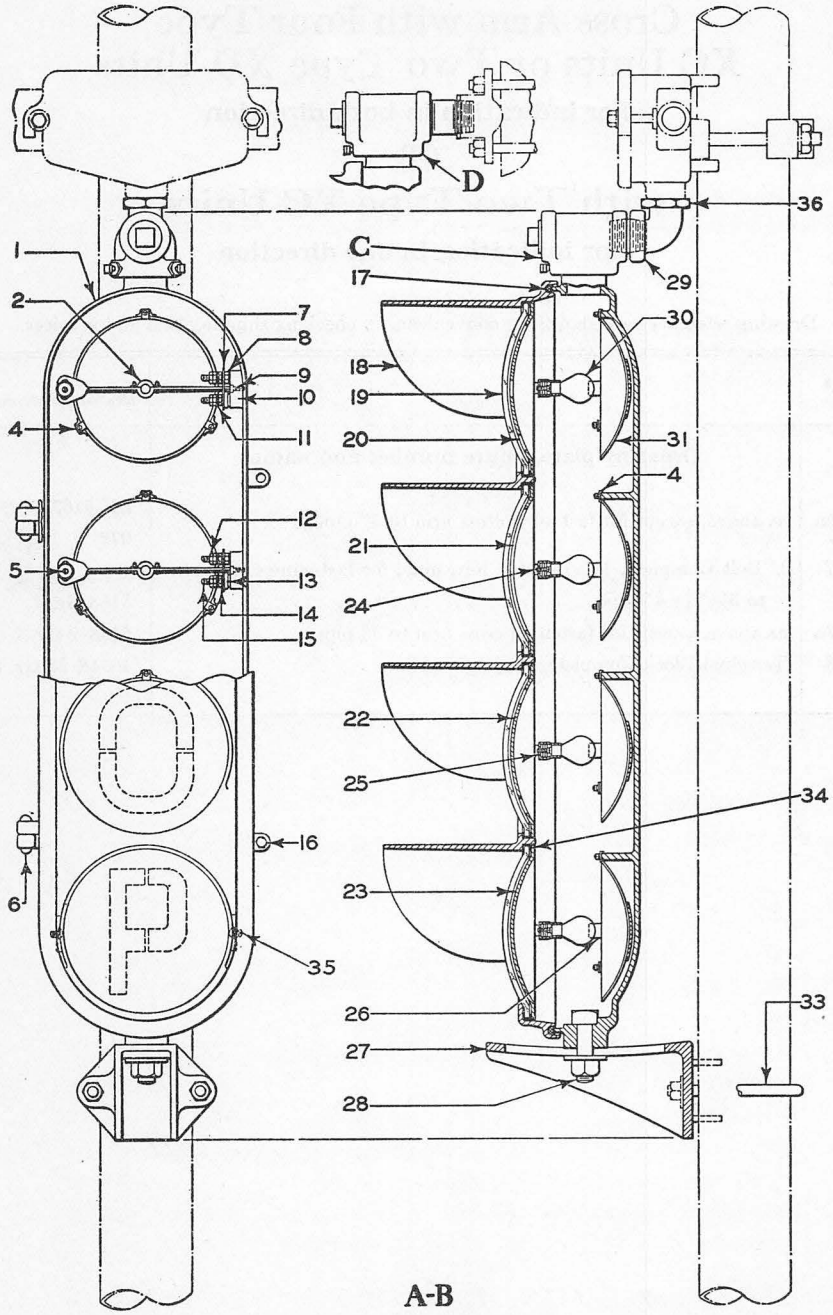

A-B

Illuminated Stop Sign

October 1946 GENERAL RAILWAY SIGNAL COMPANY

Illuminated Stop Sign

NOTE—Sign will be furnished with four 11.3 volt, 13.3 watt lamps, for service on 10 volts unless otherwise specified.

Sign will be painted black unless otherwise specified.

Drawing references are shown for convenience in checking shipping lists and invoices.

Fig. No.	Name	Drawing Reference
	Order by plate, figure number and name	
A	Illuminated Stop Sign Complete, as shown, with tee Fig. C, for use, with A.A.R. cross arm shown on Plate H2926. Includes bracket and U bolt for mounting. Specify size of pipe	55200 Gr. 2
B	Illuminated Stop Sign Complete, with tee Fig. D, for use with old type cross arm shown on Plate H2928	55200
C	Tee Complete with short nipple, for stop sign Fig. A. Does not include street ell Fig. 29	55094 Gr. 2
D	Tee Complete, with long nipple, for stop sign Fig. B	55094 Gr. 1
1	Case, only, for housing reflectors	55201
2	Receptacle Complete, with arm	53058–17 Gr. 2
4	Clip, for holding reflector in case, includes screw and washer for mounting	18547–25 2438–9 53029–7 55134
5	Eccentric Screw, with bushing, lock nut, washers and knurled nut, for mounting and adjusting receptable Fig. 2	51823 6347–18 493-85 846–1
6	Rivet, $\frac{3}{8}$″ x $1\frac{5}{8}$″, hinge pin for door	43509
7	Clip, for receptacle Fig. 2	55065–1
8	Nut, No. 14-24 x $\frac{3}{16}$″ hex., for terminal posts	42839–5
9	Screw, No. 10-32 x $\frac{1}{2}$″ fil. hd., for mounting block Fig. 10 to case	12563–1
10	Terminal Block, only, for sign	5971–7
11	Washer, for terminal posts	1225–2
12	Nut, No. 14-24 x $\frac{1}{8}$″ hex., for terminal posts	46989–2
13	Insulating Bushing, for terminal posts	7350–83
14	Insulating Washer, for terminal posts	493–62
15	Screw, No. 14-24 x $1\frac{1}{2}$″ sq. hd., used as terminal posts	350–3

(Continued on following page)

GENERAL RAILWAY SIGNAL COMPANY October 1946

Illuminated Stop Sign

Drawing references are shown for convenience in checking shipping lists and invoices.

Fig. No.	Name	Drawing Reference
	Order by plate, figure number and name	
16	Screw, 3/8″-16, for fastening cover to case	53141–1
17	Gasket, 7′ long, for cover	43786–2
18	Cover Complete, includes gasket for stop signs Figs. A and B	55203 Gr. 1
19	Roundel, red, for stop sign	53142–6
20	Stencil, letter "S," for stop sign	53667–2
21	Stencil, letter "T," for stop sign	53667–3
22	Stencil letter "O," for stop sign	53667–4
23	Stencil, letter "P," for stop sign	53667–5
24	Screw, No. 4-36 x 1/4″ fil. hd., with nut and lock washer, for spring Fig. 25	12526–1 12680–10 48526
25	Spring, with insulating washer, for receptacle	586–67 493–87
26	Spring, for reflectors	16111–44
27	Bracket, for supporting stop sign	55093
28	Bolt, 3/4″-10 x 2 1/2″ sq. hd., with hex. nut and washer, for fastening stop sign to bracket Fig. 27	0423 073
29	Street Ell, 1 1/4″, for fastening stop sign to A.A.R. cross arm	0775–10
30	Lamp, 11.3 volt, 13.3 watt, for service on 10 volts. If other lamps are required specify voltage of storage battery to be used with signal	34866–32
31	Reflector Complete, with washer, for stop sign	55343–1 Gr. 3
33	U Bolt Complete, 1/2″-13, with hex. nuts for fastening bracket to 3 1/2″ or 4″ pipe	5183 Gr. 2
33a	as above, except for 5″ pipe	5183–1 Gr. 2
34	Gasket, for roundel	13014–57
35	Screw, No. 10-32 x 3/8″ rd. hd., with lock washer, for fastening stencils to cover	2438–12 53029–7
36	Lock Nut, for street ell Fig. 29	27060

Memoranda

PLATE H2930

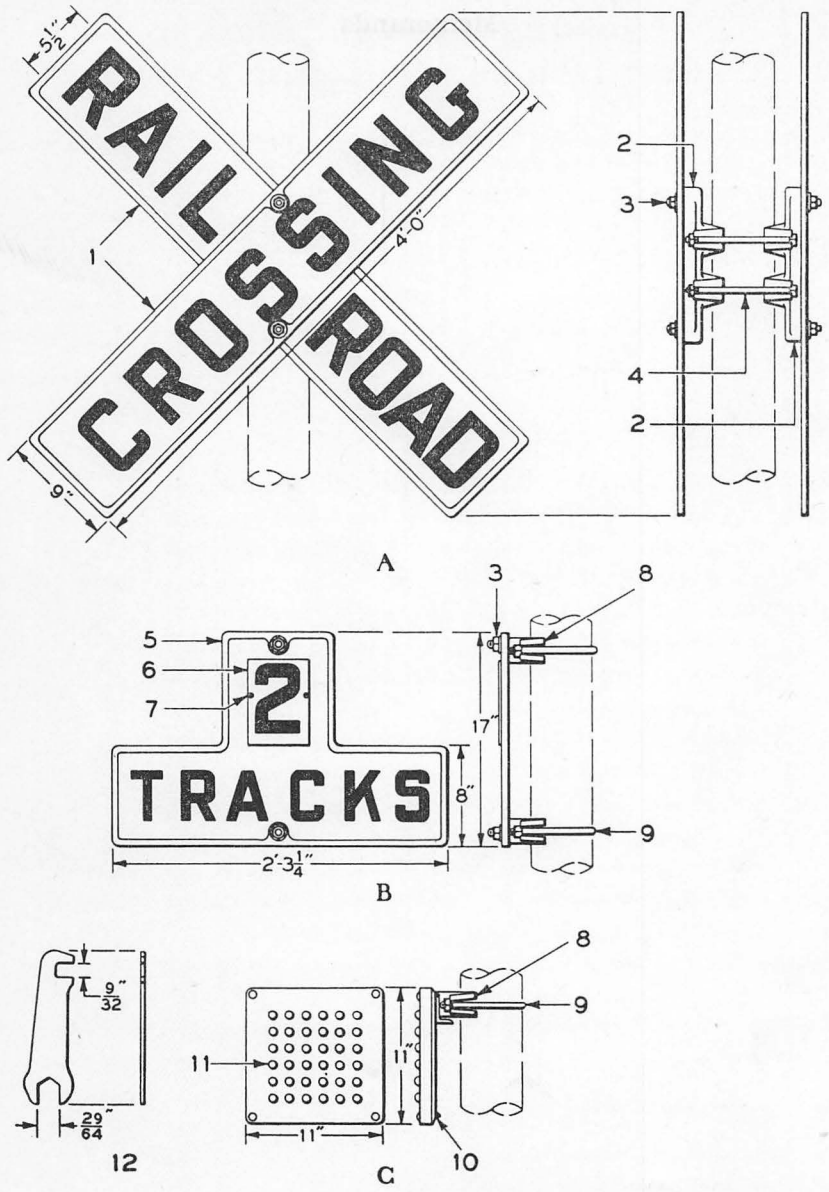

Crossing Signs and Marker

October 1946 GENERAL RAILWAY SIGNAL COMPANY

Crossing Signs and Marker Cast Iron and Reflector Types

NOTE—The painting of signs will be furnished as listed below which is A.A.R. standard unless otherwise specified. The backs of all signs except Fig. C are white.

All signs are arranged for mounting on masts of 3½″ dia. pipe (4″ outside dia.), 4″ dia. pipe (4½″ outside dia.), 5″ dia. pipe (5 9/16″ outside dia.), 6″ dia. pipe (6⅝″ outside dia.) or 8″ dia. pipe (8⅝″ outside dia.).

Drawing references are shown for convenience in checking shipping lists and invoices.

Fig. No.	Name	Drawing Reference
	Order by plate, figure number and name	
A	"Railroad Crossing" Sign Complete, A.A.R., cast iron. Has raised letters on both sides of sign which are painted black on a white background. Includes adapters and bolts for mounting. Specify size of pipe	55256–7 Gr. 1
B	"Tracks Sign" Complete, A.A.R., cast iron, has raised letters on one side of sign which are painted black on a white background. Includes adapters and "U" bolts for mounting. Specify size of pipe and numeral for sign	
C	Marker Complete, A.A.R., sheet steel, equipped with lemon yellow reflector buttons mounted on lemon yellow background. Face plate of sign finished with vitreous enamel, balance of sign synthetic enamel. For center-of-road installations. Includes adapters and "U" bolts for mounting. Specify size of pipe	55365–3
1	Crossing Sign only, cast iron. Has raised letters on both sides of sign	20896–36
2	Adapter Clamp, only, for mounting sign to pipe	55797
3	Bolt, ⅝″-11 x 2¼″ sq. hd., with hex. nut and washer, for fastening crossing signs to adapter	0127–1 2400–1
4	Bolt ½″-13 x 7″ sq. hd., with hex. nut, for fastening crossing sign to 4″ pipe	0592–4 988
4a	as above, except 8½″ lg., for 5″ pipe	0592–10 988
4b	same as Fig. 4 except for 6″ pipe	
4c	same as Fig. 4 except for 8″ pipe	
4d	same as Fig. 4 except for 3½″ pipe	0592–9 988

(Continued on following page)

GENERAL RAILWAY SIGNAL COMPANY October 1946

Crossing Signs and Marker Cast Iron and Reflector Types

Drawing references are shown for convenience in checking shipping lists and invoices.

Fig. No.	Name	Drawing Reference
	Order by plate, figure number and name	
5	Tracks Sign, only, has raised letters on one side of sign	
6	Numeral Sign, only, for "Tracks" sign. Specify numeral required	
7	Screw, theft resisting, for fastening numeral to sign	
8	Adapter Clamp, only, for mounting signs Figs. B and C to pipe	35378–12
9	U Bolt, ½″-13, with hex. nuts and washers, for fastening signs Figs. B and C to 4″ pipe	20476–4 1048 988
9a	as above, except for 5″ pipe	20476–40 1048 988
9b	same as Fig. 9, except for 6″ pipe	20476–39 1048 988
9c	same as Fig. 9, except for 8″ pipe	20476–41 1048 988
9d	same as Fig. 9, except for 3½″ pipe	20476–3 1048 988
10	Spanner Nut, theft resisting, for marker sign	846–16
11	Reflector Button, lemon yellow, ¾″, for marker	55257–14
12	Wrench, for nut Fig. 10	36593–9

Memoranda

PLATE H2932

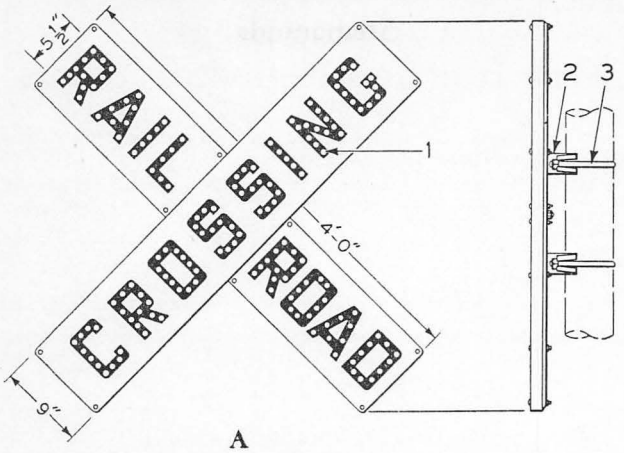

A

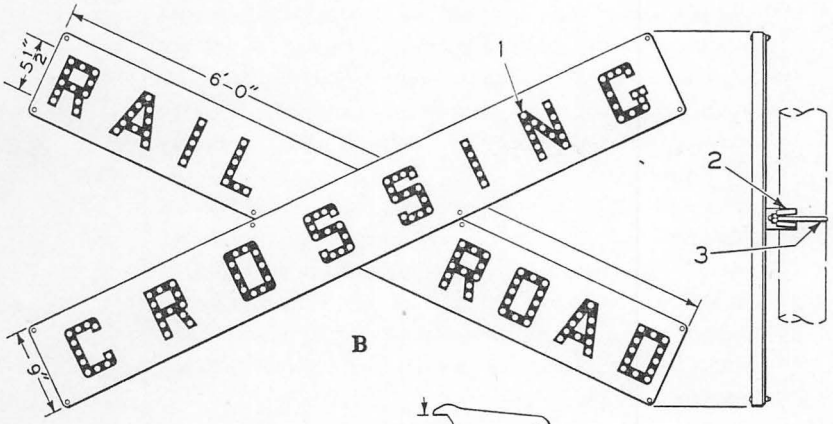

B

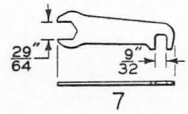

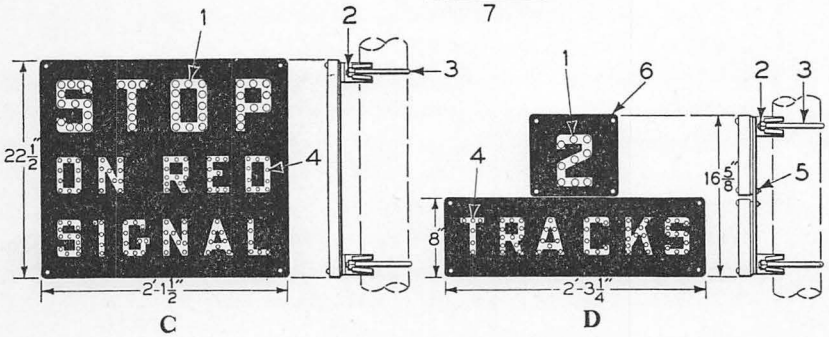

C D

Crossing Signs

Crossing Signs
Cast Iron and Reflector Types

NOTE—The painting of signs will be furnished as listed below which is A.A.R. standard, unless otherwise specified. The back of all signs are white.

All signs are arranged for mounting on masts of 3½″ dia. pipe (4″ outside dia.), 4″ dia. pipe (4½″ outside dia.), 5″ dia. pipe (5 9/16″ outside dia.), 6″ dia. pipe (6⅝″ outside dia.) or 8″ dia. pipe (8⅝″ outside dia.).

Drawing references are shown for convenience in checking shipping lists and invoices.

Fig. No.	Name	Drawing Reference
	Order by plate, figure number and name	
A	"Railroad Crossing" Sign Complete, A.A.R., sheet steel, equipped with glass reflector buttons mounted on flat letters, on one side only, which are painted black on a white background. Face plate of sign finished with vitreous enamel, balance of sign synthetic enamel. Includes adapters and "U" bolts for mounting. Specify size of pipe	55256–16 Gr. 4
A1	as above, except entire front of sign finished with synthetic enamel.	
B	"Railroad Crossing" Sign Complete, 50 degree. A.A.R., sheet steel, equipped with glass reflector buttons mounted on flat letters, on one side only, which are painted black on a white background. Face plate of sign finished with vitreous enamel, balance of sign synthetic enamel. Includes adapters and "U" bolts for mounting. Specify size of pipe	55256-22 Gr. 4
B1	as above, except entire front of sign finished with synthetic enamel.	55256–22
C	"Stop on Red Signal" Sign Complete. A.A.R., sheet steel, equipped with glass reflector buttons mounted on flat letters which are painted white on a black background. Face plate of sign finished with vitreous enamel, balance of sign synthetic enamel. Includes adapters and "U" bolts for mounting. Specify size of pipe	55256–14 Gr. 1
C1	as above, except entire front of sign finished with synthetic enamel.	55256–14 Gr. 3
D	"Tracks" Sign Complete. A.A.R., sheet steel, equipped with glass reflector buttons mounted on flat letters which are painted white on a black background. Face plate of sign finished with vitreous enamel, balance of sign synthetic enamel. Includes adapters and "U" bolts for mounting. Specify size of pipe and numeral for sign.	55256–13

(Continued on following page)

GENERAL RAILWAY SIGNAL COMPANY October 1946

Crossing Signs
Cast Iron and Reflector Types

Drawing references are shown for convenience in checking shipping lists and invoices.

Fig. No.	Name	Drawing Reference
	Order by plate, figure number and name	
D1	as above, except entire front of sign finished with synthetic enamel.	55256–13
1	Reflector Button, clear, for crossing signs Figs. A and B, letters STOP of Stop on Red Signal Sign and Numerals on Track Sign..	55257–11
2	Adapter Clamp, for mounting signs Figs. A, B, C, and D.....	35378–12
3	U Bolt, ½″-13, with hex. nuts and washers, for mounting signs Figs. A, B, C, D to 3″ pipe.....	20476–3 1048 988
3a	as above, except for 4″ pipe.....	20476–4 1048 988
3b	same as Fig. 3, except for 5″ pipe.....	20476–40 1048 988
3c	same as Fig. 3, except for 6″ pipe.....	20476–39 1048 988
3d	same as Fig. 3, except for 8″ pipe.....	20476–41 1048 988
4	Reflector Button, clear, for letters "On Red Signal and Tracks"...	55257–12
5	Spanner Nut, theft resisting, for signs.....	846–16
6	Face Plate, with reflector buttons and numeral, sheet steel, finished with vitreous enamel, specify numeral required.....	
6a	as above, except finished with synthetic enamel.....	
7	Wrench, for nut Fig. 5.....	36593–9

Memoranda

PLATE H2934

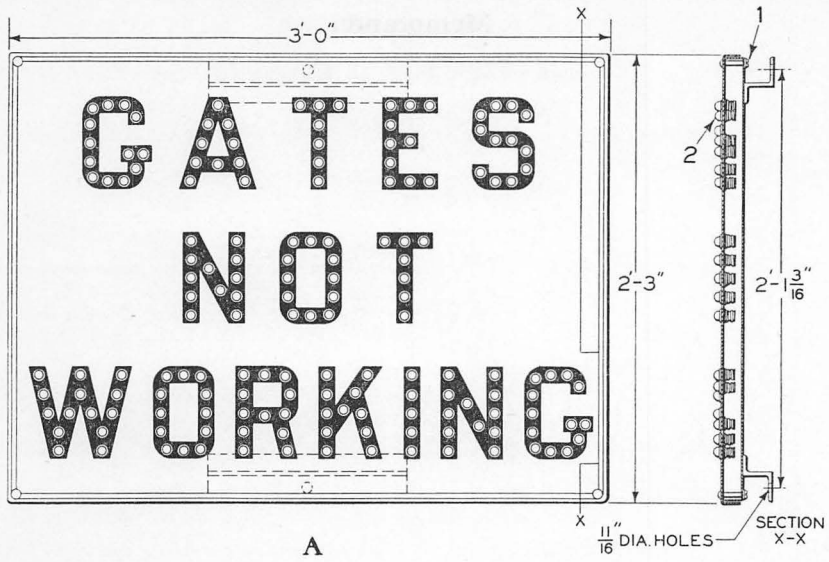

A

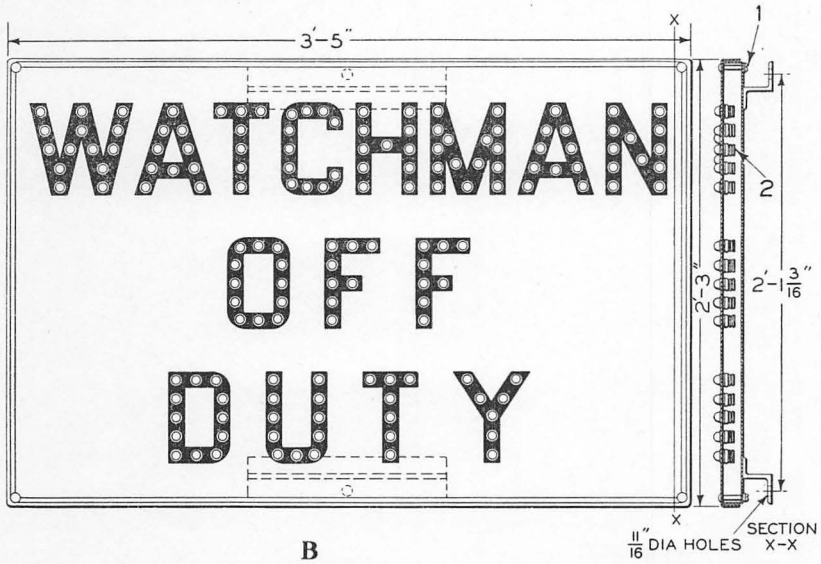

B

Crossing Signs

October 1946 GENERAL RAILWAY SIGNAL COMPANY

Crossing Signs
Reflector Type

NOTE—The painting of signs will be furnished as listed below which is A.A.R. standard unless otherwise specified.

Drawing references are shown for convenience in checking shipping lists and invoices.

Fig. No.	Name	Drawing Reference
	Order by plate, figure number and name	
A	"Gates Not Working" Sign Complete, A.A.R., sheet steel, equipped with glass reflector buttons mounted on flat letters, on one side only, which are painted black on a white vitreous enamel background	55256–17 Gr. 1
A1	Cover Complete, for sign Fig. A, for use when sign is to be covered	52318–34 Gr. 1
B	"Watchman Off Duty" Sign Complete, A.A.R., sheet steel, equipped with glass reflector buttons mounted on flat letters, on one side only, which are painted black on a white vitreous enamel background	55256–18 Gr. 1
B1	Cover Complete, for sign Fig. B, for use when sign is to be covered	52318–34 Gr. 2
1	Spanner Nut, theft resisting, for signs	846–16
2	Reflector Button, clear, for signs	55257–11

PLATE H2935

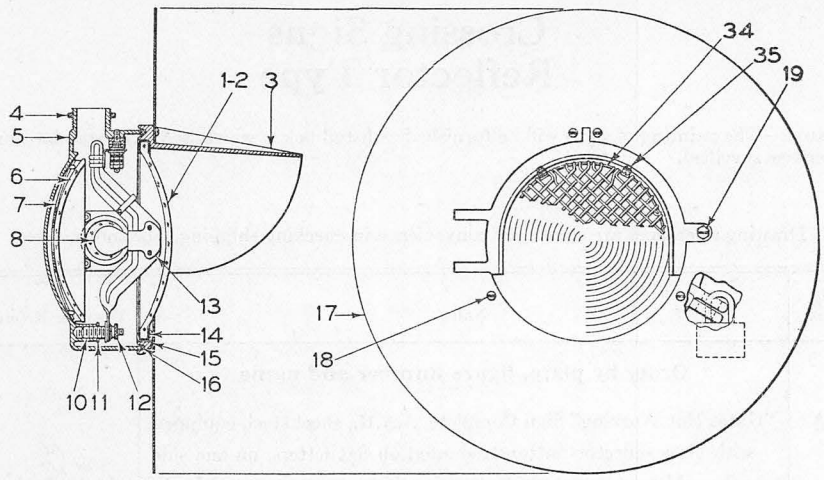

A-Type XA Signal Unit

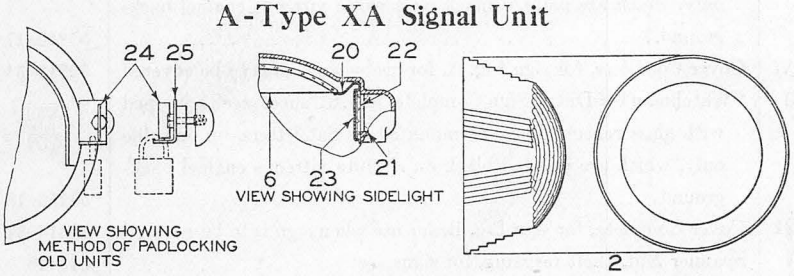

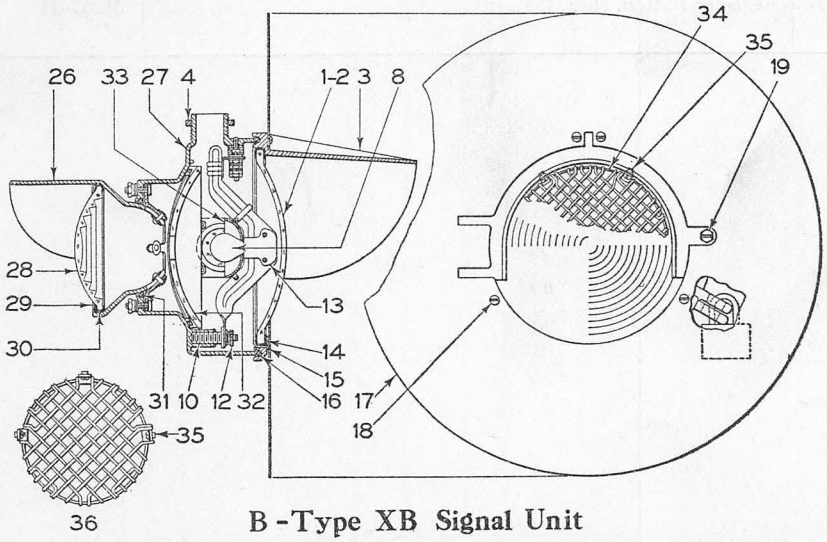

B-Type XB Signal Unit

Types XA and XB Color-light Signal Units

October 1946 GENERAL RAILWAY SIGNAL COMPANY

Types XA and XB Color-light Signal Units

For Ordering Replacement Parts Only

NOTE—Signal Units listed below will be equipped with sidelights and 11.3 volt, 13.3 watt lamp, for service on 10 volts, unless otherwise specified.

Signal Unit and background will be painted black unless otherwise specified.

Signal Units are listed below with 30 degree and 160 degree front spredlite roundel, however, other roundel combinations will be furnished when specified.

For description of glass combinations, see general information Pages 291 and 292 preceding Plate H2916.

Drawing references are shown for convenience in checking shipping lists and invoices.

Fig. No.	Name	Drawing Reference
	Order by plate, figure number and name	
A	Type XA Color-light Signal Unit Complete, as shown, with background. Equipped with 8⅜" dia., red, front 30 degree spredlite roundel	55050–1 Gr. 5
A1	as above, except without background	55050–1 Gr. 5
A2	same as Fig. A, except equipped with 8⅜" dia., red, front 160 degree spredlite roundel, Fig. 2	55050–1 Gr. 9
A3	same as Fig. A2, except without background	55050–1 Gr. 9
B	Type XB Color-light Signal Unit Complete, as shown with background and backlight. Equipped with 8⅜" dia., red, front 30 degree spredlite roundel and 5⅜" dia., red, back 30 degree spredlite lens	55050 Gr. 7
B1	as above, except without background	55050 Gr. 7
B2	same as Fig. B, except equipped with 8⅜" dia., red, front 30 degree spredlite roundel and 5⅜" dia., red, back 45 degree deflecting lens	55050 Gr. 9
B3	same as Fig. B2, except without background	55050 Gr. 9
B4	same as Fig. B, except equipped with 8⅜" dia., red, front 160 degree spredlite roundel and 5⅜" dia., red, back 30 degree spredlite lens	55050 Gr. 13
B5	same as Fig. B4, except without background	55050 Gr. 13
B6	same as Fig. B, except equipped with 8⅜" dia., red, front 160 degree spredlite roundel and 5⅜" dia., red, back 45 degree deflecting lens	55050 Gr. 15

(*Continued on following page*)

GENERAL RAILWAY SIGNAL COMPANY October 1946

Types XA and XB Color-light Signal Units

For Ordering Replacement Parts Only

Drawing references are shown for convenience in checking shipping lists and invoices.

Fig. No.	Name	Drawing Reference
	Order by plate, figure number and name	
B7	same as Fig. B6, except without background	55050 Gr. 15
1	Roundel, red, as shown, has 30 degree spread	53142–6
1a	as above, except with gasket	54194 Gr. 6
2	Roundel, red, as shown, has 160 degree spread with 12 degree downward deflection	53142–3
2a	as above, except with gasket	54194–4 Gr. 1
3	Hood, for signal units with or without backgrounds	55052–3
3a	as above, except with holes for mounting guard, Fig. 34	55052–5
4	Lock Nut, for fastening signal unit to cross arm on Plate H2928	27060
5	Case, only, for signal unit Fig. A	55051–1
6	Reflector Complete, with washer, for signal unit Fig. A	55343–1 Gr. 1
7	Spring, for holding reflector in place	16111–29
8	Lamp, 11.3 volt, 13.3 watt, for service on 10 volts. If other lamps are required specify voltage of storage battery to be used with signal	34866–32
10	Eccentric Screw, for adjusting vertical position of lamp	55134
11	Lock Nut, for eccentric screw	51823
12	Knurled Nut, No. 14-24, for screw Fig. 10	846–1
13	Receptacle Complete, with arm, for unit with 30 degree roundel	53058–17 Gr. 1
13a	as above, except for unit with 160 degree roundel	53058–17 Gr. 2
14	Gasket, for roundels Figs. 1 and 2	13014–57
15	Clip, for holding roundel to hood	18547–44
16	Gasket, for use between case and hood	47562
17	Background, 20″ dia., for signal units	49162–70
18	Screw, $\frac{1}{4}$″-20 x $\frac{5}{16}$″ rd. hd., includes washer, for fastening background to hood	3955–19 0510–1
19	Screw, $\frac{3}{8}$″-16, for fastening hood to case	53141–1
20	Retainer, for holding reflectors in place, also for holding sidelight glass Fig. 22 in place	55133

(*Continued on following page*)

October 1946

GENERAL RAILWAY SIGNAL COMPANY

Types XA and XB Color-light Signal Units

For Ordering Replacement Parts Only

Drawing references are shown for convenience in checking shipping lists and invoices.

Fig. No.	Name	Drawing Reference
	Order by plate, figure number and name	
21	Screw, No. 10-32 x 3/8" rd. hd., includes nut, for fastening retainer Fig. 20 to case	2438–12 577–2
22	Sidelight Glass, for signal unit	924–3
22a	Disc, for use when sidelights are not used	39719–21
23	Ring, for holding glass Fig. 22 in place	43712–4
24	Wing Screw, 3/8"-16, for use with plate Fig. 25, for locking signal unit not equipped with lugs for padlock	55996 Gr. 1
25	Plate, for locking signal unit, used with wing screw Fig. 24	305–238
26	Hood, for backlight, includes screw and nut, for fastening lens Fig. 28 and ring Fig. 29	55052–1 12280–3 31784–1
26a	as above, except with holes for mounting guard Fig. 36	55052–6 12280–3 31784–1
27	Case, only, for signal unit Fig. B	55051
28	Lens, red, has 30 degree spread	45699–1
28a	as above, except has 45 degrees deflection	45699–2
29	Ring, for holding lens Fig. 28 in signal unit	43712–3
30	Gasket, for lens Fig. 28	13014–74
31	Gasket, for use between case and backlight hood	47562
32	Reflector Complete, with washer for signal unit Fig. B	55343–1 Gr. 2
33	Reflector Complete, for backlights	55130 Gr. 1
34	Roundel Guard, steel wire, for signal units	38040–2 Gr. 2
35	Screw, No. 10-32 x 5/16" rd. hd., with lock washer, for mounting guards Figs. 34 and 36	3044–3
36	Lens Guard, steel wire, for backlights	

...TE H2935

October 1946

RAILWAY SIGNAL COMPANY

GENERAL

PLATE H2937

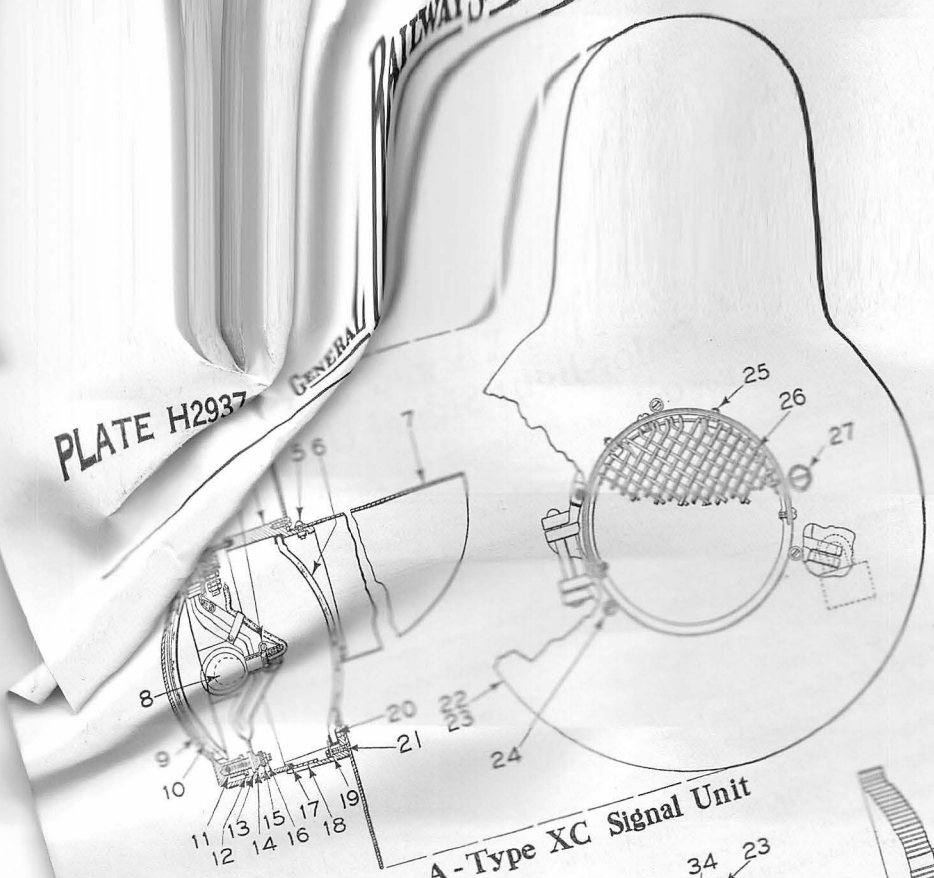

A-Type XC Signal Unit

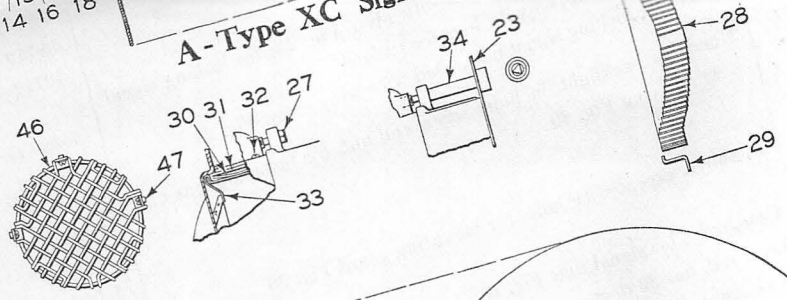

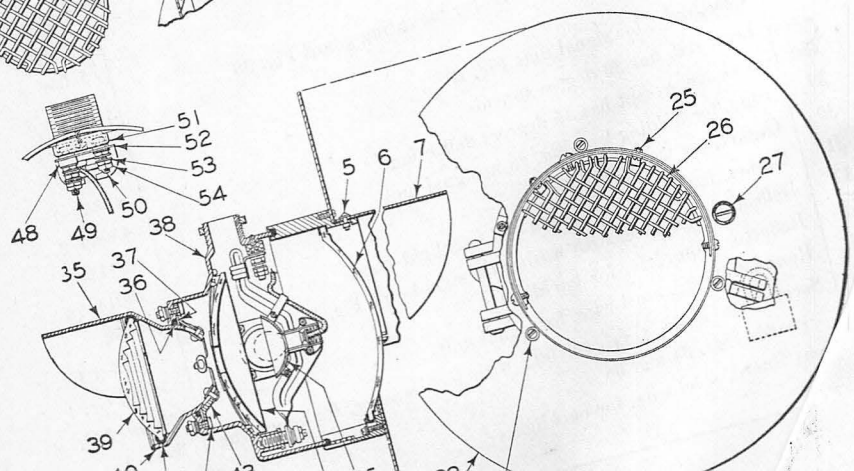

October 1946 GENERAL RAILWAY SIGNAL COMPANY

Types XC and XD Color-light Signal Units

Signal units will be furnished with the following unless otherwise specified:

(a) Sidelights on signal units.
(b) Backgrounds on signal units.
(c) Signal units painted black.

The following items must be specified when ordering:

(a) Type of roundel required. See Page 292 for description of glass combinations.
(b) Voltage and wattage of lamps.
(c) For XD signal unit backlights state whether 30 degree spredlite or 45 degree deflecting lenses are required.

For alternate or additional parts, specify:

(a) If Phankill units are required.
(b) If roundel and/or lens guards are required.

Drawing references are shown for convenience in checking shipping lists and invoices.

Fig. No.	Name	Drawing Reference
	Order by plate, figure number and name	
A	Type XC Color-light Signal Unit Complete, with sidelights and background. Does not include roundel guard. **The information requested at the beginning of this plate must be furnished with order**	55050–3
A1	as above, except with Phankill Unit Fig. 28	55050–3
B	Type XD Color-light Signal Unit Complete, with sidelights and background. Does not include roundel or lens guards. **The information requested at the beginning of this plate must be furnished with order.**	55050–5
B1	as above, except with Phankill Unit Fig. 28	55050–5
1	Case, only, for signal unit Fig. A	55051–1
2	Lock Nut, 1¼″ pipe thread, for locking unit to cross arm shown on Plate H2928	27060
3	Receptacle Complete with arm, for lamp	53058–17 Gr. 2
4	Ring, for signal unit	43983–69
5	Screw, No. 10-32 x ⅜″ rd. hd., with sq. nut and lock washer, for fastening hood to ring Fig. 4	2438–12 29536–1 53029–7
6	Roundel, red, 8⅜″ dia., has 30 degree spread	53142–6

(*Continued on following page*)

GENERAL RAILWAY SIGNAL COMPANY October 1946

Types XC and XD Color-light Signal Units

Drawing references are shown for convenience in checking shipping lists and invoices.

Fig. No.	Name	Drawing Reference
	Order by plate, figure number and name	
6a	as above, except with gasket	54194 Gr. 6
6b	same as Fig. 6 except has 30 degree spread with 15 degrees downward deflection	53142–11
6c	same as Fig. 6b except with gasket	54194 Gr. 12
6d	same as Fig. 6 except has 20 degree spread with 32 degrees downward deflection	53142–13
6e	same as Fig. 6d except with gasket	54194 Gr. 13
6f	same as Fig. 6 except 20 degree deflecting roundel	9238–38
6g	same as Fig. 6f except with gasket	54194 Gr. 1
6h	same as Fig. 6 except has 70 degree spread	53142–9
6j	same as Fig. 6h except with gasket	54194 Gr. 7
6k	same as Fig. 6 except has 160 degree spread with 12 degrees downward deflection	53142–3
6m	same as Fig. 6k except with gasket	54194–4 Gr. 1
7	Hood, for signal units	49127–54
7a	as above, except with holes for mounting roundel guard	49127–59
8	Lamp, specify voltage and wattage and also volts upon which lamps will operate	
9	Spring, for reflector	16111–29
10	Reflector Complete, with washer, for signal unit Fig. A	55343–1 Gr. 1
11	Eccentric Screw, for receptacle	55134
12	Lock Nut, for eccentric screw Fig. 11	51823
13	Bushing, for receptacle arm	6347–18
14	Insulating Washer, for receptacle arm	493–85
15	Knurled Nut, No. 14-24 for eccentric screw Fig. 11	846–1
16	Nut, No. 14-24 x ⅛″ tk., hex., for locking nut Fig. 15	46989–2
17	Gasket, for case	47562
18	Screen, for bottom of ring	5748–52
19	Spring Clip, for roundel	1228–11
20	Gasket, for roundel	13014–57

(Continued on following page)

October 1946 GENERAL RAILWAY SIGNAL COMPANY

Types XC and XD Color-light Signal Units

Drawing references are shown for convenience in checking shipping lists and invoices.

Fig. No.	Name	Drawing Reference
	Order by plate, figure number and name	
21	Screw, No. 10-32 x 7/8" fil. hd., with washer, for clip Fig. 19	12563-9 5046-6
22	Background, for signal units	49162-79
23	Background, for use with special triangular head bolt Fig. 34	49163-32 Gr. 1
24	Screw, 1/4"-20 x 5/16" rd. hd., with washer, for fastening background to signal units	3955-19 0510-1
25	Screw, No. 10-32 x 5/16" rd. hd., with hex. nut and lock washer, for mounting roundel guard	3044-3 38239-1 53029-7
26	Roundel Guard, steel wire, for signal units	38040-2 Gr. 9
27	Screw, 3/8"-16, hex. hd., slotted, for fastening ring to case	53141-1
28	Phankill Unit, for signal units	56629
29	Clip, for holding Phankill unit	18547-62
30	Ring, for glass Fig. 31	43712-4
31	Glass, for sidelights	924-3
31a	Disc, for use when sidelights are not used	39719-21
32	Screw, No. 10-32 x 3/8" rd. hd., with hex. nut, for ring Fig. 30	2438-12 577-2
33	Retainer, for reflector and sidelight glass	55133
34	Screw, special triangular head, for fastening ring to case	21687-10
35	Hood, for backlight, includes screw and nut, for fastening lens Fig. 39 and ring Fig. 40	55052-1 12280-3 31784-1 55052-6
35a	as above, except with holes for mounting guard Fig. 46	12280-3 31784-1
36	Gasket, for use between case and backlight hood	47562
37	Ring, for backlight	43712-5
38	Case, for signal unit Fig. B	55051
39	Lens, red, 5 3/8" dia., has 30 degree spread	45699-1

(Continued on following page)

GENERAL RAILWAY SIGNAL COMPANY October 1946

Types XC and XD Color-light Signal Units

Drawing references are shown for convenience in checking shipping lists and invoices.

Fig. No.	Name	Drawing Reference
	Order by plate, figure number and name	
39a	as above, except has 45 degree deflection	45699–2
40	Ring, for lens Fig. 39	43712–3
41	Gasket, for lens Fig. 39	13014–74
42	Screw, No. 14-24 x 7/8″ sq. hd., with hex. nut, for fastening retainer to case	3034–7 42843–1
43	Retainer Complete, for backlight	55132 Gr. 1
44	Reflector Complete, with washer, for signal unit Fig. B	55343–1 Gr. 2
45	Reflector Complete, for backlight	55130 Gr. 1
46	Lens Guard, steel wire, for backlights	38040–11 Gr. 2
47	Screw, No. 10-32 x 5/16″ rd. hd., with lock washer, for mounting lens guard Fig. 46	3044–3 53029–7
48	Bushing, for terminal post	7350–83
49	Screw, No. 14-24 x 1″ sq. hd., used as terminal post	350
50	Screw, No. 14-24 x 1 1/2″ sq. hd., used as terminal post	350–3
51	Terminal Block, only	5971–7
52	Clip, for wires	55065–1
53	Washer, for terminal posts	1225–2
54	Nut, No. 14-24 x 1/8″ tk. hex., for terminal posts	46989–2

Memoranda

PLATE H2939

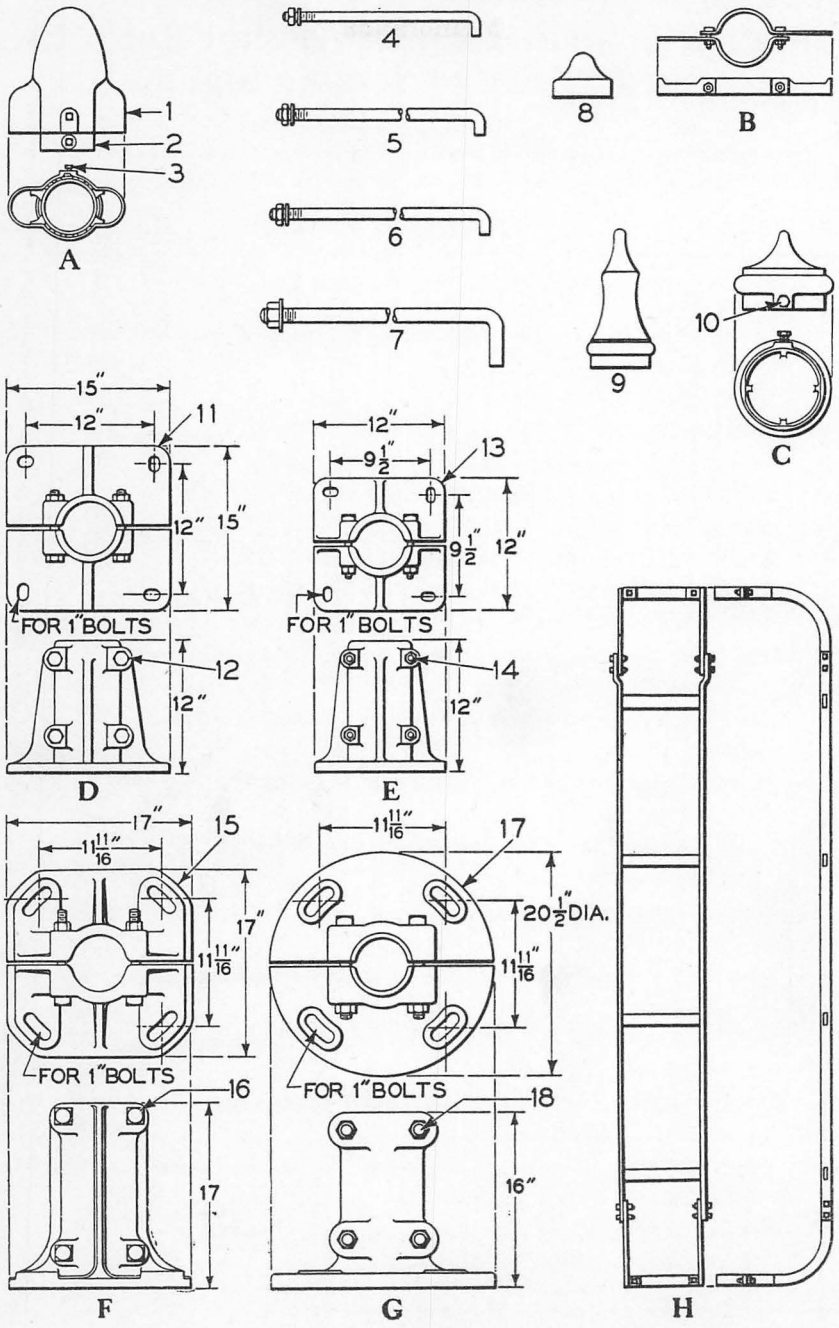

Bases, Pinnacles, Ladder, Anchor Bolts, Etc.

October 1946 GENERAL RAILWAY SIGNAL COMPANY

Bases, Pinnacles, Ladder, Anchor Bolts, Etc. for Highway Crossing Signals

Drawing references are shown for convenience in checking shipping lists and invoices.

Fig. No.	Name	Drawing Reference
	Order by plate, figure number and name	
A	Pinnacle and Cap, for use as wire inlet, for 4″ pipe. (4½″ outside dia.)	30391 36288–2
B	Step Complete, as shown, for 4″ pipe (4½″ outside dia.)	20416–3 Gr. 1
B1	as above, except for 5″ pipe (5 9/16″ outside dia.)	20416–6 Gr. 1
B2	same as Fig. B, except for 6″ pipe (6⅝″ outside dia.)	20416–6 Gr. 2
C	Pinnacle Complete, for 6″ pipe (6⅝″ outside dia.)	56894 Gr. 4
C1	as above, except for 8″ pipe (8⅝″ outside dia.)	56894 Gr. 7
C2	same as Fig. C, except for 5″ pipe (5 9/16″ outside dia.)	56894 Gr. 2
D	Base Complete, includes bolts and nuts for attaching to 4″ pipe (4½″ outside dia.)	43951–5 Gr. 1
E	Base Complete, includes bolts and nuts for attaching to 4″ pipe (4½″ outside dia.)	43951–4 Gr. 2
F	Base Complete, includes bolts and nuts for attaching to 5″ pipe (5 9/16″ outside dia.)	43951–17 Gr. 1
G	Base Complete, includes bolts and nuts for attaching to 5″ pipe (5 9/16″ outside dia.)	43951–10 Gr. 1
H	Ladder Complete, with clamps for attaching to pipe. Specify length of ladder and dia. of pipe	307–6
1	Pinnacle, only, for use with cap Fig. 2	30391
2	Cap, for pinnacle Fig. 1	36288–2
3	Set Screw, ½″-13, for fastening cap to pipe, also for fastening pinnacle to cap	0210
4	Bolt, ¾″-10 x 18″ lg., with sq. nut and washer, for fastening base to foundation	36182 073
5	Bolt, 1″-8 x 2′ lg., with hex. nut and washer, for fastening relay case or base to foundation	10270–1 Gr. 1 074
6	Bolt, 1″-8 x 3′ lg., with hex. nut and washer, for fastening base to foundation	22172 Gr. 4 074
7	Bolt, 1¼″-7 x 3′6″ lg., with hex. nut and washer, for fastening pole and base to foundation	22349–1 0381–1

(Continued on following page)

GENERAL RAILWAY SIGNAL COMPANY October 1946

Bases, Pinnacles, Ladder, Anchor Bolts, Etc. for Highway Crossing Signals

Drawing references are shown for convenience in checking shipping lists and invoices.

Fig. No.	Name	Drawing Reference
	Order by plate, figure number and name	
8	Pinnacle, only, for 4″ pipe (4½″ outside dia.)	43957–2
9	Pinnacle, only, for 4″ pipe (4½″ outside dia.)	1661
10	Bolt, ½″-13 x 1½″ hex. hd., with sq. nut, for pinnacle Fig. C	0551 41739–2
11	Half Base, for base Fig. D	43953–7
12	Bolt, ¾″-10 x 6″ sq. hd., with hex. nut for clamping base to pipe	0710
13	Half Base, for base Fig. E	43953–12
14	Bolt, ¾″-10 x 5½″ sq. hd., with hex. nut, for clamping base to pipe	0412–2
15	Half Base, for base Fig. F	43953–20
16	Bolt, 1″-8 x 7½″ lg., sq. hd., with hex. nut, for clamping base to pipe	46460–12 Gr. 1
17	Half Base, for base Fig. G	43953–13
18	Bolt, 1″-8 x 8½″ lg., sq. hd., with hex. nut, for clamping base to pipe	26565–3

Memoranda

PLATE H2941

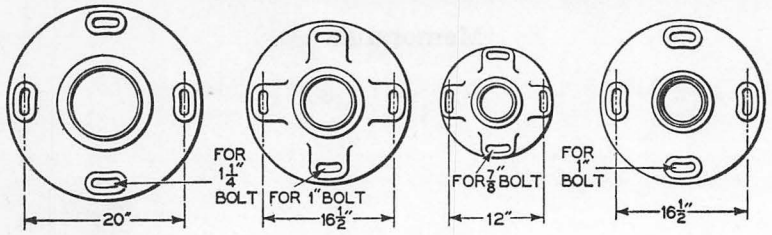

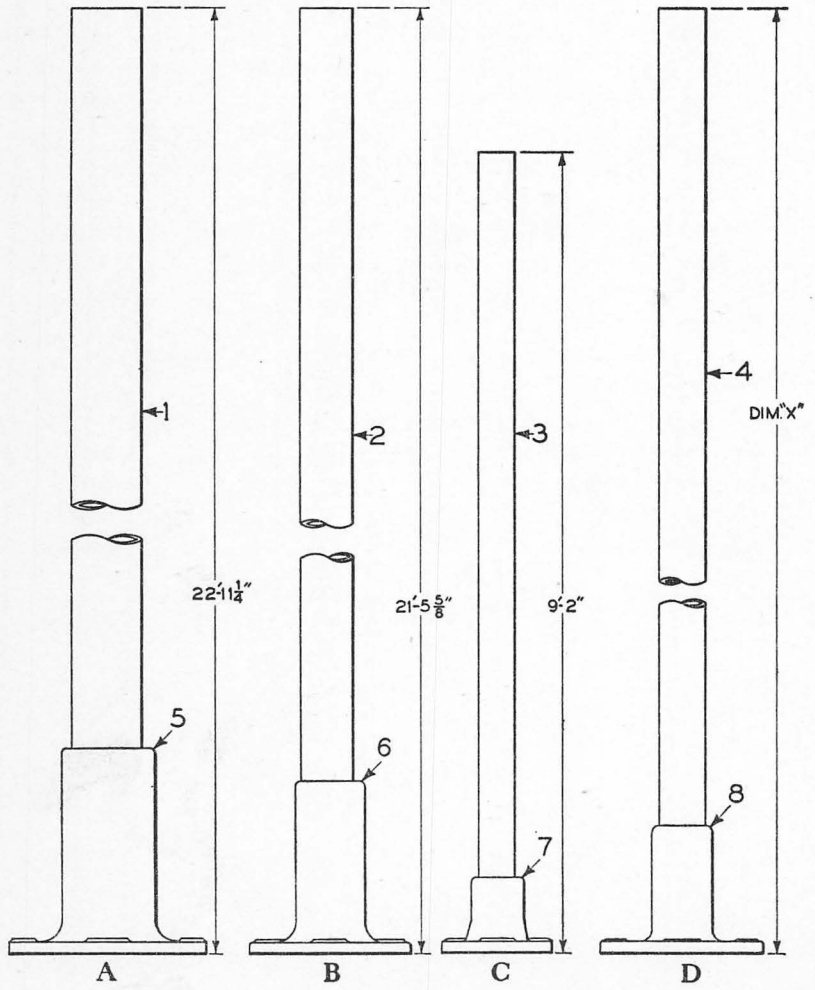

Poles and Bases

October 1946 GENERAL RAILWAY SIGNAL COMPANY

Poles and Bases for Highway Crossing Signals

Drawing references are shown for convenience in checking shipping lists and invoices.

Fig. No.	Name	Drawing Reference
	Order by plate, figure number and name	
A	Pole and Base Complete, 8″ pipe (8⅝″ outside dia.) 22′11¼″ long. For signal shown on Plate H2922, Fig. B	48848–29 Gr. 1
B	Pole and Base Complete, 6″ pipe (6⅝″ outside dia.) 21′5⅝″ long. For signal shown on Plate H2922, Fig. A	48848–26 Gr. 2
C	Pole and Base Complete, 4″ pipe (4½″ outside dia.). For use when signal is mounted on relay case. Other lengths will be furnished when specified	45935–4
D	Pole and Base Complete, 5″ pipe ($5\frac{9}{16}$″ outside dia.). Specify Dimension "X"	48848–9
1	Pipe, only, 8″ (8⅝″ outside dia.) 22′9″ long	
2	Pipe, only, 6″ (6⅝″ outside dia.) 21′3″ long	
3	Pipe, 4″ (4½″outside dia.) 9′2″ long. Other lengths will be furnished when specified	
4	Pipe, 5″ ($5\frac{9}{16}$″ outside dia.) Dimension "X" as specified	
5	Base, only, for 8″ pipe	15696
6	Base, only, for 6″ pipe	21211
7	Base, only, for 4″ pipe	36095
8	Base, only, for 5″ pipe	38934

PLATE H2943

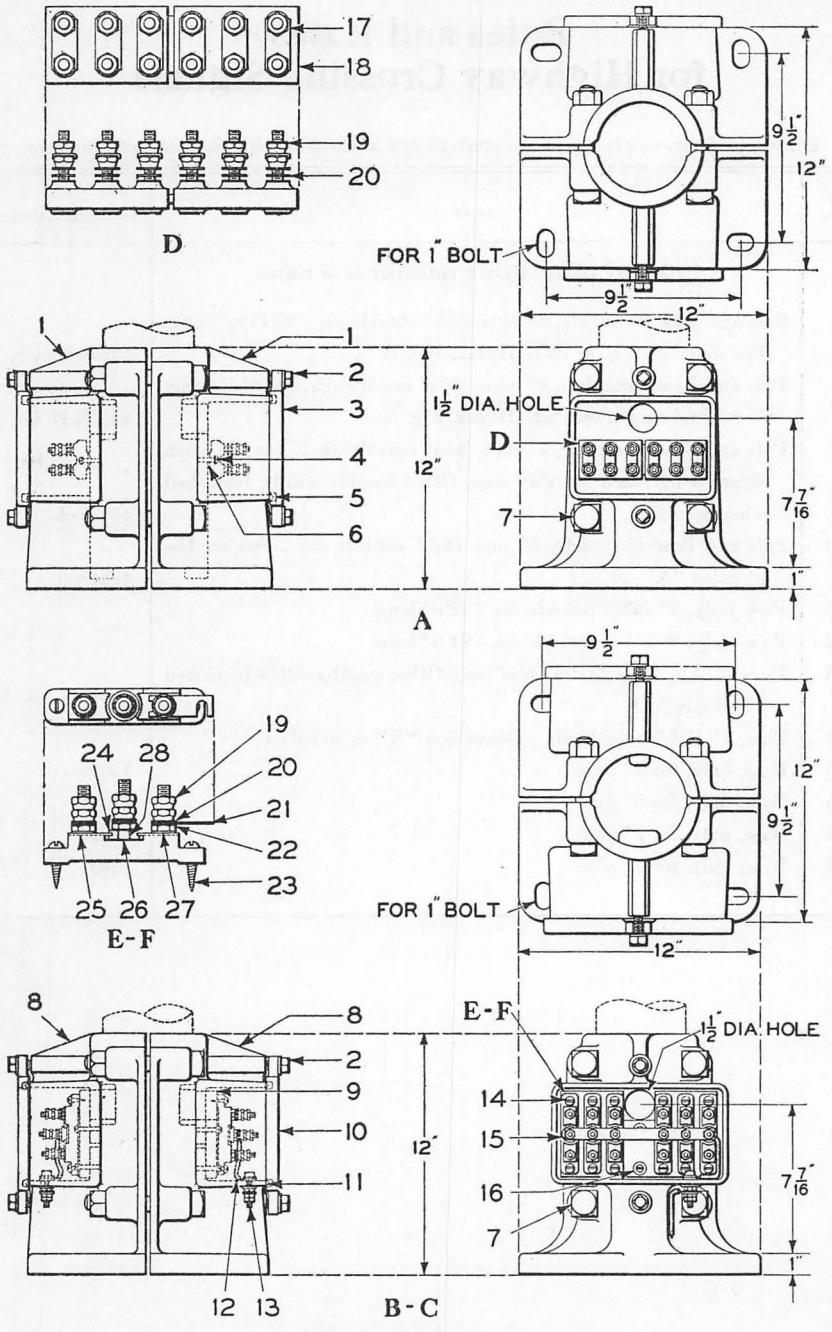

Junction Box Bases

October 1946 GENERAL RAILWAY SIGNAL COMPANY

Junction Box Bases for Highway Crossing Signals

Drawing references are shown for convenience in checking shipping lists and invoices.

Fig. No.	Name	Drawing Reference
	Order by plate, figure number and name	
A	Junction Box Base Complete, for 4″ pipe, arranged for twelve terminal blocks	43951–8 Gr. 7
A1	as above, except has terminal box on one side only and arranged for six terminal blocks, other half of base same as shown on Plate H2939, Fig. E	43951–8 Gr. 6
B	Junction Box Base Complete, for 4″ pipe, arranged for twelve lightning arresters (0-30 volts a-c. or d-c.)	43951–9 Gr. 7
B1	as above, except has terminal box on one side only and arranged for six lightning arresters, other half of base same as shown on Plate H2939, Fig. E	43951–9 Gr. 6
C	Junction Box Base Complete, for 4″ pipe, arranged for twelve lightning arresters (30-150 volts d-c. or 30-220 volts a-c.)	43951–9 Gr. 7
C1	as above, except has terminal box on one side only and arranged for six lightning arresters, other half of base same as shown on Plate H2939, Fig. E	43951–9 Gr. 6
D	Terminal Block Complete, 6 way, as shown	46048–23 Gr. 5
D1	as above, except 4 way	46048–23 Gr. 8
E	Lightning Arrester Complete, carbon, low-voltage, 0-30 volts a-c. or d-c	29284–6 Gr. 1
F	Lightning Arrester Complete, carborundum, high-voltage, 30-150 volts d-c. or 30-220 volts, a-c	29284–2 Gr. 2
1	Half Base, with terminal box	43953–25
1a	as above, except without terminal box	43953–12
2	Screw, $\frac{3}{8}$″-16 x 1″ hex. hd., with washers, for cover Fig. 3	6170–1 626–44
3	Cover, for terminal box	45571–21
4	Screw, No. 10-32 x $\frac{3}{4}$″, rd. hd., with washer, for mounting terminal blocks	3044–13 5046–1
5	Gasket, $\frac{1}{16}$″ dia. x 23$\frac{1}{2}$″ long, for cover Fig. 3	43460–4
6	Washer, for use under terminal blocks	29728

(*Continued on following page*)

GENERAL RAILWAY SIGNAL COMPANY October 1946

Junction Box Bases for Highway Crossing Signals

Drawing references are shown for convenience in checking shipping lists and invoices.

Fig. No.	Name	Drawing Reference
	Order by plate, figure number and name	
7	Bolt, ¾"-10 x 5½" sq. hd., with hex. nut, for clamping base to pipe.	0412–2
8	Half Base, with terminal box	43953–24
9	Board, for mounting arresters	54220–365
10	Cover, for terminal box	45571–22
11	Gasket, 7/16" dia. x 27¼" lg., for cover Fig. 10	43460–4
12	Connector, as shown	42760–7 Gr. 4
13	Screw, No. 14-24 x 1¾" sq. hd., with hex. nuts and washers, for ground post	350–5 42839–5 1225–2
14	Wood Screw, No. 14 x ¾" rd. hd., for mounting arresters	0252–6
15	Connector, 1⅛" centers, for arresters	4906–21
15a	as above, except 2½" centers	4906–67
16	Screw, No. 10-32 x ⅞" rd. hd., with washer, for mounting board Fig. 9	3044–15 0177–1
17	Connector, for terminal block	43587–6
18	Terminal Block, only, 6 way	5971–19 Gr. 1
18a	as above, except 4 way	5971–19 Gr. 4
19	Nut, No. 14-24 x 5/16" tk. hex., for terminal block and lightning arresters	42843–1
20	Washer, for terminal posts	1225–2
21	Connector, for lightning arrester Fig. F	29288–1
22	Nut, No. 14-24 x 3/16" tk. hex., for terminal posts	42839–5
23	Wood Screw, No. 10 x 1" lg., rd. hd., for mounting lightning arresters	0444–2
24	Ground Plate, carbon, for lightning arrester, Fig. E	29286–1
24a	as above, except carborundum for lightning arrester Fig. F	29286
25	Line Plate, for lightning arresters	29287–1
26	Washer, for use under ground plate	493–126
27	Lock Washer, for use under nut Fig. 22	53029–35
28	Bushing, for carbon ground plate	16540–17

Memoranda

PLATE H2945

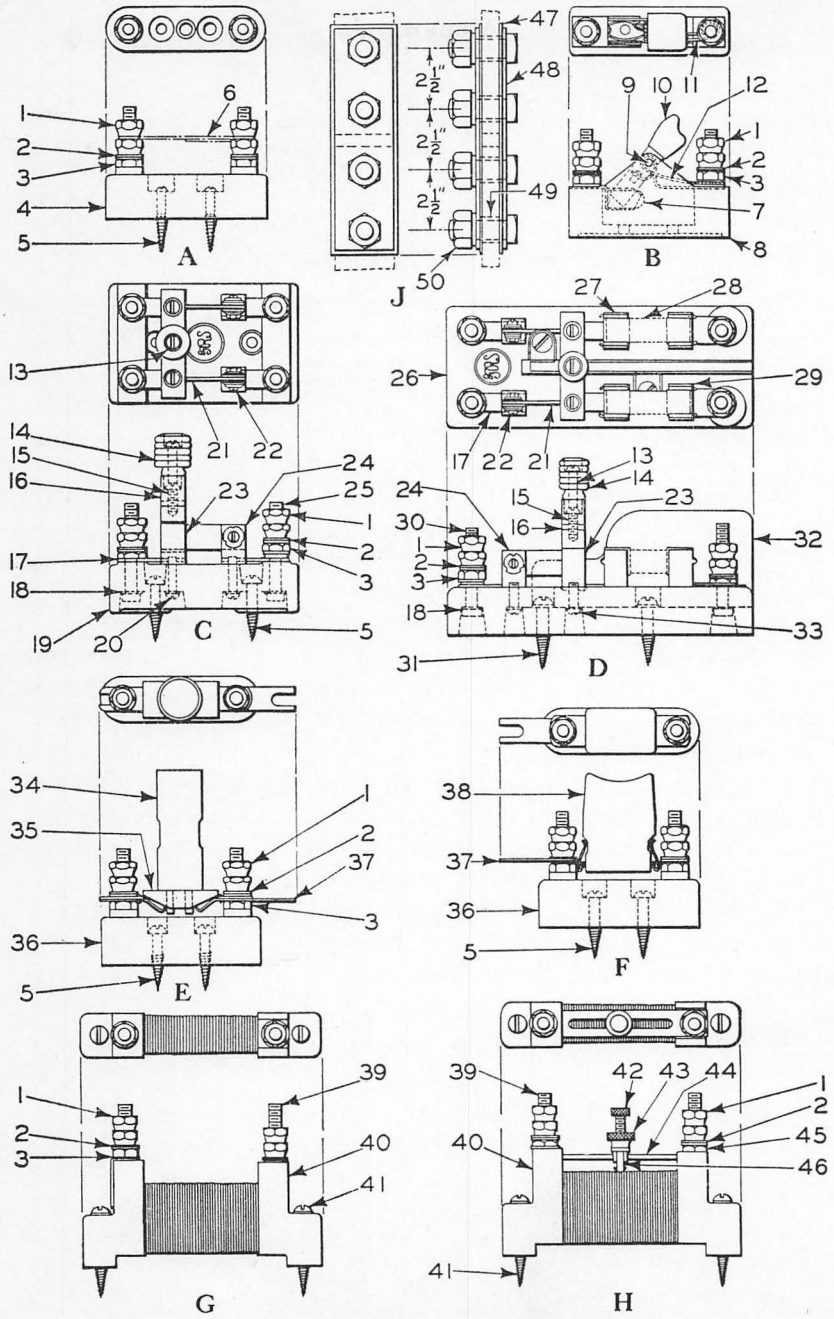

Highway Crossing Signal Accessories

October 1946 GENERAL RAILWAY SIGNAL COMPANY

Highway Crossing Signal Accessories

Drawing references are shown for convenience in checking shipping lists and invoices.

Fig. No.	Name	Drawing Reference
	Order by plate, figure number and name	
A	Terminal Block Complete, with connector, as shown	46048–22 Gr. 2
B	Battery Test Switch Complete, single pole, knife	56490 Gr. 1
C	Entrance Switch Complete, double pole, single throw, 30 amperes, 125 volts, d-c. or a-c.	53615 Gr. 1
D	Entrance Switch Complete, fused, double pole, single throw, 10 amperes, 250 volts d-c. or a-c.	53615–3 Gr. 1
E	Shunt Arrester Complete, rare gas, 13.5 volts d-c	56947 Gr. 1
F	Lightning Arrester Complete, 0-30 volts d-c. and 0-125 volts a-c. with removable glass cover	56937–5 Gr. 2
G	Type T Fixed Resistor Complete, 2.0 ohms	46450–18 Gr. 3
H	Type T Adjustable Resistor Complete, 2.6 ohms, 15 watts continuous capacity, adjustable in steps of 0.15 ohms	46450–13 Gr. 1
H1	as above, except 4.0 ohms, adjustable in steps of 0.15 ohms	46450–13 Gr. 2
H2	same as Fig. H, except 0.72 ohms, adjustable in steps of 0.028 ohms	46450–14 Gr. 2
H3	same as Fig. H, except 16 ohms, adjustable in steps of 0.32 ohms	46450–15 Gr. 1
H4	same as Fig. H, except 20 ohms, adjustable in steps of 0.4 ohms	46450–15 Gr. 2
J	Switch Rod Insulation Complete, includes 2-47, 2-48, 4-49 and 4-50. Specify whether for $\frac{3}{4}''$, 1″ or $1\frac{1}{4}''$ switch rod.	
1	Nut, No. 14-24 x $\frac{5}{16}''$ tk. hex., for terminal posts	42843–1
2	Washer, for terminal posts	1225–2
3	Nut, No. 14-24 x $\frac{3}{16}''$ tk. hex., for terminal posts	42839–5
4	Block, only, for terminal block Fig. A	47508–87
5	Wood Screw, No. 10 x $1\frac{1}{4}''$ rd. hd., for mounting blocks Figs. A, C, E and F	0248–2
6	Connector, for terminal block Fig. A	43587–7
7	Contact, for test switch	56491 Gr. 1
8	Block, only, for test switch	5971–20
9	Pin, for handle Fig. 10	446–4
10	Handle, for test switch	52744–2
11	Spring, for test switch	586–111
12	Connector Complete, for test switch	42760–62 Gr. 1

(Continued on following page)

GENERAL RAILWAY SIGNAL COMPANY October 1946

Highway Crossing Signal Accessories

Drawing references are shown for convenience in checking shipping lists and invoices.

Fig. No.	Name	Drawing Reference
	Order by plate, figure number and name	
13	Screw, No. 10-24 x 1⅛″ rd. hd., for fastening handle to crossbar	56324–3
14	Handle, for switches Figs. C and D	52744–1
15	Screw, No. 10-24 x ⅜″ rd. hd., for fastening crossbar to contact block	56324–1
16	Crossbar, for switches Figs. C and D	52746–2
17	Connector, for switches Figs. C and D	4906–51
18	Washer, for use under heads of posts Figs. 25 and 30	29728
19	Block, only, for switch Fig. C	5971–5
20	Screw, No. 8-32 x ¾″ rd. hd., with lock washer, for mounting blocks Figs. 23 and 24	2553–19 43058
21	Knife Blade, for switches Figs. C and D	52743–5
22	Screw, No. 6-32, rd. hd., with hex. nut and lock washer, for blade	3628–9 3614–5 35448–2
23	Contact Block, for switches Figs. C and D	52739–7
24	Hinge Block, for switches Figs. C and D	52739–9
25	Screw, No. 14-24 x 1⅞″ sq. hd., used as terminal post for switch Fig. C	350–6
26	Block, only, for switch Fig. D	5971–14
27	Fuse Clip, as shown	1891–4 Gr. 2
28	Cartridge Fuse, 250 volts, 10 amperes, for entrance switch	54870–10
29	Fuse Clip, as shown	1891–4 Gr. 1
30	Screw, No. 14-24 x 1¾″ sq. hd., used as terminal post for switch Fig. D	350–5
31	Wood Screw, No. 14 x 1¼″ rd. hd., for mounting switch Fig. D	35116–1
32	Barrier, for switch Fig. D	55037 Gr. 1
33	Screw, No. 8-32 x $\frac{9}{16}$″ rd. hd., with lock washer, for mounting blocks Figs. 23 and 24	49538–1 43058
34	Arrester, only, rare gas, for shunt arrester	56948
35	Adapter, for shunt arrester	56949
36	Terminal Block Complete, with posts, nuts and washers	46048–22 Gr. 1

(*Continued on following page*)

October 1946 GENERAL RAILWAY SIGNAL COMPANY

Highway Crossing Signal Accessories

Drawing references are shown for convenience in checking shipping lists and invoices.

Fig. No.	Name	Drawing Reference
	Order by plate, figure number and name	
37	Connector, only, for arresters Figs. E and F	29288–1
38	Arrester, only, for lightning arrester Fig. F	56937–6
39	Screw, No. 14-24 x 3″ sq hd., used as terminal post for resistors Figs. G and H	350–22
40	Block, only, for resistors Figs. G and H	46451–1
41	Wood Screw, No. 10 x 2″ rd. hd., with washer, for mounting resistors Figs. G and H	0631–5 5046–5
42	Screw, No. 10-32, for resistor Fig. H	46453–1
43	Knurled Nut, No. 10-32, for screw Fig. 42	48052
44	Bar, for resistor Fig. H	46452–17
45	Nut, No. 14-24 x 1/8″ tk., hex., for post Fig. 1	46989–2
46	Contact, with support and guide, for screw Fig. 42	46456 46455 46454
47	Insulation Plate, for switch rod insulation	47409
48	Splice Plate, for switch rod insulation	40640
49	Bushing, 31/32″ lg., for 3/4″ switch rods	40639
49a	as above, except 1 7/32″ lg., for 1″ switch rods	46983
49b	same as Fig. 49 except 1 15/32″ lg., for 1 1/4″ switch rods	7350–185
50	Bolt, 3/4″-10 x 3″ hex. hd., with sq. nut and lock washer, for 3/4″ switch rods	32449 029
50a	as above, except 3 1/4″ lg., for 1″ switch rods	020–1 029
50b	same as Fig. 50, except 3 1/2″ lg., for 1 1/4″ switch rods	0314 029

PLATE H2947

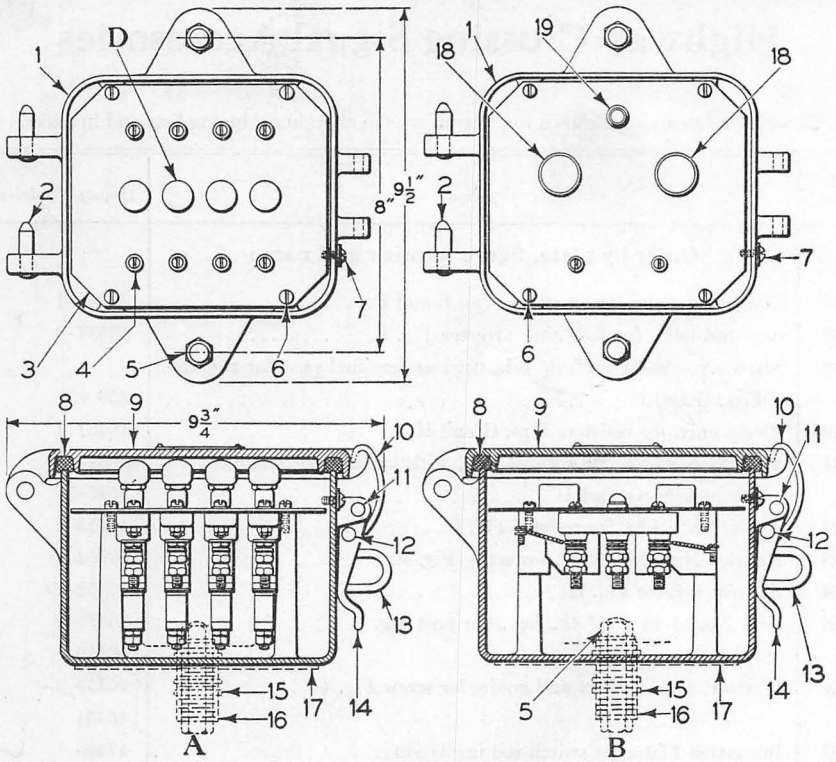

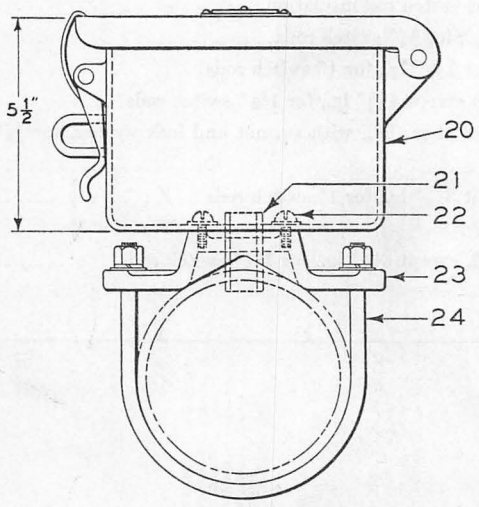

C
Test Boxes

October 1946 GENERAL RAILWAY SIGNAL COMPANY

Test Boxes for Highway Crossing Signals

Drawing references are shown for convenience in checking shipping lists and invoices.

Fig. No.	Name	Drawing Reference
	Order by plate, figure number and name	
A	Test Box Complete, with bolts for mounting on instrument case. Capacity one to four test switches.	
	Order must specify the following:	
	1—Number and type of switches. See Plate H2951.	
	2—If indicator lights are required.	
	3—Whether box is to be painted black or aluminum.	
	4—Explanation or copy of circuits	56820–8
B	Test Box Complete, with bolts for mounting on instrument case. Capacity two push buttons, flashing indicator and terminal block.	
	Order must specify the following:	
	1—Number and type of switches. See Plate H2951.	
	2—If indicator lights are required.	
	3—Whether box is to be painted black or aluminum.	
	4—Explanation or copy of circuits	56820–6
C	Test Box Complete, with "U" bolt for mounting on pipe. Capacity same as Fig. A or B.	
	Order must specify the following:	
	1—Outside dia. of pipe.	
	2—Number and type of switches. See Plate H2951.	
	3—If indicator lights are required.	
	4—Whether box is to be painted black or aluminum.	
	5—Explanation or copy of circuits	56820–7
D	Test Switch Complete, for details and order references see Plate H2951	
1	Case, only, for Figs. A and B, painted black	49133–19
1a	as above, except aluminum	49133–31
2	Stud, for cover	441–173
3	Panel, only, specify drawing number of box for which panel is required	55997–30

(*Continued on following page*)

GENERAL RAILWAY SIGNAL COMPANY October 1946

Test Boxes for Highway Crossing Signals

Drawing references are shown for convenience in checking shipping lists and invoices.

Fig. No.	Name	Drawing Reference
	Order by plate, figure number and name	
4	Screw, No. 10-32 x 7/8" fil. hd., with washer and hex. nut, for mounting switches	12563–9 5046–5 40796 44529–2
5	Bolt, 3/8"-16 x 2 1/2" hex. hd., with washers and hex. nut, for mounting test boxes	0569–2 626–44 1156–2
6	Screw, No. 10-32 x 1/2" fil. hd., for fastening panel to case	12563–1
7	Screw, No. 10-32 x 3/8" rd. hd., with washer, for padlock chain	2438–12 0177–1
8	Gasket, for cover	43786–2
9	Cover Complete, with gasket, painted black	52318–24 Gr. 1
9a	as above, except aluminum	52318–24 Gr. 3
10	Strap, for cover, painted black	30804–18
10a	as above, except aluminum	30804–22
11	Pin, 1/4" x 2 3/16", for hasp	6969–1
12	Pin, 1/4" x 1 1/4", for fastening strap to hasp	737–1
13	Staple, for hasp	16914–4
14	Hasp, for cover, painted black	16110–9
14a	as above, except aluminum	16110–17
15	Lock Nut, 3/4", for nipple	0826
16	Nipple, 3/4" x 2" for case	45929–34
17	Gasket, for bottom of case	13014–184
18	Push Button Complete, see Plate H2951	57149
19	Lamp Socket Complete, for details and order references see Plate H2951	
20	Case, only, for Fig. C, painted black	49133–29
20a	as above, except aluminum	49133–34
21	Nipple, 3/4" x 2", for case Fig. 20	47915–7
22	Screw, 1/4"-20 x 1/2" rd. hd., with lock washer, for fastening adapter to case	3955–6 53029–2

(*Continued on following page*)

October 1946 GENERAL RAILWAY SIGNAL COMPANY

Test Boxes for Highway Crossing Signals

Drawing references are shown for convenience in checking shipping lists and invoices.

Fig. No.	Name	Drawing Reference
	Order by plate, figure number and name	
23	Adapter, for case	48678–2
24	U Bolt Complete, 3/8″-16, with hex. nut and washers, for fastening test box Fig. C to 2½″ dia. pipe	50357–25 1156–2 42175 626–44
24a	as above, except for 3″ pipe	50357–26 1156–2 42175 626–44
24b	same as Fig. 24, except for 3½″ pipe	50357–27 1156 42175 626–44
24c	same as Fig. 24, except for 4″ pipe	50357–28 1156 42175 626–44
24d	same as Fig. 24, except for 4½″ pipe	50357–29 1156 42175 626–44
24e	same as Fig. 24, except for 5″ pipe	50357–24 1156 42175 626–44

PLATE H2949

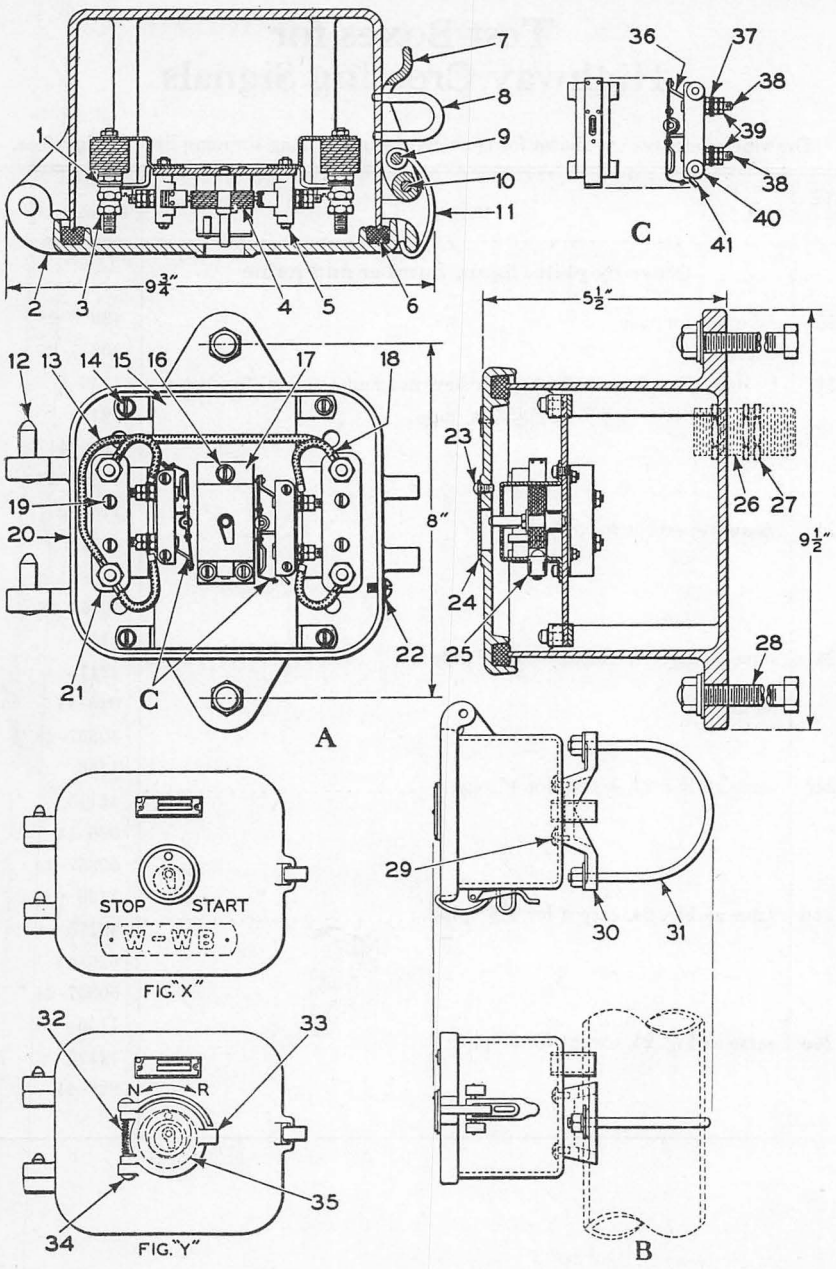

Test Boxes—Key Operated

October 1946 GENERAL RAILWAY SIGNAL COMPANY

Test Boxes—Key Operated for Highway Crossing Signals

NOTE—The following contact combinations are available on test boxes listed below:
1. One normally open and one normally closed.
2. Two normally open.
3. Two normally closed.

Test Box Fig. B is arranged for mounting to 2½", 3", 3½", 4" or 5" pipe.

Drawing references are shown for convenience in checking shipping lists and invoices.

Fig. No.	Name	Drawing Reference
	Order by plate, figure number and name	
A	Test Box Complete, with bolts for mounting on instrument case.	
	Order must specify the following:	
	1. See note above and specify contacts required.	
	2. Whether box is to be painted black or aluminum.	
	3. Whether words "Stop" and "Start" are to appear on cover as shown in Fig. X.	
	4. Whether cap as shown in Fig. Y is required.	
	5. Size and location of nipple for wires.	
	6. Sample or drawing of switch key should accompany order....	56820–4
B	Test Box Complete, with "U" bolt for mounting to pipe.	
	Order must specify the following:	
	1. Size of pipe on which box is to be mounted.	
	2. See note above and specify contacts required.	
	3. Whether box is to be painted black or aluminum.	
	4. Whether words "Stop" and "Start" are to appear on cover as shown in Fig. X.	
	5. Whether cap as shown in Fig. Y is required.	
	6. Size and location of nipple for wires.	
	7. Sample or drawing of switch key should accompany order....	56820–4
B1	as above, except without "U" bolt or adapter, for mounting to pipe.	56820–4
	Order must specify the following:	
	1. See note above and specify contacts required.	
	2. Whether box is to be painted black or aluminum.	
	3. Whether words "Stop" and "Start" are to appear on cover as shown in Fig. X.	
	4. Whether cap as shown in Fig. Y is required.	
	5. Size and location of nipple for wires.	
	6. Sample or drawing of switch key should accompany order....	56820–4

(Continued on following page)

GENERAL RAILWAY SIGNAL COMPANY October 1946

Test Boxes—Key Operated for Highway Crossing Signals

Drawing references are shown for convenience in checking shipping lists and invoices.

Fig. No.	Name	Drawing Reference
	Order by plate, figure number and name	
C	Contact Block Complete, for test box	50972 Gr. 3
1	Washer, for terminal posts	1225–2
2	Cover Complete, with gasket, painted black, with words "STOP" and "START"	52318–36 Gr. 1
2a	as above, except without words "STOP" and "START" and painted aluminum	52318–36 Gr. 2
2b	same as Fig. 2, except has cap as shown in Fig. Y and painted aluminum	52318–42 Gr. 2
3	Nut, No. 14-24 x $\frac{5}{16}$″ tk. hex., for terminal posts	42843–1
4	Cam Complete, specify drawing number of box for which cam is required	56605
5	Screw, No. 6-32 x 1½″ fil. hd., with hex. nut and lock washer, for mounting contact blocks	366–3 50314–2 53029–26
6	Gasket, for cover	43786–2
7	Hasp, for cover, painted black	16110–9
7a	as above, except aluminum	16110–17
8	Staple, for hasp	16914–4
9	Pin, ¼″ x 1¼″, for fastening strap to hasp	737–1
10	Pin, ¼″ x 2$\frac{3}{16}$″, for fastening hasp to case	6969–1
11	Strap, for hasp, painted black	30804–18
11a	as above, except aluminum	30804–22
12	Stud, hinge for cover	441–173
13	Connector, as shown, for terminal blocks	42760–87 Gr. 3
14	Screw, No. 10-32 x ½″ fil. hd., with lock washer, for mounting plate Fig. 15	12563–1 53029
15	Plate Complete, with $\frac{7}{32}$″ dia. stud for key	56604 Gr. 1
15a	as above, except with $\frac{17}{64}$″ dia. stud for key	56604 Gr. 2

(*Continued on following page*)

October 1946 GENERAL RAILWAY SIGNAL COMPANY

Test Boxes—Key Operated for Highway Crossing Signals

Drawing references are shown for convenience in checking shipping lists and invoices.

Fig. No.	Name	Drawing Reference
	Order by plate, figure number and name	
16	Screw, No. 8-32 x ¼″ fil. hd., with lock washer, for mounting bracket Fig. 17	28989–15 53029–21
17	Bracket Complete, specify drawing number of box for which bracket is required	56609
18	Connector, for contact blocks	42760–87 Gr. 1
19	Screw, No. 10-32 x ¾″ fil. hd., with hex. nut and lock washer, for mounting terminal blocks	12563–5 40796 53029–3
20	Case, only, specify drawing number of box for which case is required.	49133
21	Terminal Block, only, for test box	46048–10 Gr. 3
22	Screw, No. 10-32 x ⅜″ rd. hd., with washer, for case	2438–12 1225–2
23	Drive Screw, No. 6 x ⅜″, for cover plate	52681–8
24	Cover Plate, only	5718–25
25	Catch, for cam	56610
26	Nipple, specify drawing number of box for which nipple is required.	
27	Nut, T and B, for nipple	0826
28	Bolt, ⅜″-16 x 2½″ hex. hd., with hex. nut and washers, for mounting test box	44529–2 1156–2 626–44 0569–2
29	Screw, ¼″-20 x ½″ rd. hd., with lock washer, for fastening case to adapter	3955–6 53029–2
30	Adapter, for case, painted black	48678–1
30a	as above, except aluminum	48678–2
31	U Bolt, ⅜″-16, with hex. nut and washers, for mounting box to 2½″ dia. pipe	50357–25 1156–2 42175 626–44

(Continued on following page)

GENERAL RAILWAY SIGNAL COMPANY October 1946

Test Boxes—Key Operated for Highway Crossing Signals

Drawing references are shown for convenience in checking shipping lists and invoices.

Fig. No.	Name	Drawing Reference
	Order by plate, figure number and name	
31a	as above, except for 3″ pipe	50357–26 1156–2 42175 626–44
31b	same as Fig. 31, except for 3½″ pipe	50357–27 1156–2 42175 626–44
31c	same as Fig. 31, except for 4″ pipe	50357–28 1156–2 42175 626–44
31d	same as Fig. 31, except for 4½″ pipe	50357–29 1156–2 42175 626–44
31e	same as Fig. 31, except for 5″ pipe	50357–24 1156–2 42175 626–44
32	Spring, for cover Fig. 33	1396–13
33	Cover, only	49584–10
34	Pin, for cover	504–324
35	Gasket, for cover	43460
36	Contact Finger Complete, as shown	50965 Gr. 3 50969 28984 50970 50971

(*Continued on following page*)

October 1946 GENERAL RAILWAY SIGNAL COMPANY

Test Boxes—Key Operated for Highway Crossing Signals

Drawing references are shown for convenience in checking shipping lists and invoices.

Fig. No.	Name	Drawing Reference
	Order by plate, figure number and name	
37	Washer, for screw Fig. 38	5046–5
38	Screw, No. 10-32 x $1\frac{1}{16}$″ sq. hd., for contact block	351–21
39	Nut, No. 10-32 x $\frac{1}{8}$″ tk. hex., for screw	40796
40	Block, for contacts	50937
41	Contact, as shown	50963 Gr. 1

PLATE H2951

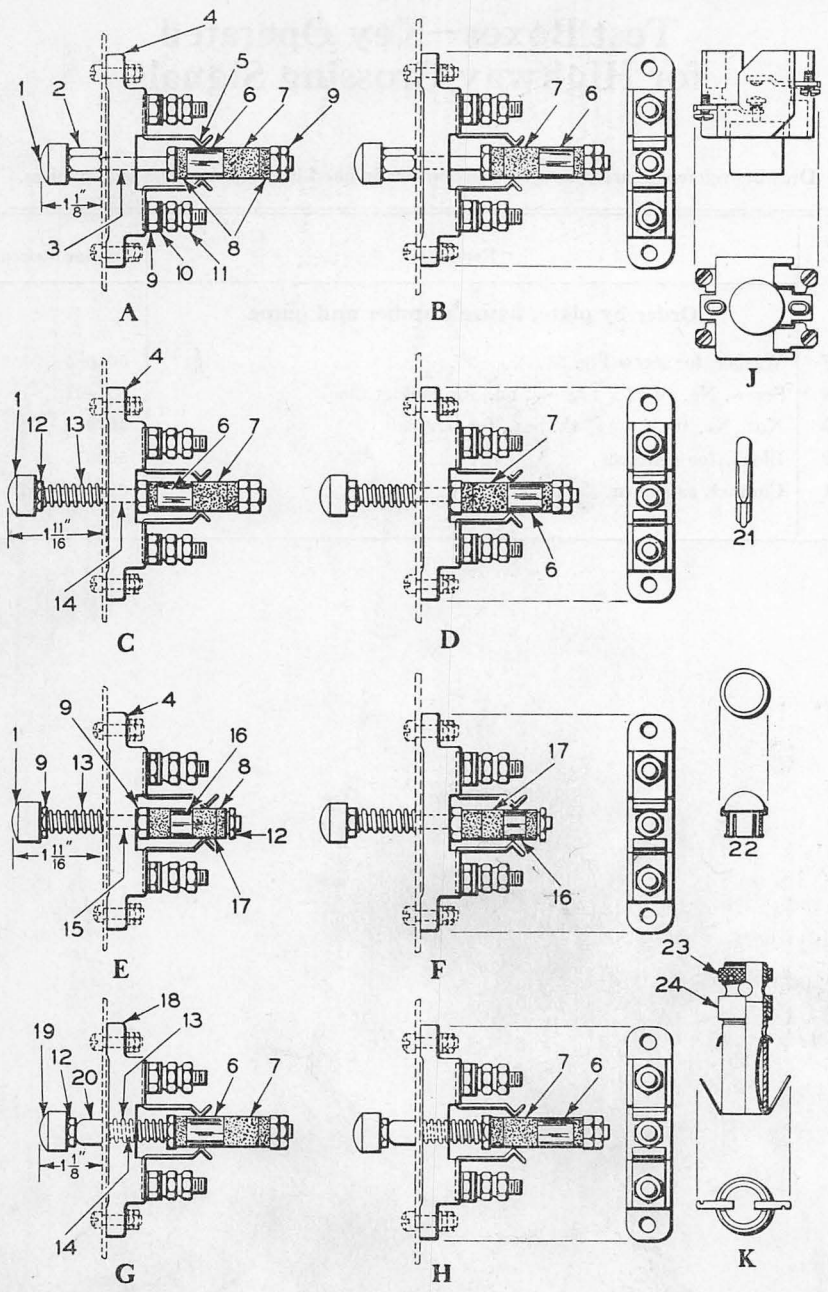

Test Switches

December 1947 GENERAL RAILWAY SIGNAL COMPANY

Test Switches for Highway Crossing Signals

Drawing references are shown for convenience in checking shipping lists and invoices.

Fig. No.	Name	Drawing Reference
	Order by plate, figure number and name	
A	Test Switch Complete, normally closed, pull type, manually operated	58229 Gr. 1
B	Test Switch Complete, normally open, pull type, manually operated	58229 Gr. 2
C	Test Switch Complete, normally closed, push type, spring return, held closed by cover of test box	58229 Gr. 3
D	Test Switch Complete, normally open, push type, spring return, held open by cover of test box	58229 Gr. 4
E	Test Switch Complete, normally closed, push type, spring return, manually operated	58229–3 Gr. 2
F	Test Switch Complete, normally open, push type, spring return, manually operated	58229–3 Gr.
G	Test Switch Complete, normally closed, pull type, spring return	58229 Gr. 6
H	Test Switch Complete, normally open, pull type, spring return	58229 Gr. 5
J	Push Button Complete, lower contacts normally open, upper contacts normally closed, includes screws for mounting	57149
K	Lamp Socket Complete, as shown	54603–14 Gr. 1
1	Button, for switches A, B, C, D, E and F	29493–1
2	Nut, No. 14-24 x $\frac{5}{8}$″ tk. hex., for switches Figs. A and B	42839–6
3	Stud, for switches Figs. A and B	879–55
4	Block, with studs for switches Figs. A, B, C, D, E and F	55744–6
5	Contact Spring, for switches	13166–2
6	Contact, for switches	6437–1
7	Insulating Bushing, $\frac{11}{16}$″ lg., for switches	7350–29
8	Insulating Bushing, $\frac{3}{16}$″ lg., for switches	7350–79
9	Nut, No. 14-24 x $\frac{3}{16}$″ tk. hex., for terminal posts	42839–5
10	Washer, for terminal posts	1225–2
11	Nut, No. 14-24 x $\frac{5}{16}$″ tk. hex., for terminal posts	42843–1
12	Nut, No. 14-24 x $\frac{1}{8}$″ tk. hex., for switches	46989–2
13	Spring, for switches	786–215

(Continued on following page)

GENERAL RAILWAY SIGNAL COMPANY December 1947

Test Switches for Highway Crossing Signals

Drawing references are shown for convenience in checking shipping lists and invoices.

Fig. No.	Name	Drawing Reference
	Order by plate, figure number and name	
14	Stud, for switches Figs. C, D, G and H	879–56
15	Stud, for switches Figs. E and F	879–66
16	Contact, for switches Figs. E and F	6437–3
17	Insulating Bushing, $\frac{7}{16}$" lg., for switches Figs. E and F	7350–187
18	Block, with studs, for switches Figs. G and H	55744–7
19	Button, for switches Figs. G and H	29493–29
20	Bushing, for switches Figs. G and H	8942–54
21	Lamp, specify voltage and wattage of lamp	52879
22	Bulls Eye, red opalescent, for lamp socket	47501–6
23	Nut, for holding receptacle to panel	846–6
24	Ferrule, for socket	19433–4

Memoranda

PLATE H2955

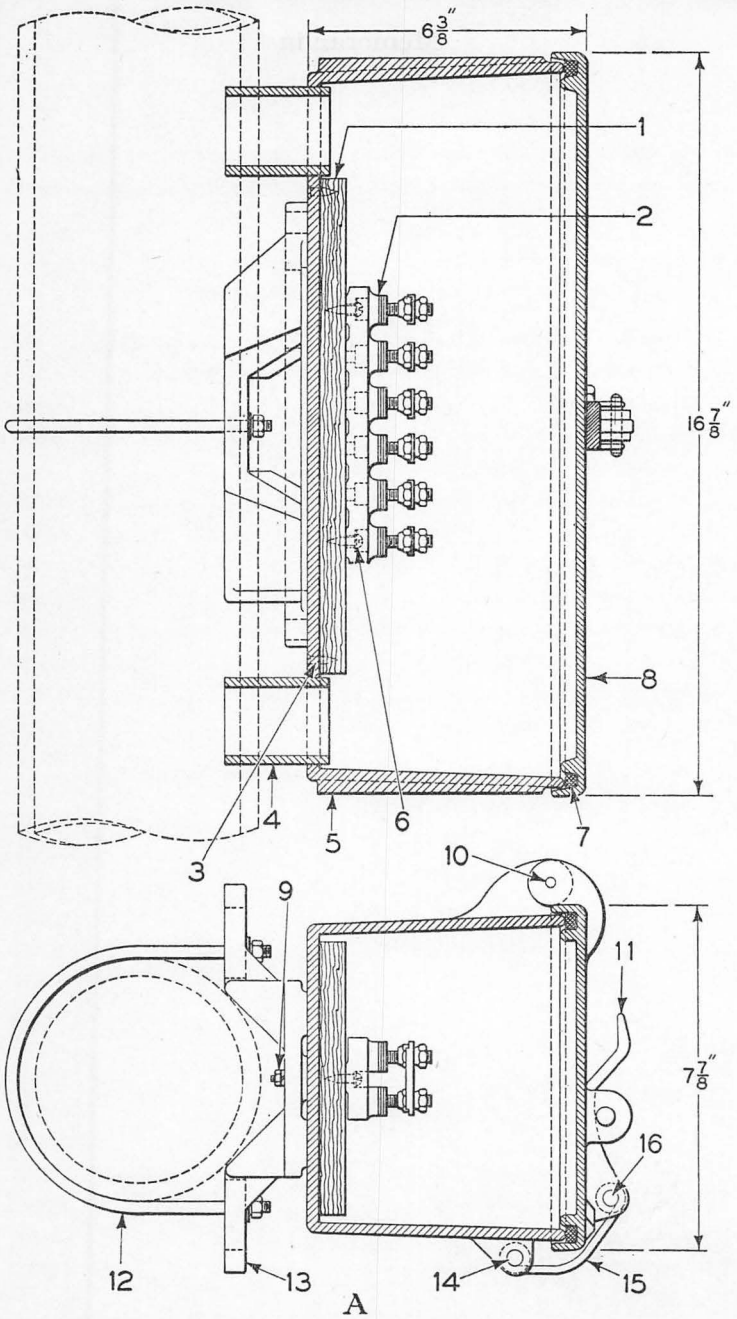

A

Junction Box

October 1946 GENERAL RAILWAY SIGNAL COMPANY

Junction Box

Drawing references are shown for convenience in checking shipping lists and invoices.

Fig. No.	Name	Drawing Reference
	Order by plate, figure number and name	
A	Junction Box Complete, with six-way terminal block, has two 1¾″ dia. bushings in rear of box for wires from pole. Arranged for mounting with "U" bolt to 6″ dia. pipe	43920–6 Gr. 5
A1	as above, except for 8″ dia. pipe	43920–6 Gr. 6
1	Board, only, for mounting terminal board	
2	Terminal Block Complete, 6-way	46048–23 Gr. 5
3	Wood Screw, No. 10 x ⅝″ fl. hd., for fastening board Fig. 1 to case	0559–1
4	Bushing, 2″ O.D., for wires	35382
5	Box, only, for junction boxes	31807–22
6	Wood Screw, No. 10 x ¾″ rd. hd., with washer, for mounting terminal board	42068–1 5046–1
7	Gasket, for cover	43786–2
8	Cover, only, for junction boxes	31808
9	Screw, ⅜″-16 x 1¼″ fl. hd., with hex. nut and lock washer, for fastening adapter to junction box	2473–1 1156–2 42175
10	Stud, for hinging cover	441–455
11	Hasp, for cover	29485
12	U Bolt, ½″-13, with hex. nut and washer, for fastening junction box to 6″ pipe	3584 26747 091–7 626–35
12a	as above, except for 8″ pipe	20476–42 26747 091–7 626–35
13	Adapter, for junction boxes	48678
14	Pin, for fastening strap to lug	5188
15	Strap, for hasp	29489
16	Pin, for fastening strap to hasp	1870

Memoranda

Types XA and XB Color-light Signal Units

For Ordering Replacement Parts Only

Drawing references are shown for convenience in checking shipping lists and invoices.

Fig. No.	Name	Drawing Reference
	Order by plate, figure number and name	
21	Screw, No. 10-32 x 3/8" rd. hd., includes nut, for fastening retainer Fig. 20 to case	2438–12
22	Sidelight Glass, for signal unit	577–2
22a	Disc, for use when sidelights are not used	924–3
23	Ring, for holding glass Fig. 22 in place	39719–21
24	Wing Screw, 3/8"-16, for use with plate Fig. 25, for locking signal unit not equipped with lugs for padlock	43712–4
25	Plate, for locking signal unit, used with wing screw Fig. 24	55996 Gr. 1
26	Hood, for backlight, includes screw and nut, for fastening lens Fig. 28 and ring Fig. 29	305–238
26a	as above, except with holes for mounting guard Fig. 36	55052–1 12280–3 31784–1
27	Case, only, for signal unit Fig. B	55052–6
28	Lens, red, has 30 degree spread	12280–3 31784–1
28a	as above, except has 45 degrees deflection	55051
29	Ring, for holding lens Fig. 28 in signal unit	45699–1
30	Gasket, for lens Fig. 28	45699–2
31	Gasket, for use between case and backlight hood	43712–3
32	Reflector Complete, with washer for signal unit Fig. B	13014–74
33	Reflector Complete, for backlights	47562
34	Roundel Guard, steel wire, for signal units	55343–1 Gr. 2
35	Screw, No. 10-32 x 5/16" rd. hd., with lock washer, for mounting guards Figs. 34 and 36	55130 Gr. 1
36	Lens Guard, steel wire, for backlights	38040–2 Gr. 2 3044–3 53029–7 38040–11 Gr. 2

PLATE H293

GENERAL RAILWAY SIGNAL COMPANY

October 1946

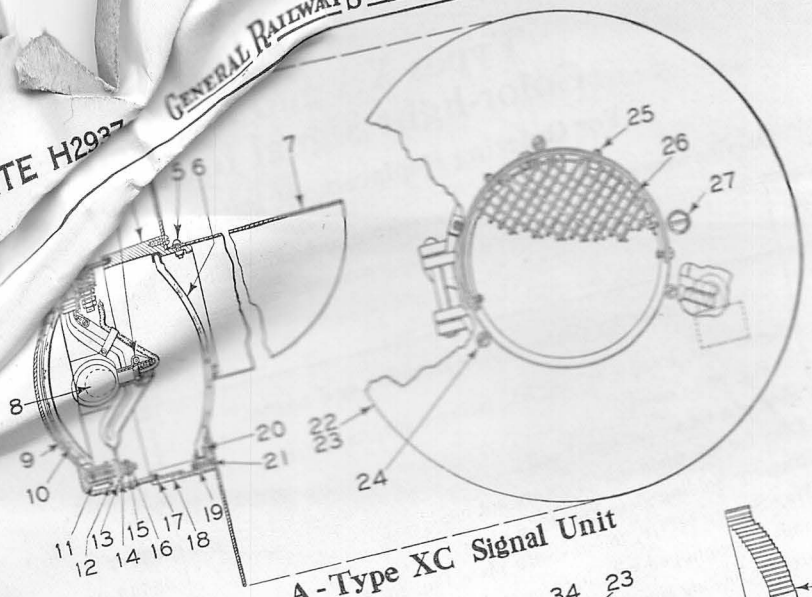

A - Type XC Signal Unit

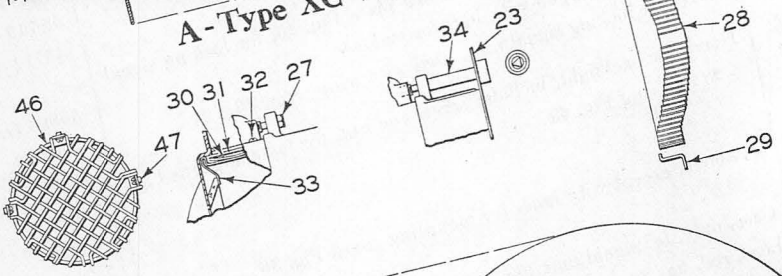

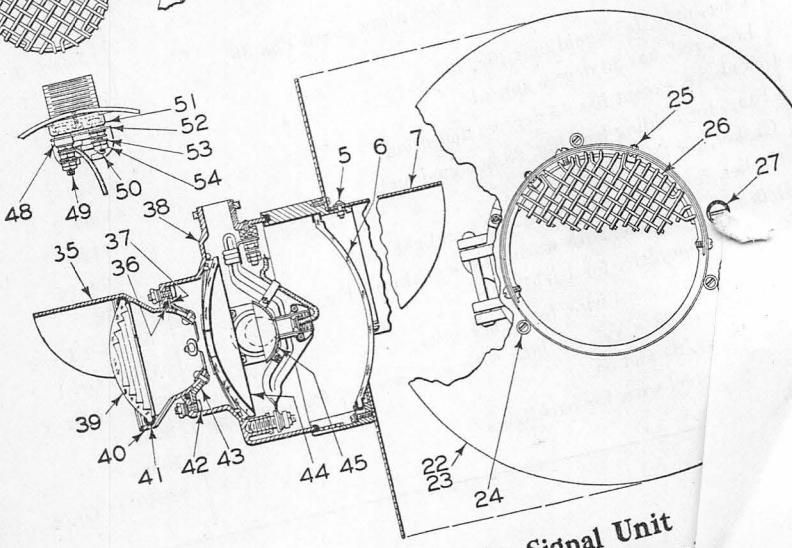

B - Type XD Signal Unit

Types XC and XD Color-light Signa

October 1946 GENERAL RAILWAY SIGNAL COMPANY

Types XA and XB Color-light Signal Units

For Ordering Replacement Parts Only

Drawing references are shown for convenience in checking shipping lists and invoices.

Fig. No.	Name	Drawing Reference
	Order by plate, figure number and name	
21	Screw, No. 10-32 x 3/8″ rd. hd., includes nut, for fastening retainer Fig. 20 to case	2438–12 577–2
22	Sidelight Glass, for signal unit	924–3
22a	Disc, for use when sidelights are not used	39719–21
23	Ring, for holding glass Fig. 22 in place	43712–4
24	Wing Screw, 3/8″-16, for use with plate Fig. 25, for locking signal unit not equipped with lugs for padlock	55996 Gr. 1
25	Plate, for locking signal unit, used with wing screw Fig. 24	305–238
26	Hood, for backlight, includes screw and nut, for fastening lens Fig. 28 and ring Fig. 29	55052–1 12280–3 31784–1
26a	as above, except with holes for mounting guard Fig. 36	55052–6 12280–3 31784–1
27	Case, only, for signal unit Fig. B	55051
28	Lens, red, has 30 degree spread	45699–1
28a	as above, except has 45 degrees deflection	45699–2
29	Ring, for holding lens Fig. 28 in signal unit	43712–3
30	Gasket, for lens Fig. 28	13014–74
31	Gasket, for use between case and backlight hood	47562
32	Reflector Complete, with washer for signal unit Fig. B	55343–1 Gr. 2
33	Reflector Complete, for backlights	55130 Gr. 1
34	Roundel Guard, steel wire, for signal units	38040–2 Gr. 2
35	Screw, No. 10-32 x 5/16″ rd. hd., with lock washer, for mounting guards Figs. 34 and 36	3044–3 53029–7
36	Lens Guard, steel wire, for backlights	38040–11 Gr. 2

PLATE H2937

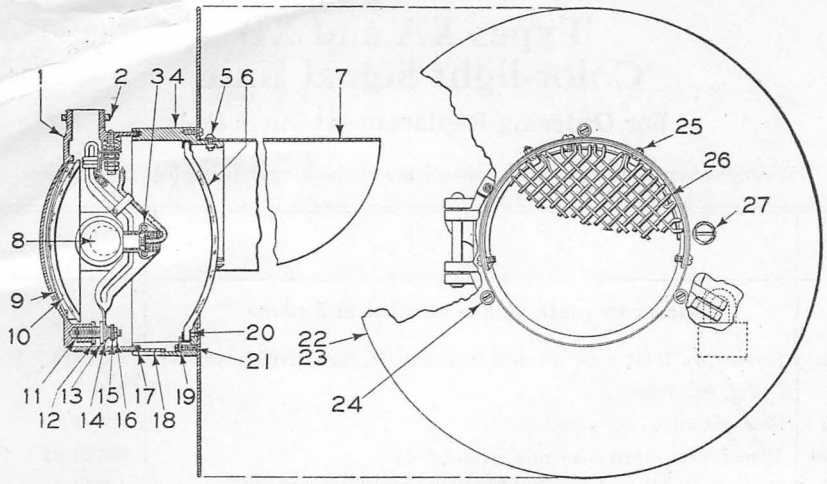

A - Type XC Signal Unit

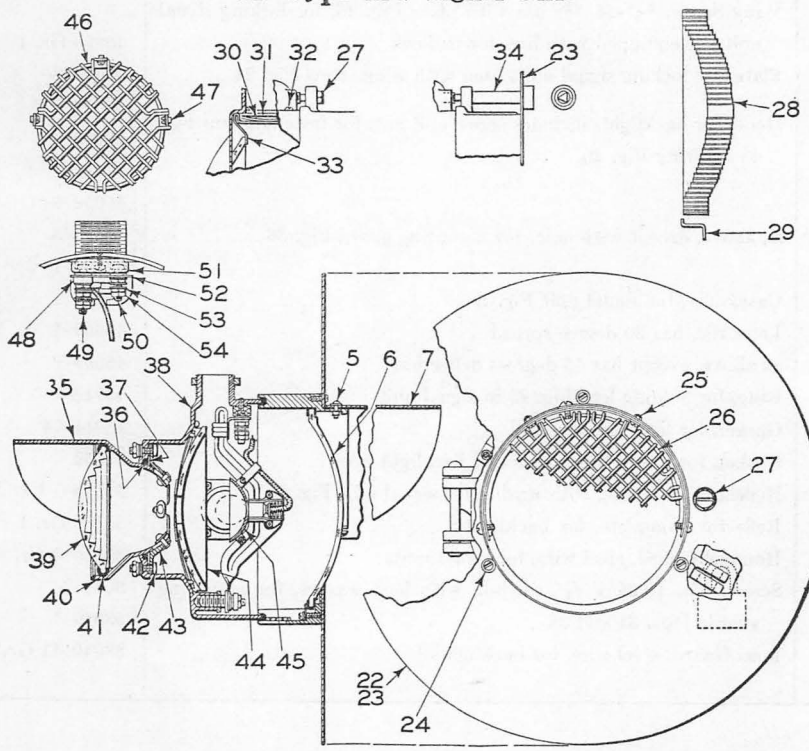

B - Type XD Signal Unit

Types XC and XD Color-light Signal Units

Section H, Part 30

Color-Light Signal Details

Supersedes Section H, Part 30, Dated October 1925

PRINTED IN U.S.A.

GENERAL RAILWAY SIGNAL COMPANY October 1944

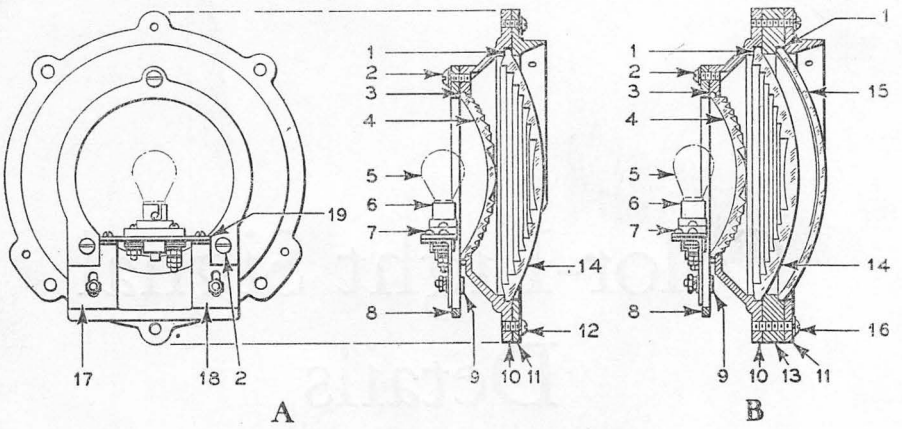

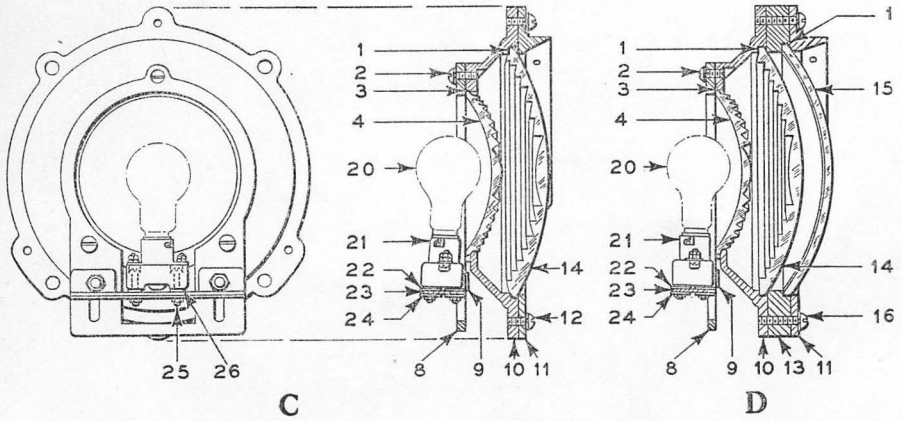

Color-Light Signals
Lens Units for Types D, E, G, and L Signals

Color-Light Signals

Lens Units for Types D, E, G & L Signals

Note: Lamps are not furnished with lens units. Refer to Section H, Part 39 and order separately.

Inner lenses Fig. 4 are furnished in GREEN, YELLOW, RED, CLEAR, PURPLE, LUNAR WHITE and BLUE. Specify color desired when ordering.

Lens units A, B, C and D are regularly assembled with an 8⅜" diameter, outer lens Fig. 14. This lens has a 40-degree deflecting bull's-eye which deflects part of the main beam downward and to the left, as viewed when facing the lens, at an angle of 30 degrees from the vertical for close-up indications. This outer lens can be rotated to change the angle of deflection as conditions require, and can be adjusted on signals with or without outer roundels. If other lenses or lens combinations are required, same must be specified.

Drawing references are shown for convenience in checking shipping lists and invoices.

Fig. No.	Name	Drawing Reference
	Order by plate, figure number and name	
A	Doublet Lens Unit Complete, for use with single contact, candelabra bayonet base lamp, with 8⅜" dia., 4" focus, outer lens with a 40-degree bull's-eye, Fig. 14, and 5½" dia. inner lens, Fig. 4. The outer lens deflects part of the main beam to one side through an angle of 40 degrees for close-up indications. Regularly used on Types D, E, G, and L signals on tangent track. Specify color of inner lens.	36762–17
B	as above, except with 8⅜" dia., 20-degree deflecting outer roundel Fig. 15. This lens combination deflects part of the main beam to one side through an angle of 20 degrees. For use on curved track. Specify color of inner lens.	36762–35
B1	same as Fig. A, except with 8⅜" dia., 40-degree deflecting outer roundel Fig. 15b. This lens combination deflects part of the main beam to one side through an angle of 40 degrees. For use on curved track. Specify color of inner lens.	36762–35
B2	same as Fig. A, except with 8⅜" dia., 15-degree Spredlite outer roundel Fig. 15c. This lens combination spreads the main beam 7½ degrees to each side of the beam axis for a total spread of 15 degrees. For use on sharp and reverse curves. Specify color of inner lens.....	36762–35

(Continued on following page)

GENERAL RAILWAY SIGNAL COMPANY October 1944

Color-Light Signals

Lens Units for Types D, E, G & L Signals

Drawing references are shown for convenience in checking shipping lists and invoices.

Fig. No.	Name	Drawing Reference
	Order by plate, figure number and name	
B3	same as Fig. A, except with 8⅜″ dia., 30-degree Spredlite outer roundel Fig. 15d. This lens combination spreads the main beam 15 degrees to each side of the beam axis for a total spread of 30 degrees. This lens materially reduces the range of the signal and is used only on severe curves. Specify color of inner lens.....	36762–35
B4	same as Fig. A, except with 8⅜″ dia., 70-degree Spredlite outer roundel Fig. 15f. This lens combination spreads the main beam 35 degrees to each side of the beam axis for a total spread of 70 degrees. This lens combination greatly reduces the range of the signal and is used only on "S" curves or severe curves in one direction. Specify color of inner lens.....	36762–35
C	Doublet Lens Unit Complete, for use with rebased lamp with 8⅜″ dia., 4″ focus, 40-degree hot-spot outer lens Fig. 14 and 5½″ dia., inner lens Fig. 4. The outer lens deflects part of the main beam to one side through an angle of 40 degrees, for close-up indications. Regularly used on Types D, E, G, and L signals on tangent track. Specify color of inner lens.....	36762–23
D	as above, except with 8⅜″ dia., 20-degree deflecting outer roundel Fig. 15. This lens combination deflects part of the main beam to one side through an angle of 20 degrees. For use on curved track. Specify color of inner lens.....	36762–22
D1	same as Fig. C, except with 8⅜″ dia., 40-degree deflecting outer roundel Fig. 15b. This lens combination deflects part of the main beam to one side through an angle of 40 degrees. For use on curved track. Specify color of inner lens	36762–22
D2	same as Fig. C, except with 8⅜″ dia., 15-degree Spredlite outer roundel Fig. 15c. This lens combination spreads the main beam 7½ degrees to each side of the beam axis for a total spread of 15 degrees. For use on sharp and reverse curves. Specify color of inner lens.....	36762–22

(*Continued on following page*)

Color-Light Signals

Lens Units for Types D, C, G & L Signals

Drawing references are shown for convenience in checking shipping lists and invoices.

Fig. No.	Name	Drawing Reference
	Order by plate, figure number and name	
D3	same as Fig. C, except with 8⅜″ dia., 30-degree Spredlite outer roundel Fig. 15d. This lens combination spreads the main beam 15 degrees to each side of the beam axis for a total spread of 30 degrees. This lens materially reduces the range of the signal and is used only on severe curves. Specify color of inner lens	36762–22
D4	same as Fig. C, except with 8⅜″ dia., 70-degree Spredlite outer roundel Fig. 15f. This lens combination spreads the main beam 35 degrees to each side of the beam axis for a total spread of 70 degrees. This lens combination greatly reduces the range of the signal and is used only on "S" curves or severe curves in one direction. Specify color of inner lens	36762–22
1	Gasket, for outer lens Fig. 14 and outer roundel Fig. 15	13014–57
2	Screw, No. 14-24 x ⅝″ rd. hd., with lock washer, for fastening ring Fig. 8 to bezel ring Fig. 10	1411–7 0510
3	Candle Wicking, 17¼″ long, for inner lens Fig. 4	0160
4	Inner Lens, 5½″ dia., ½″ focus, green, for lens units Figs. A, B, C, and D	43988
4a	as above, except yellow	43988–1
4b	same as Fig. 4, except red	43988–2
4c	same as Fig. 4, except clear	43988–3
4d	same as Fig. 4, except purple	43988–4
4e	same as Fig. 4, except lunar white	43988–5
4f	same as Fig. 4, except blue	43988–7
5	Incandescent Lamp, single contact, candelabra bayonet base. Refer to Section H, Part 39 and order separately	34866
6	Receptacle Complete, for single contact, candelabra bayonet base lamp. For lens units Figs. A and B	53058 Gr. 3
7	Screw, No. 8-32 x ¼″ rd. hd., for fastening receptacle to brackets Figs. 17 and 18	2553–7

(*Continued on following page*)

GENERAL RAILWAY SIGNAL COMPANY October 1944

Color-Light Signals

Lens Units for Types D, E, G & L Signals

Drawing references are shown for convenience in checking shipping lists and invoices.

Fig. No.	Name	Drawing Reference
	Order by plate, figure number and name	
8	Ring, for inner lens and receptacle support. For lens units Figs. A, B, C, and D	43983–11
9	Screw, No. 14-24 x ¾″ rd. hd., with hex. nut, lock washer, and .040″ th. washer for fastening brackets Figs. 17, 18 and 23 to ring Fig. 8	3034–3 42839 0510 1225–2
10	Bezel Ring, for inner and outer lenses of lens units Figs. A, B, C and D	43983–36
11	Bezel Ring, for outer lens of lens units Figs. A, B, C and D	43983–12
12	Screw, No. 14-24 x 9/16″ rd. hd., with lock washer. For Figs. A and C.	0649 0510
13	Ring, for outer roundel Fig. 15. For Figs. B and D	43983–37
14	Outer Lens, 8⅜″ dia., 4″ focus, clear, hot-spot 40-degree deflecting bull's-eye, which deflects part of the main beam to one side through an angle of 40 degrees, for close-up indications. Regularly assembled in lens units Figs. A, B, C and D. See explanation at the beginning of this section	43987–12
14a	same as Fig. 14, except 20-degree half-toric outer lens which gives a 20-degree downward spread for close-up indications. Listed for replacements only	47976
14b	same as Fig. 14, except 12-degree Spredlite outer lens which spreads the main beam 6 degrees to each side of the beam axis for a total spread of 12 degrees. Listed for replacements only	43987–2
14c	same as Fig. 14, except 12-degree Spredlite half-toric outer lens which spreads the main beam 6 degrees to each side of the beam axis for a total spread of 12 degrees and also gives a 20-degree downward spread for close-up indications. Listed for replacements only	43987–13
14d	same as Fig. 14, except 4″ focus, 30-degree Spredlite outer lens which spreads the main beam 15 degrees to each side of the beam axis for a total spread of 30 degrees. Listed for replacements only	43987–15

(Continued on following page)

Color-Light Signals

Lens Units for Types D, E, G & L Signals

Drawing references are shown for convenience in checking shipping lists and invoices.

Fig. No.	Name	Drawing Reference
	Order by plate, figure number and name	
14e	same as Fig. 14, except 30-degree Spredlite half-toric outer lens which spreads the main beam 15 degrees to each side of the beam axis for a total spread of 30 degrees. It also gives a 20-degree downward spread for close-up indications. Listed for replacements only	43987–16
15	Outer Roundel, 8⅜″ dia., 20-degree deflecting, for lens units Figs. B and D. Deflects part of the main beam through an angle of 20 degrees to one side of the beam axis. For use on curved track	9238–38
15a	as above, except with plain center for greater range. Listed for replacements only	9238–40
15b	same as Fig. 15, except 40-degree deflecting roundel with plain center, which deflects part of the main beam through an angle of 40 degrees to one side of the beam axis. For use on curved track	9238–53
15c	same as Fig. 15, except 15-degree Spredlite roundel which spreads the main beam 7½ degrees to each side of the beam axis for a total spread of 15 degrees. For use on sharp curves	9238–75
15d	same as Fig. 15, except 30-degree Spredlite roundel which spreads the main beam 15 degrees to each side of the beam axis for a total spread of 30 degrees. This roundel materially reduces the range of the signal and is used only on severe curves	53142–1
15e	same as Fig. 15d, except with plain center, for greater range. Listed for replacements only	53142–2
15f	same as Fig. 15, except 70-degree Spredlite roundel which spreads the main beam 35 degrees to each side of the beam axis for a total spread of 70 degrees. This roundel greatly reduces the range of the signal and is used only on "S" curves or severe curves in one direction	53142–12
16	Screw, No. 14-24 x 1¼″ rd. hd., with lock washer. For Figs. B and D	0660 0510

(*Continued on following page*)

GENERAL RAILWAY SIGNAL COMPANY October 1944

Lens Units for Color-Light Signals

Drawing references are shown for convenience in checking shipping lists and invoices.

Fig. No.	Name	Drawing Reference
	Order by plate, figure number and name	
17	Bracket, right-hand, for mounting and adjusting receptacle. For Figs. A and B	49092–7
18	as above, except left-hand	49092–8
19	Plate, for mounting receptacle Fig. 6	45955–15
20	Incandescent Lamp, 3-pin rebased. Refer to Section H, Part 39 and order separately	47438
21	Receptacle Complete, for 3-pin rebased lamp. For lens units C and D	49102–8 Gr. 1
22	Washer, for screw Fig. 25	3890–1
23	Bracket, for mounting and adjusting receptacle. For Figs. C and D	49092–1
24	Lock Washer, for screw Fig. 25	34494
25	Screw, No. 10-32 x 1⅛″ rd. hd., with hex. nut, for fastening receptacle to bracket	3283 577
26	Pasteboard Washer, for screw Fig. 25. Insulator between receptacle and bracket. For Figs. C and D	13324

Memoranda

PLATE H3003

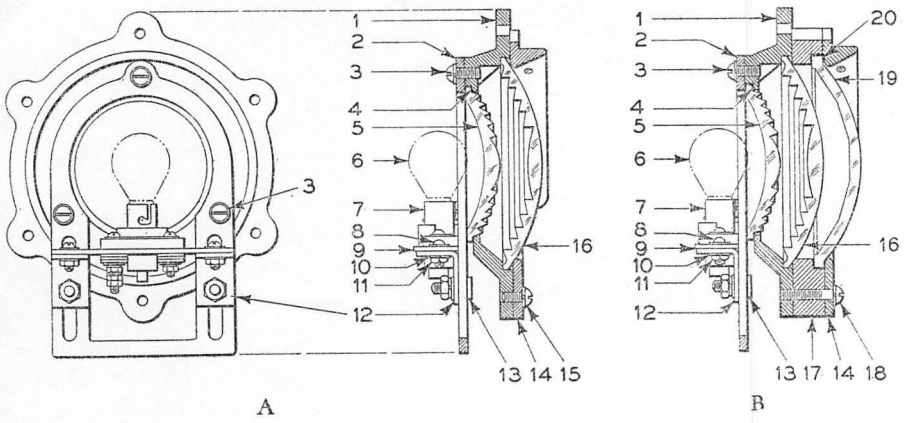

A B

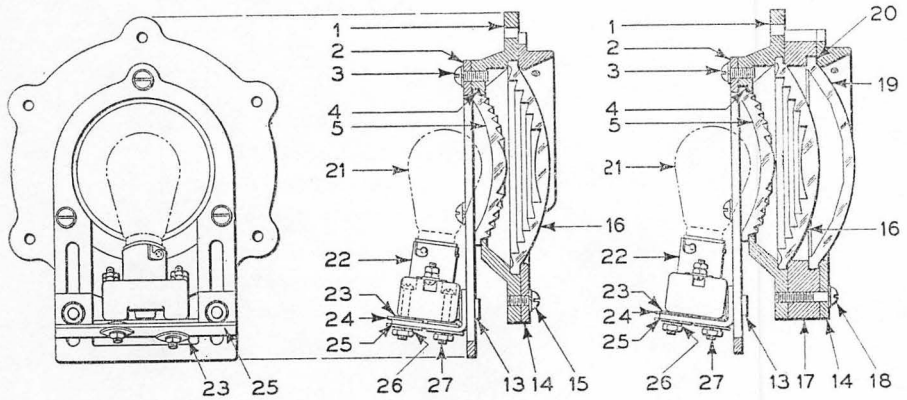

C D

Color-Light Signals
Lens Units for Type F Signals, Marker Lights, and Semaphore Lamps

October 1944 GENERAL RAILWAY SIGNAL COMPANY

Color-Light Signals

Lens Units for Type F Ground and Dwarf Signals, Marker Lights, and Semaphore Lamps

Note: Lamps are not furnished with lens units. Refer to Section H, Part 39 and order separately.

Inner lenses, Fig. 5 are furnished in CLEAR, GREEN, YELLOW, RED, PURPLE, LINAR WHITE and BLUE. Specify color desired when ordering.

Lens units A, B, C, and D are regularly assembled with a 5″ diameter, plain outer lens Fig. 16. A 5″ dia., 40-degree deflecting outer roundel Fig. 19 is supplied when lens units are for use in ground signals on curved track and in dwarf signals.

On ground signals, this outer roundel is positioned so that its secondary beam is deflected downward and to the left, as viewed when facing the lens, at an angle of 30 degrees from the vertical. On dwarf signals this secondary beam is inverted to deflect upward and to left, as viewed when facing the lens, for close-up indications.

The outer roundel can be rotated to change the angle of deflection as conditions require. If other lenses and lens combinations not listed are required, same must be specified.

Drawing references are shown for convenience in checking shipping lists and invoices.

Fig. No.	Name	Drawing Reference
	Order by plate, figure number and name	
A	Doublet Lens Unit Complete, for use with single contact, candelabra bayonet base lamp, with 5″ dia., 2¾″ focus, outer doublet standard lens Fig. 16 and 3⅝″ dia. inner lens Fig. 5, color as specified. Regularly used in marker lights and semaphore lamps	36762–15
B	as above, except with 5″ dia., 40-degree deflecting outer roundel Fig. 19. When used on Type F dwarf signals, the outer roundel is inverted, deflecting part of the main beam upward and to one side through an angle of 40 degrees. Also for use on Type F ground signals and marker lights on curved track. This lens combination deflects part of the main beam to one side through an angle of 40 degrees. Specify color of inner lens	36762–30
C	same as Fig. A, except for use with rebased lamp. Specify color of inner lens	36762–19

(*Continued on following page*)

GENERAL RAILWAY SIGNAL COMPANY October 1944

Color-Light Signals

Lens Units for Type F Ground and Dwarf Signals, Marker Lights, and Semaphore Lamps

Drawing references are shown for convenience in checking shipping lists and invoices.

Fig. No.	Name	Drawing Reference
	Order by plate, figure number and name	
D	same as Fig. B, except for use with rebased lamp. Specify color of inner lens	36762–13
1	Ring for inner and outer lenses. For Figs. A, B, C, and D	43983–27
2	Bezel Ring, for inner lens, and receptacle support. For Figs. A, B, C, and D	43983–5
3	Screw No. 14-24 x 5/8″ rd. hd., as shown, with lock washer	1411–7 0510
4	Candle Wicking, 11″ long, for inner lens Fig. 5	0160
5	Inner Lens, 3 5/8″ dia., 5/8″ focus, clear. For Figs. A, B, C, and D	45926
5a	as above, except green	45926–1
5b	same as Fig. 5, except yellow	45926–2
5c	same as Fig. 5, except red	45926–3
5d	same as Fig. 5, except purple	45926–4
5e	same as Fig. 5, except lunar white	45926–5
5f	same as Fig. 5, except blue	45926–6
6	Incandescent Lamp, single contact, candelabra bayonet base. Refer to Section H, Part 39 and order separately	34866
7	Receptacle Complete, for single contact, candelabra bayonet base lamp. For Figs. A and B	53058 Gr. 3
8	Screw, No. 10-32 x 1/2″ rd. hd., with 1/32″ th. washer for fastening plate Fig. 9 to brackets	2438–1 40791
9	Plate, for mounting receptacle	45955–14
10	Lock Washer, for screw Fig. 8	0622
11	Nut, No. 10—32 x 1/8″ th., for screw Fig. 8	577-2
12	Bracket, for mounting and adjusting receptacle. For Figs. A and B	49092–6
13	Screw No. 14-24 x 3/4″ rd. hd., with hex. nut, lock washer and .040″ th. washer for fastening brackets. Figs. 12 and 24 to bezel ring	3034–3 42839 0510 1225–2
14	Bezel Ring, for outer lens. For Figs. A, B, C, and D	43983–6

(*Continued on following page*)

Color-Light Signals

Lens Units for Type F Ground and Dwarf Signals, Marker Lights, and Semaphore Lamps

Drawing references are shown for convenience in checking shipping lists and invoices.

Fig. No.	Name	Drawing Reference
	Order by plate, figure number and name	
15	Screw, No. 14-24 x ½″ rd. hd., with lock washer. For Figs. A and C	50595-2 0510
16	Outer Lens, 5″ dia., 2¾″ focus, outer doublet standard. Regularly used on marker lights and semaphore lamps	45930
16a	as above, except 20-degree half-toric outer lens which gives a 20-degree downward spread for close-up indications. Listed for replacements only	45930-1
16b	same as Fig. 16, except 15-degree Spredlite outer lens which spreads the main beam 7½ degrees to each side of the beam axis for a total spread of 15 degrees. Listed for replacements only	45930-2
17	Ring, for outer roundel Fig. 19. For Figs. B and D	43983-23
18	Screw, No. 14-24 x 1¼″ rd. hd., with lock washer. For Figs. B and D	1411-8 0510
19	Outer Roundel, 5″ dia., 40-degree deflecting, for lens units Figs. B and D. Deflects part of the main beam through an angle of 40 degrees to one side of the beam axis. For use on curved track	9238-39
20	Rubber Gasket, for outer roundel. For Figs. B and D	13014-50
21	Incandescent Lamp. 3-pin rebased. Refer to Section H, Part 39 and order separately	47438
22	Receptacle Complete, for 3-pin rebased lamp. For Figs. C and D	49102-8 Gr. 1
23	Pasteboard Washer, for screw Fig. 27. Insulator between receptacle and bracket	13324
24	Washer, for screw Fig. 27	3890-1
25	Bracket, for mounting and adjusting receptacle. For Figs. C and D	49092-3
26	Lock Washer, for screw Fig. 27	34494
27	Screw, No. 10-32 x 1¼″ rd. hd., with hex. nut for fastening receptacle to bracket	2438-21 577

PLATE H3005

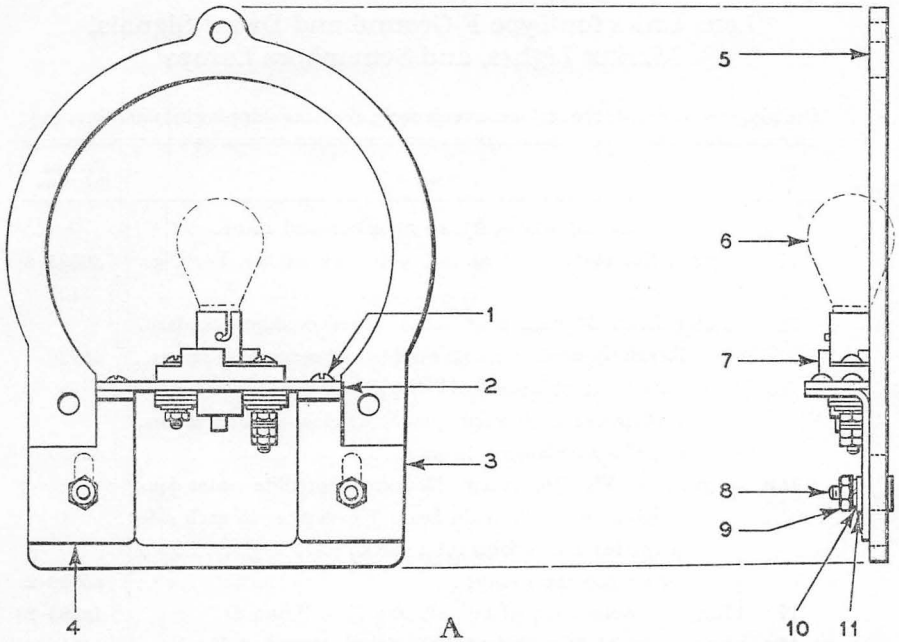

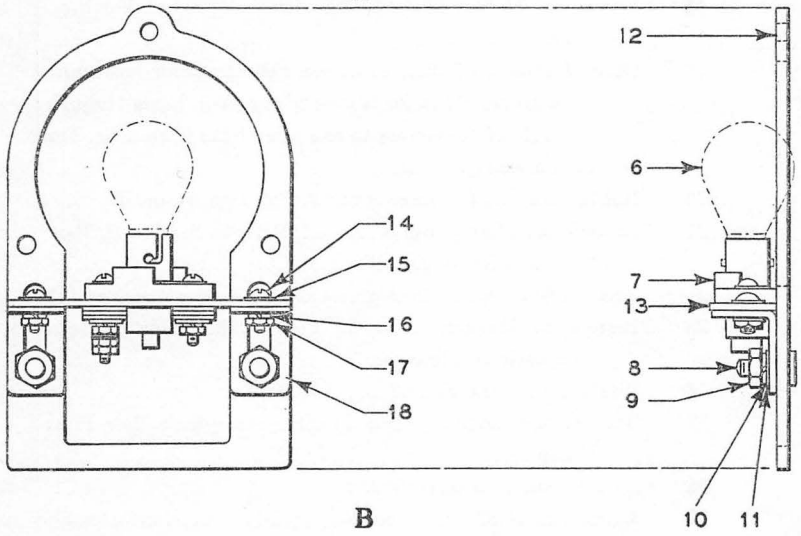

Color-Light Signals
Change-over Rings

October 1944 GENERAL RAILWAY SIGNAL COMPANY

Color-Light Signals

Change-over Rings

Note: Lamps are not furnished with change-over rings. Refer to Section H, Part 39 and order separately.

Drawing references are shown for convenience in checking shipping lists and invoices.

Fig. No.	Name	Drawing Reference
	Order by plate, figure number and name	
A	Ring Complete, for color-light signals in service when single contact, candelabra bayonet base lamps are required instead of rebased lamps. For 8⅜″ dia. doublet lens units Figs. C and D, Plate H3001	53158–2
B	as above, except for 5″ dia. doublet lens units Figs. C and D, Plate H 3003	53158–3
1	Screw, No. 8-32 x ¼″ rd. hd., for fastening plate to brackets Figs. 3 and 4	2553–7
2	Plate, for mounting receptacle to brackets	45955–15
3	Bracket, left-hand, for mounting and adjusting receptacle. For Fig. A	49092–8
4	as above, except right-hand	49092–7
5	Ring, as shown, for Fig. A	43983–11
6	Incandescent Lamp, single contact, candelabra bayonet base. For Figs. A and B. Refer to Sec. H, Part 39 and order separate	34866
7	Receptacle Complete, for single contact candelabra bayonet base lamp. For Figs A and B	53058 Gr. 3
8	Screw, No. 14-24 x ¾″ rd. hd., for fastening brackets Figs. 3, 4 and 18 to ring	3034–3
9	Nut, No. 14-24 x $\frac{3}{16}$″ th. hex., for screw Fig. 8	42839
10	Lock Washer, for screw Fig. 8	0510
11	Washer, for screw Fig. 8	1225–1
12	Ring, as shown, for Fig. B	43983–5
13	Plate, for mounting receptacle to brackets	45955–14
14	Screw, No. 10-32 x ½″ rd. hd., for fastening plate to brackets Fig. 18	2438–1
15	Washer, for screw Fig. 14	40791
16	Lock Washer, for screw Fig. 14	0622
17	Nut, No. 10-32 x ⅛″ th. hex., for screw Fig. 14	577–2
18	Bracket, for mounting and adjusting receptacle. For Fig. B	49092–6

Memoranda

Section H, Part 31

Position Light Signals
Type B High Signals
Type C Dwarf Signals

Copyright 1925, General Railway Signal Company

Position Light Signal

Foreword and General Order Information

Type B, High Signal

A general description of the Type B Position Light Signal is given in our Bulletin No. 144, pages 52 to 60, and the details of construction are shown in the following plates, particularly Plates H3107 and H3109.

The aspects and indications for the position light signal are given on page 312 and are referred to in giving order references for various combinations of Type B Signals.

Signal Heights

Signals are shown in heights generally in use, but when specified, signals will be furnished in any heights desired.

Relay Cases

Signals are shown without relay cases, but when specified, will be furnished with any combination of relay cases desired. See Section E Part 9 for relay cases.

Transformers

Transformers for providing current of the proper voltage to lamps are shown in Volume 4 on Plates P1001, P0102, P0103 and P0105.

Lamps

Lamps regularly supplied for the Type B Position Light Signal are of the medium bayonet base, concentrated tungsten single filament type, rebased for a single contact, 2 pin receptacle. Lamps are rated at 12 volts, 9 watts and are used for either primary battery or alternating-current operation. See Plate H3011 for lamps of other ratings.

Marker Lights

The marker light consists of one of the regular lighting units as used in the Type B position light signal with provision for mounting to signal mast. Marker lights are shown dotted on signals complete only to illustrate method of mounting and must be specified separately when required.

Bridge Signal Supports and Fixtures

Channel irons and fixtures for attaching signals to bridges can be furnished when we are provided with detail drawings of bridges but are not included with Type B Bridge Signals as listed.

Conduit Connection

Unless otherwise specified, Type B Signals will be furnished with flexible conduit connection between junction box and mast. When specified, signals will be furnished less conduit connection or with loricated conduit connections.

(Continued on following page)

Position Light Signal

Foreword and General Order Information

Type C, Dwarf Signals

The Type C, Position Light Dwarf Signal is designed for short range, no attempt being made to secure accurate methods of focusing. The signal is shown on Plate H3105 and is furnished with or without a small relay case which is bolted on as shown. To improve the close up indication, it is advisable to tilt the signal backward 5° or 10° on the foundation.

The lamps regularly supplied for the Type C signal are of the single contact, miniature candelabra bayonet base or automobile type, having a single concentrated filament and are rated at 6–8 volts, 16.8 watts. See Plate H3011, Figs. G and G1 for lamps and order separately.

Position-Light Signals		
Aspects High Signal		Indications
1		Proceed
2		Proceed prepared to stop at next signal
3		Proceed with caution prepared to stop short of train or obstruction
4		Stop
5		Stop and proceed as per rule
6	a b	Proceed prepared to pass next signal at medium speed
7	a b	Proceed at medium speed
8	a b	Proceed at restricted speed prepared to stop at next signal
9	a b	Proceed at low speed prepared to stop short of train or obstruction
Dwarf Signal		
10		Proceed at low speed
11		Proceed at low speed prepared to stop
12		Proceed at low speed prepared to stop short of train or obstruction
13		Stop
14		Take Siding

Memoranda

GENERAL RAILWAY SIGNAL COMPANY October 1925

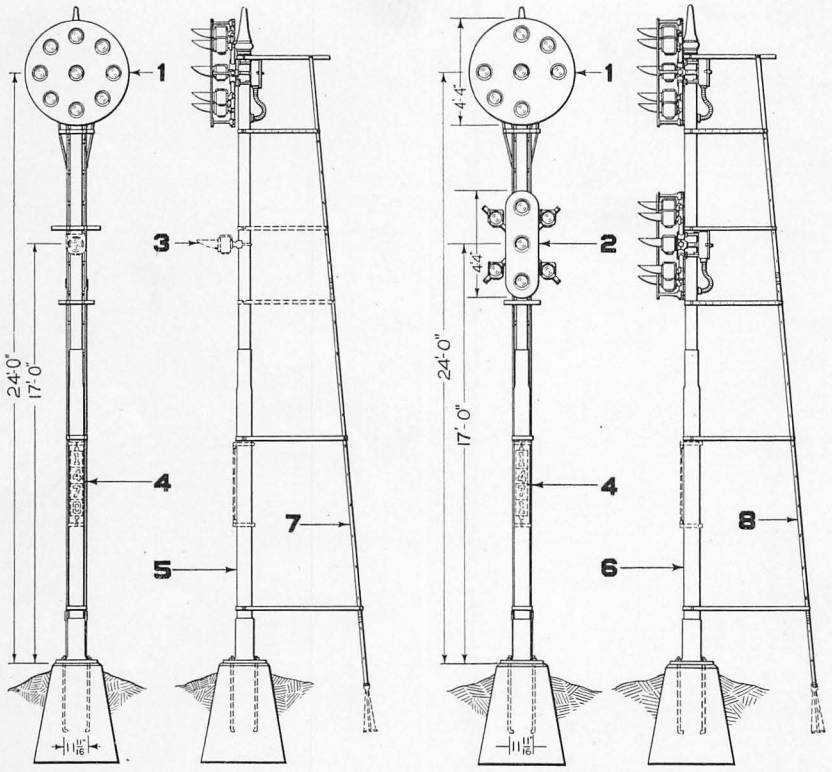

A- SINGLE UNIT SIGNAL

B- TWO UNIT SIGNAL

Type B Position Light Ground Signals

October 1925 GENERAL RAILWAY SIGNAL COMPANY

Type B Position Light Ground Signals

One and Two Unit

Note: See foreword and order information, page 310, at the beginning of this part.

Drawing references are shown for convenience in checking shipping lists and invoices.

Fig. No.	Name	Drawing Reference
	Order by plate, figure number and name	
A	Type B Single Unit Position Light Ground Signal Complete, four position, 0°, 45°, and 90° upper right hand quadrant, 45° lower right hand quadrant, for giving indications as shown on Page 312, Figs. 1, 2, 3 and 4. Includes mast and ladder, but without marker light, number plate and anchor bolts	49100
A1	as above, except three position signal; positions 0°, 45°, and 90° upper right hand quadrant, for giving indications as shown on Page 312, Figs, 1, 2 and 4	49100
A2	same as Fig. A, except two position signal; positions 0° and 45° upper right hand quadrant for giving indications as shown on Page 312, Figs. 2 and 4	49100
B	Type B Two Unit Position Light Ground Signal Complete, upper unit, three positions, namely, 0°, 45° and 90° upper right hand quadrant for giving indications as shown on Page 312, Figs. 1, 6a and 7a; lower unit, three positions, namely, 45° and 90° upper right hand quadrant and 45° lower right hand quadrant, for giving indications as shown on Page 312, Figs. 6b, 8b and 9b. Includes mast and ladder, but without number plate and anchor bolts	49100–1
B1	as above, except lower unit has two positions, namely, 45° upper right hand quadrant, 45° lower right hand quadrant, for giving indications as shown on Page 312, Figs. 8b and 9b	49100–1
1	Type B Position Light Signal Unit Complete. See Plate H3107, Fig. A	48870–2
2	Type B Position Light Signal Unit Complete. See Plate H3107, Fig. B	48870–3
3	Marker Light Complete. See Plate H3109, Fig. A2 for order reference	49101

GENERAL RAILWAY SIGNAL COMPANY October 1925

Type B Position Light Ground Signals

One and Two Unit

Drawing references are shown for convenience in checking shipping lists and invoices.

Fig. No.	Name	Drawing Reference
	Order by plate, figure number and name	
4	Number Plate. See Plate H1715 for order reference.....	
5	Mast, 26′–8″ long, to top of pinnacle, of 5″ and 6″ pipe, drilled for use without marker light. Has A. R. A. pinnacle and base.....	49181–2
5a	as above, except drilled for marker light.....	49181–2
6	Mast, 26′–8″ long, to top of pinnacle, of 5″ and 6″ pipe, drilled for Fig. B. Has A. R. A. pinnacle and base.....	49181–2
7	Ladder Complete, for use in Fig. A without marker light, includes hand rails, platform, stays, clamps and bolts. Does not include foundation.....	
8	Ladder Complete, for Fig. B, includes hand rails, platforms, stays, clamps and bolts. Does not include foundation....	310–15

Memoranda

PLATE H3103

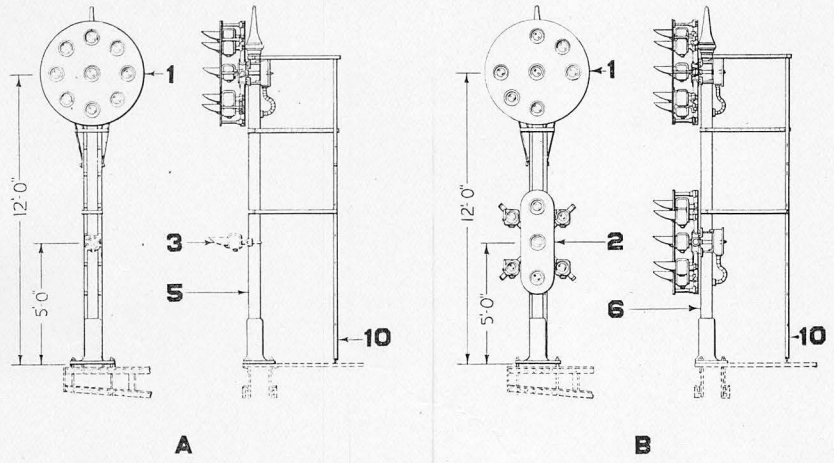

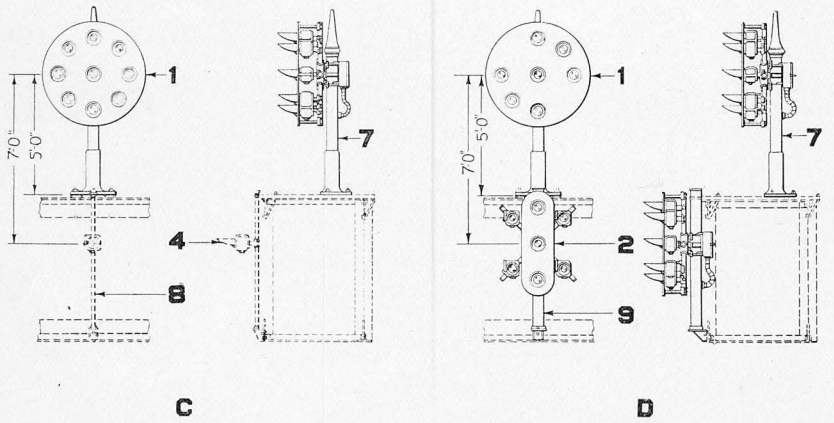

Type B Position Light Bridge Signals

Type B One and Two Unit Position Light Bracket Post and Bridge Signals

Note: See foreword and order information, page 310, at the beginning of this part.

Drawing references are shown for convenience in checking shipping lists and invoices.

Fig. No.	Name	Drawing Reference
	Order by plate, figure number and name	
A	Type B Single Unit Position Light Bracket or Bridge Signal Complete, four positions, 0°, 45° and 90° upper right hand quadrant, 45° lower right hand quadrant, for giving indications as shown on Page 312, Figs. 1, 2, 3 and 4. Includes mast and ladder, but without marker light and anchor blots.	49100–2
A1	as above, except three position signal; positions, 0°, 45° and 90° upper right hand quadrant for giving indications as shown on Page 312, Figs. 1, 2 and 4	49100–2
A2	same as Fig. A, except two position signal; positions, 0° and 45° upper right hand quadrant for giving indications as shown on Page 312, Figs. 2 and 4	49100–2
B	Type B Two Unit Position Light Bracket or Bridge Signal Complete, upper unit, three positions, namely, 0°, 45° and 90° upper right hand quadrant for giving indications as shown on Page 312, Figs. 1, 6a and 7a; lower unit, three positions, namely, 45° and 90° upper right hand quadrant, 45° lower right hand quadrant, for giving indications as shown on Page 312, Figs. 6b, 8b and 9b. Includes mast and ladder but without anchor bolts	49100–3
B1	as above, except lower unit has two positions, namely, 45° upper right hand quadrant, 45° lower right hand quadrant, for giving indications as shown on Page 312, Figs. 8b and 9b.	49100–3
C	Type B Single Unit Position Light Bridge Signal Complete, four positions, namely, 0°, 45° and 90° upper right hand quadrant, 45° lower right hand equadrant, for giving indications as shown on Page 312, Figs. 1, 2, 3 and 4. Includes mast without anchor bolts. Marker light and mounting for same must be ordered separately	49100–4

(Continued on following page)

GENERAL RAILWAY SIGNAL COMPANY October 1925

Type B One and Two Unit Position Light Bracket Post and Bridge Signals

Drawing references are shown for convenience in checking shipping lists and invoices.

Fig. No.	Name	Drawing Reference
	Order by plate, figure number and name	
C1	as above, except three position signal; positions 0°, 45° and 90° upper right hand quadrant for giving indications as shown on Page 312, Figs. 1, 2 and 4	49100–4
C2	same as Fig. C, except two position signal; positions 0° and 45° upper right hand quadrant for giving indications as shown on Page 312, Figs. 2 and 4	49100–4
D	Type B Two Unit Position Light Bridge Signal Complete, upper unit, three positions, namely, 0°, 45° and 90° upper right quadrant for giving indications as shown on Page 312, Figs. 1, 6a and 7a; lower unit, three positions, namely, 45° and 90° upper right hand quadrant, 45° lower right hand quadrant for giving indications as shown on Page 312, Figs. 6b, 8b and 9b. Includes mast complete, Fig. 7 but without mounting bolts for attaching to deck, and mast, Fig. 9 with U bolt and mounting bracket but without hook bolts. Channel iron and other bridge fittings can be furnished when we are provided with detail drawings of bridge but must be specified separately	49100–5
D1	as above, except lower unit has two positions, namely, 45° upper right hand quadrant, 45° lower right hand quadrant, for giving indications as shown on Page 312, Figs. 8b and 9b.	49100–5
1	Type B Position Light Signal Unit Complete. See Plate H3107, Fig. A	48870–2
2	Type B Position Light Signal Unit Complete. See Plate H3107, Fig. B	48870–3
3	Marker Light Complete, for mounting to 5″ mast. See Plate H3109, Fig. A2 for order reference	49101
4	Marker Light Complete, for mounting to 1¼″ pipe. See Plate H3109, Fig. A for order reference	49101
5	Mast, 14′–8″ long to top of pinnacle, of 5″ pipe, for use without marker light,—has A. R. A. pinnacle and base for bridge or bracket post mounting	49181–3

(Continued on following page)

October 1925 GENERAL RAILWAY SIGNAL COMPANY

Type B One and Two Unit Position Light Bracket Post and Bridge Signals

Drawing references are shown for convenience in checking shipping lists and invoices.

Fig. No.	Name	Drawing Reference
	Order by plate, figure number and name	
5a	as above, except drilled for marker light	49181–3
6	Mast, 14′–8″ long to top of pinnacle, of 5″ pipe drilled for Fig. B,—has A. R. A. pinnacle and base for bridge or bracket post mounting	49181–3
7	Mast, 7′–8″ long to top of pinnacle, of 5″ pipe,—has A. R. A. pinnacle and base for bridge mounting	49184–2
8	1¼″ W. I. Pipe, with bracket and U bolt for mounting marker light as shown. Specify length	49182–2
9	Mast Complete, with cap, U bolt and bracket for mounting lower signal unit to bridge. Specify length	49182–1
10	Ladder Complete, for Figs. A and B	310–14

PLATE H3105

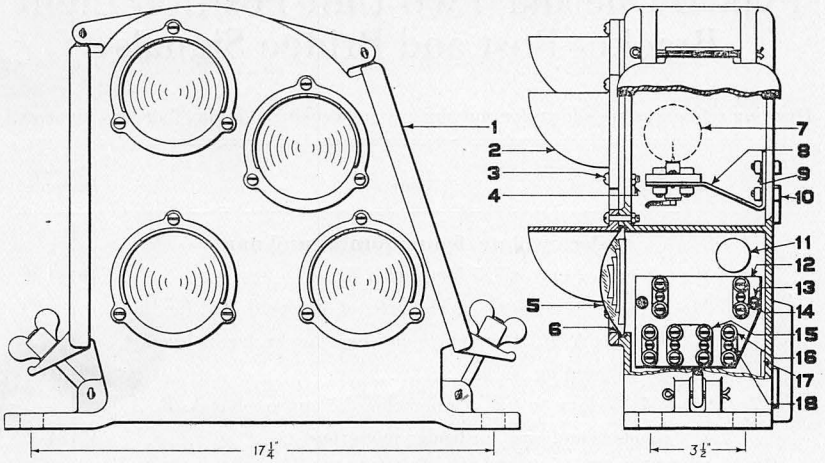

A

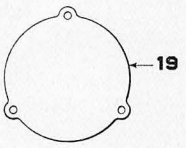

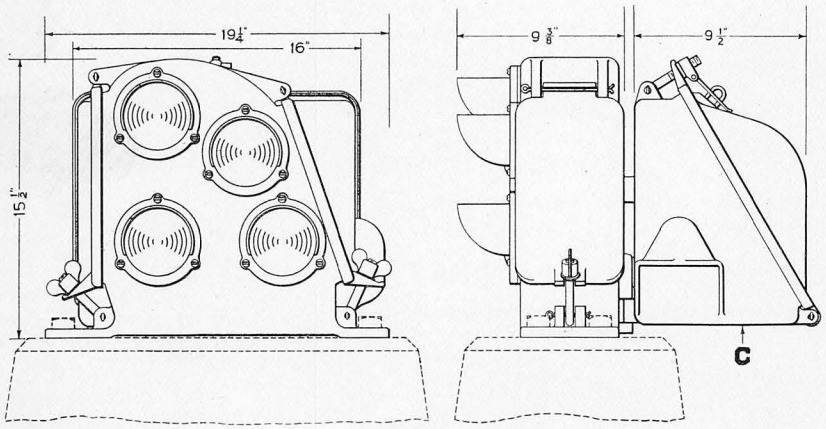

B

Type C Position Light Dwarf Signal

Type C Position Light Dwarf Signal

Note: See foreword and order information, page 310, at the beginning of this part.

Drawing references are shown for convenience in checking shipping lists and invoices.

Fig. No.	Name	Drawing Reference
	Order by plate, figure number and name	
A	Type C Position Light Dwarf Signal Complete, three position, 0°, 45° and 90° upper right quadrant, for giving indications as shown on Page 312, Figs. 10, 11 and 13	48720–1
A1	as above, except two position signal; positions 0° and 45° upper right hand quadrant, for giving indications as shown on Page 312, Figs. 11 and 13	48720–1
A2	same as Fig. A, except wired for three positions, 0° and 45° upper right hand quadrant and 45° lower right hand quadrant, for giving indications as shown on page 312, Figs. 11, 12 and 13	
B	Type C Position Light Dwarf Signal Complete with Relay Box as shown,—signal has three positions, namely, 0°, 45° and 90° upper right hand quadrant, for giving indications as shown on Page 312, Figs. 10, 11 and 13. Foundation bolts are not included	
B1	as above, except two position signal, positions 0° and 45° upper right hand quadrant, for giving indications as shown on Page 312, Figs. 11 and 13	
B2	same as Fig. B except wired for three positions, 0° and 45° upper right hand quadrant and 45° lower right hand quadrant, for giving indications as shown on page 312, Figs. 11, 12 and 13	
C	Relay Box Complete, with terminal board and twelve terminal blocks, wire inlet connection and mounting bolts for attaching to dwarf signal case	48730
1	Case Complete, for use without relay box. Includes covers, cotters, bolts and wing nuts	48740
1a	as above, except drilled for use with relay box	48740
2	Hood, for lens	35886–2

(Continued on following page)

GENERAL RAILWAY SIGNAL COMPANY October 1925

Type C Position Light Dwarf Signal

Drawing references are shown for convenience in checking shipping lists and invoices.

Fig. No.	Name	Drawing Reference
	Order by plate, figure number and name	
3	Screw, No. 10—32x1¼″ rd. hd. for fastening hood, Fig. 2 and cap, Fig. 19 to case	7634
4	Nut, No. 10—32 hex. for screw, Fig. 3	6471
5	Lens, 4″ in diameter, standard optical clear, convex surface frosted, 2¼″ focus	47586–1
6	Gasket, lamp wick, 1/16″x½″, length as specified	
7	Electric Lamp Bulb, see Plate H3011, Fig. G	
8	Bracket Complete, with receptacle for use on right hand side	34863
8a	as above, except for use on left hand side	34863
9	Washer, ¼″ lock, for bolt, Fig. 10	0510
10	Bolt, ¼″—20x¾″ sq. hd., with sq. nut, for fastening brackets, Figs. 8 and 8a to case	0314
11	Plug, wood, for wire holes in case partitions	48729
12	Terminal Block, wood	48724
13	Washer, for screw, Fig. 14	15394
14	Screw, No. 10—32x⅞″ rd. hd. with hex. nut for fastening terminal block to case	
15	Connector Complete, four post, as shown	18643–7
16	Connector Complete, two post, as shown	18643–3
17	Plug, wood, for conduit hole in back of case	**48725**
18	Screw, wood, No. 8x½″ fl., hd., for fastening connectors to terminal board	0740
19	Cap, for covering lens opening	**48728**

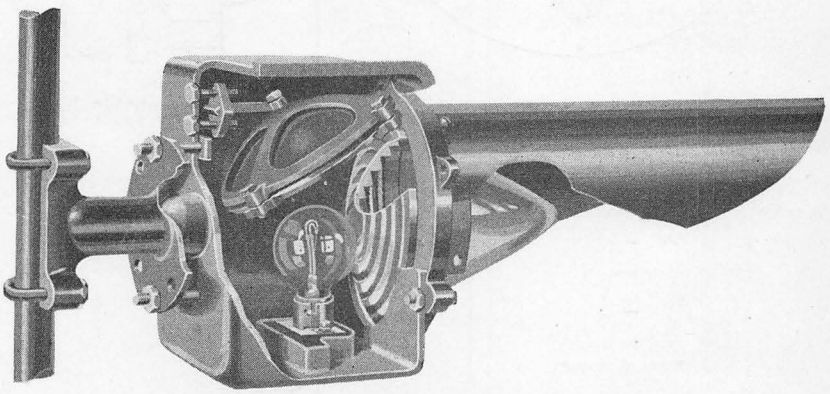

Lamp Unit for Type B Position Light Signals

PLATE H3107

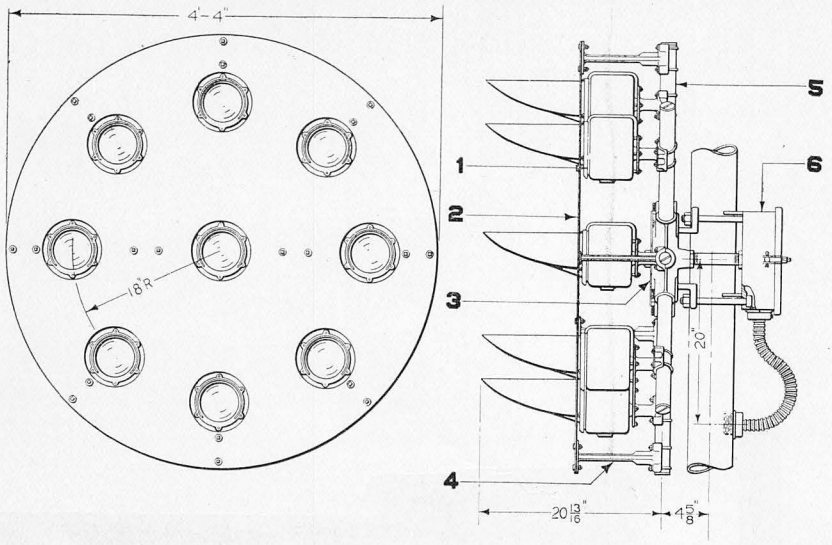

A-FOUR POSITION LIGHT SIGNAL UNIT. UPPER ARM

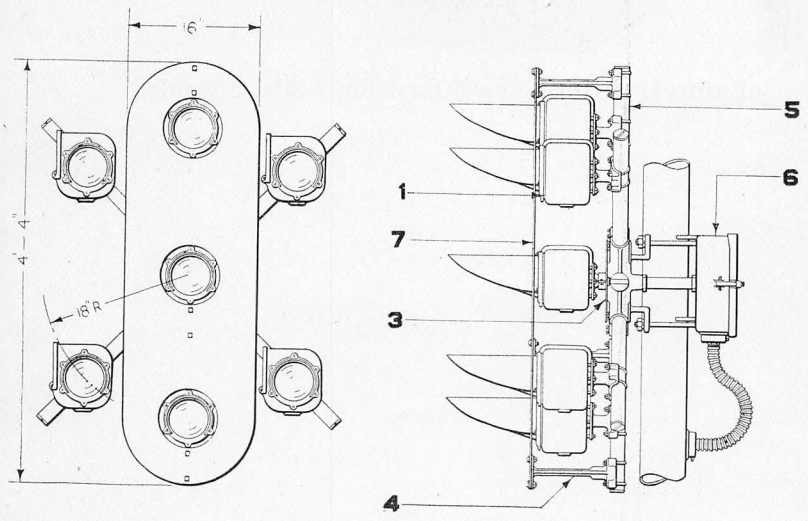

B-THREE POSITION LIGHT SIGNAL UNIT. LOWER ARM

Type B Position Light Signal Units

October 1925 GENERAL RAILWAY SIGNAL COMPANY

Type B Position Light High Signal Units

Drawing references are shown for convenience in checking shipping lists and invoices.

Fig. No.	Name	Drawing Reference
	Order by plate, figure number and name	
A	Type B, Four Position, Light Signal Unit Complete, as shown for mounting to 5″ pipe. Positions 0°, 45° and 90° upper right hand quadrant, 45° lower right hand quadrant for giving indications as shown on Page 312, Figs. 1, 2, 3 and 4	
A1	as above, except three position light signal unit, positions 0°, 45° and 90° upper right hand quadrant for giving indications as shown on Page 312, Figs. 1, 2 and 4	
A2	same as Fig. A, except three position light signal unit; positions 45° and 90° upper right hand quadrant, 45° lower right hand quadrant for giving indications as shown on page 312, Figs. 1, 2 and 3	
A3	same as Fig. A, except three position light signal unit, positions 0° and 90° upper right hand quadrant 45° lower right hand quadrant for giving indications as shown on Page 312, Figs. 1, 3 and 4	
A4	same as Fig. A, except three position light signal unit, positions 0° and 45° upper right hand quadrant, 45° lower right hand quadrant for giving indications as shown on Page 312, Figs. 2, 3 and 4	
A5	same as Fig. A, except two position light signal unit; positions 0° and 45° upper right hand quadrant for giving indications as shown on Page 312, Figs. 2 and 4	
A6	same as Fig. A, except two position light signal unit positions 0° and 45° lower right hand quadrant for giving indications as shown on Page 312, Figs. 3 and 4	
A7	same as Fig. A, except two position light signal unit; positions 90° upper right hand quadrant and 45° lower right hand quadrant for giving indications as shown on Page 312, Figs. 1 and 3	
A8	same as Fig. A, except two position light signal unit; positions 0° and 90° upper right hand quadrant for giving indications as shown on Page 312, Figs. 1 and 4	

(Continued on following page)

GENERAL RAILWAY SIGNAL COMPANY October 1925

Type B Position Light High Signal Units

Drawing references are shown for convenience in checking shipping lists and invoices.

Fig. No.	Name	Drawing Reference
	Order by plate, figure number and name	
A9	same as Fig. A, except two position light signal unit; positions 45° upper right hand quadrant and 45° lower right hand quadrant for giving indications as shown on Page 312, Figs. 2 and 3	
A10	same as Fig. A, except one position light signal unit; position 0° for giving indication as shown on Page 312, Fig. 4	
B	Type B Three Position Light Signal Unit Complete, as shown for mounting to 5″ pipe. Positions, 45° and 90° upper right hand quadrant, 45° lower right hand quadrant for giving indications as shown on Page 312, Figs. 6b, 8b and 9b	
B1	as above, except two position light signal unit; positions, 45° and 90° upper right hand quadrant for giving indications as shown on Page 312, Figs. 6b and 8b	
B2	same as Fig. B, except two position light signal unit; positions, 90° upper right hand quadrant, 45° lower right hand quadrant for giving indications as shown on Page 312, Figs. 6b and 9b	
B3	same as Fig. B, except one position light signal unit position, 90° for giving indication as shown on Page 312, Fig. 6b	
B4	same as Fig. B, except one position light signal unit; position, 45° lower right quadrant for giving indication as shown on Page 312, Fig. 9b	
B5	same as Fig. B, except one position light signal unit; position, 45° upper right hand quadrant for giving indication as shown on Page 312, Fig. 8b	
1	Light Unit Complete, as shown with mounting bracket and U bolts for mounting to 1¼″ conduit. See Plate H3109, Fig. A, for details	49101
2	Background, for top signal unit, 4′–4″ in diameter as shown	49166–2
3	Hub. See Plate H3109, Fig. B	49148
4	Strut Complete, with bolts, U bolts, nuts and washers for mounting background to 1¼″ conduit	49153

(Continued on following page)

October 1925 GENERAL RAILWAY SIGNAL COMPANY

Type B Position Light High Signal Units

Drawing references are shown for convenience in checking shipping lists and invoices.

Fig. No.	Name	Drawing Reference
	Order by plate, figure number and name	
5	Pipe, 1¼″, with plug for one end. Specify position in signal...	
6	Junction Box Complete, with flexible conduit and terminals. See Plate H3109, Fig. E for details.....	
7	Background, for lower signal unit, 16″ wide by 4′–4″ high, as shown.....	49162–8

PLATE H3109

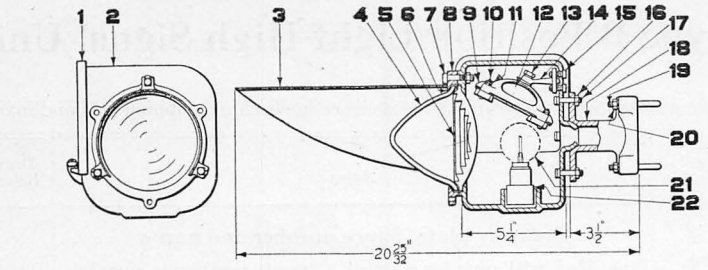

A

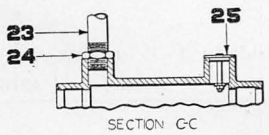

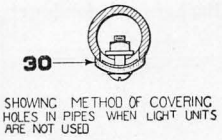

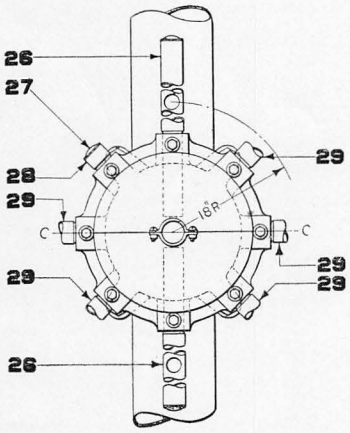

B

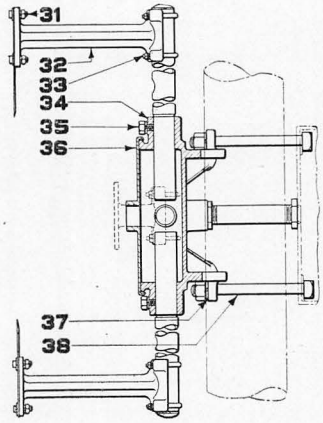

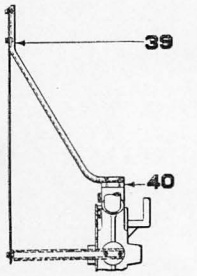

C

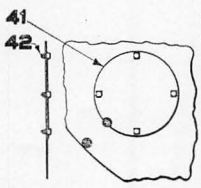

D

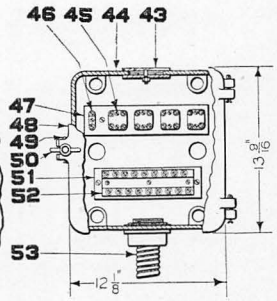

E

Type B Position Light Signal Details

October 1925 GENERAL RAILWAY SIGNAL COMPANY

Type B Position Light High Signals

Details

Note: This plate is included principally for convenience in ordering repair parts and to show methods of construction.

Drawing references are shown for convenience in checking shipping lists and invoices.

Fig. No.	Name	Drawing Reference
	Order by plate, figure number and name	
A	Type B Light Unit Complete, as shown, 5⅜″ diameter, clear, inverted, half toric, 2¼″ focus lens with 5⅜″ diameter cover glass but without lamp bulb	49101
A1	as above, except lamp bulb is included	
A2	same as Fig. A except light unit is provided with bracket and U bolt for mounting to 4″, 5″ or 6″ pipe for use as marker light. Specify size of pipe	
A3	as above, except lamp bulb is included	
B	Hub Complete, as shown with pipe, conduit and bolts for mounting junction box. Specify number of pieces of 1¼″ pipe, plugs, etc., Figs. 25, 26, 27, 28 and 29, or see page 312 and give figure number of aspect for which hub is to be used	49147
C	Support Complete, with bolts, nuts, washers, screws and pipe plug for supporting rim of background where pipe is not required for light unit	
D	Disc Complete, with bolts, nuts and washers for covering opening in background where light unit is not used	
E	Juntion Box Complete, as shown to fit 4″, 5″ or 6″ pipe	49132–1
E1	as above, except without flexible conduit connection, Fig. 53.	49132–1
E2	same as Fig. E except with 2″ nipples and a 2″ L. W. condulet in place of flexible conduit connection, Fig. 53	49132–1
1	Cover, for lamp case	49110–1
2	Lamp Case	49126
3	Hood Complete	49127
4	Cover Glass, 5⅜″ in diameter	47587
5	Lens, 5⅜″ in diameter, clear, inverted, half-toric 2¼″ focus	47585–1
6	Gasket, lamp wick, 1/16″x⅝″x18″ long, for use between cover glass, lens and bezel ring	

(Continued on following page)

GENERAL RAILWAY SIGNAL COMPANY October 1925

Type B Position Light High Signals

Details

Drawing references are shown for convenience in checking shipping lists and invoices.

Fig. No.	Name	Drawing Reference
	Order by plate, figure number and name	
7	Bolt, ¼″—20x1¼″, sq. hd. with hex. nut	
8	Bezel Ring	49111–2
9	Retainer for reflector	49113
10	Screw, No. 6—32x1″ rd. hd.	50593–1
11	Nut, No. 6—32 square	0850–2
12	Reflector, spherical, silvered, 4½″ diameter, 2¾″ outside radius of curvature	47584
13	Tap Bolt, ¼″—20x½″ hex. hd., with lock washer	
14	Bracket, as shown	49115–1
15	Tap Bolt, ¼″—20x¾″ sq. hd	49121–1
16	Nut, ¼″—20 hex.	49131
17	Bolt, ¼″—20x1¼″ sq. hd	05–1
18	Bracket, for supporting lamp case from 1¼″ pipe	49128
18a	as above, except for supporting lamp case from 4″, 5″ or 6″ pipe	49118
19	U Bolt, for 1¼″ pipe	49119
19a	U Bolt, for 4″ pipe	5183
19b	U Bolt, for 5″ pipe	5184
19c	U Bolt, for 6″ pipe	5185
20	Nut, ¼″—20 for U bolt, Fig. 19	
21	Electric Lamp Bulb. See Plate H3011, Fig. F	47438–1
22	Lamp Receptacle Complete, single contact, 2 pin for lamp, Fig. 21	49102
23	Nipple, 1″x8″, of loricated conduit for connection between junction box and hub	49159
24	Nut, T. & B. 1″, 2 required for nipple, Fig. 23	
25	Plug Complete for conduit hole in hub, includes screw, nut and washer	
26	Pipe, W. I., 1¼″x24 9/16″, with one hole for use in mounting vertical and center light units	49151
27	Plug, C. I., for ends of pipe	49117
28	Pipe, W. I., 1¼″x3¼″ for use where no light unit is required	49152–1

(Continued on following page)

Type B Position Light High Signal

Details

Drawing references are shown for convenience in checking shipping lists and invoices.

Fig. No.	Name	Drawing Reference
	Order by plate, figure number and name	
29	Pipe, W. I., 1¼″x21″, with 1 hole, for use in mounting light unit	49151–1
30	Plug Complete, with washers, screws, etc., for covering holes in pipe when light unit is not used	
31	Bolt, ¼″—20x1″ sq. hd. with hex. nut and washers for fastening background to strut	
32	Strut, cast iron, used as support for rim of background	49153
33	U Bolt, ¼″ with ¼″—20 hex. nut and lock washer for fastening strut to 1¼″ pipe	
34	Hub, cast iron, used as support for 1¼″ pipe	49148
35	Cap Screw, ½″ hex. hd. with lock washer used for holding 1¼″ pipe in hub	
36	Cover Complete for hub	
37	Lock Washer, ¾″	029
38	Bolt, ¾″—10x7½″ sq. hd. with sq. nut for fastening hub to junction box	
39	Support, channel iron, with bolts, screws and washers for attaching to background and plug, Fig. 40	
40	Plug, for use with support, Fig. 39	51476–1
41	Disc, for covering opening in background where light unit is not used	39719–1
42	Bolt, ¼″—20x½″ sq. hd., sq. nut with lock washer for fastening disc. Fig. 41 to background	
43	Cover Complete, with screw for covering 2″ conduit opening in junction box	
44	Case only, for junction box	49133
45	Connector Complete, with screws for mounting to terminal board as shown	18643–7
46	Connector Complete, with screw for mounting to terminal board as shown	18643–3
47	Terminal Board, with screws for mounting to case	49135–2
48	Cover, for case	49134

(Continued on following page)

GENERAL RAILWAY SIGNAL COMPANY October 1925

Type B Position Light High Signals

Details

Drawing references are shown for convenience in checking shipping lists and invoices.

Fig. No.	Name	Drawing Reference
	Order by plate, figure number and name	
49	Cotter Pin, ¼″x2¼″	0693
50	Thumb Nut	6945–1
51	Terminal Board, with screws for mounting to case as shown	49135–1
52	Bar Complete, as shown, with screws for mounting to terminal board	49875–1
53	Flexible Conduit Connection Complete, 2″ with couplings for attaching to junction box and pole	
53a	Condulet Complete, 2″ L. W. with nipples for junction box and pole for use in place of flexible conduit above	

Section H, Part 32

Type W
Color-Light Signals

Copyright 1941, General Railway Signal Company
Printed in U. S. A.

PLATE H3201

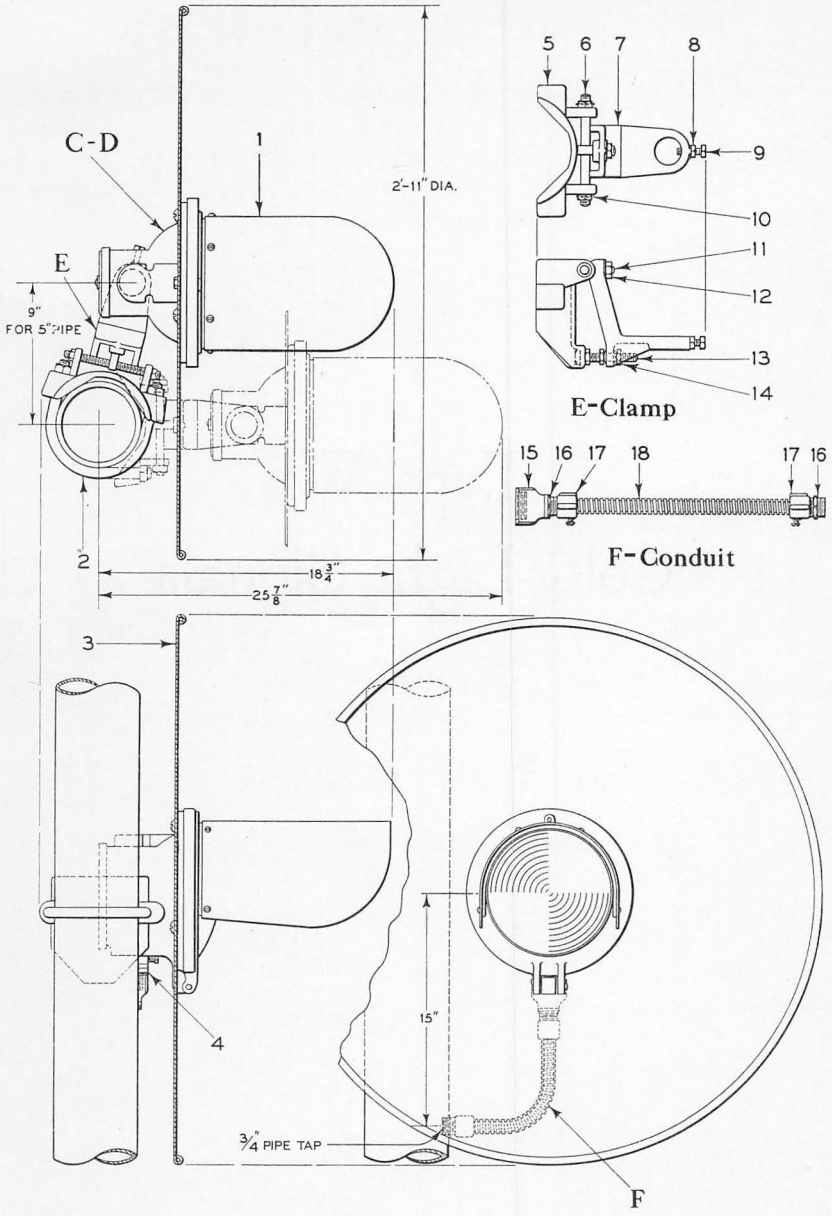

A-With Reflector And Roundel

B-With Doublet Lens

Type W Marker Lights and Fixed Arms

January 1941 GENERAL RAILWAY SIGNAL COMPANY

Type W Marker Lights and Fixed Arms

Note: Lamp is not included with signal complete, and must be ordered separately, see Plate H3221, Fig. 51.

These units are shown mounted on side of pole, however, they may be mounted directly in front of pole as shown by dotted lines, if desired, using the same mounting brackets. The vertical adjustment is then made by screws and nuts Figs. 13 and 14.

Drawing references are shown for convenience in checking shipping lists and invoices.

Fig. No.	Name	Drawing Reference
	Order by plate, figure number and name	
A	Type W Marker Light Complete, for mounting to 4″, 5″ or 6″ pipe, signal is equipped with reflector and an 8⅜″ dia. red convex roundel as shown on Plate H3221, Fig. B. **Order must specify whether or not background is required**	53125
A1	as above, except with lunar white roundel	53125
A2	same as Fig. A, except with green roundel	53125
A3	same as Fig. A, except with purple roundel	53125
A4	same as Fig. A, except with yellow roundel	53125
A5	same as Fig. A, except with red, 30 degree spredlite roundel which gives a spread of 15 degrees on each side of the beam axis or a total spread of 30 degrees. (This combination materially reduces the range of the signal and is used on severe curves only)	53125
B	Type W Marker Light Complete, for mounting to 4″, 5″ or 6″ pipe, signal is equipped with 5½″ dia., inner red lens and an 8⅜″ dia., 4″ focus, outer hot-spot lens as shown on Plate H3221, Fig. A. **Order must specify whether or not background is required**	53125
B1	as above, except inner lens is lunar white	53125
B2	same as Fig. B, except inner lens is green	53125
B3	same as Fig. B, except inner lens is purple	53125
B4	same as Fig. B, except inner lens is yellow	53125
C	Type W Light Unit Complete, with reflector and convex roundel For details and order references see Plate H3221, Fig. B	
D	Type W Light Unit Complete, with doublet lenses. For details and order references see Plate H3221, Fig. A	
E	Clamp Complete, for mounting signal unit to 4″, 5″ or 6″ pipe	53126 Gr. 1

(Continued on following page)

PLATE H3201

Type W Marker Lights and Fixed Arms

Drawing references are shown for convenience in checking shipping lists and invoices.

Fig. No.	Name	Drawing Reference
	Order by plate, figure number and name	
F	Conduit Complete, for signal unit	41659 Gr. 4
1	Hood, as shown, for light unit	49127–19
2	"U" Bolt Complete, 5/8"–11, with hex. nuts and lock washers, for fastening clamp Fig. E to 5" pipe	16209–4 Gr. 1
2a	as above, except for 4" pipe	16209–5 Gr. 1
2b	same as Fig. 2, except for 6" pipe	16209–6 Gr. 1
3	Background, 2'–11" dia., for light unit	49162–26
4	Lock Nut, for conduit	47154
5	Clamp only, for clamp Fig. E	53133
6	Stud, 1/2"–13 x 6 1/2", for eye-bolt Fig. 11	980–14
7	Arm only, for clamp Fig. E	53134
8	Nut, 3/8"–16 hex., for screw Fig. 9	37539
9	Set Screw, 3/8"–16 x 1 1/4" sq. hd., for locking signal unit to clamp	0897
10	Taper Pin, for locking nut to stud Fig. 6	18281
11	Eye-Bolt, 3/8"–16, for stud Fig. 6	39319–14
12	Nut, 1/2"–13 hex., for eye-bolt Fig. 11 and stud Fig. 6	1048
13	Bolt, 1/2"–13 x 3 1/2" sq. hd., for adjusting light unit	53137
14	Nut, 1/2"–13 hex., for bolt Fig. 13	12754
15	Reducer, 1 1/4"–11 1/2 to 3/4"–14, for conduit	1439–10
16	Lock Nut, 3/4"–14, for reducer and bushing Fig. 17	0826
17	Bushing Complete, includes screw for locking to conduit	43369 Gr. 1
18	Flexible Conduit, 3/4" x 16" lg.	43368–3

Memoranda

PLATE H3221

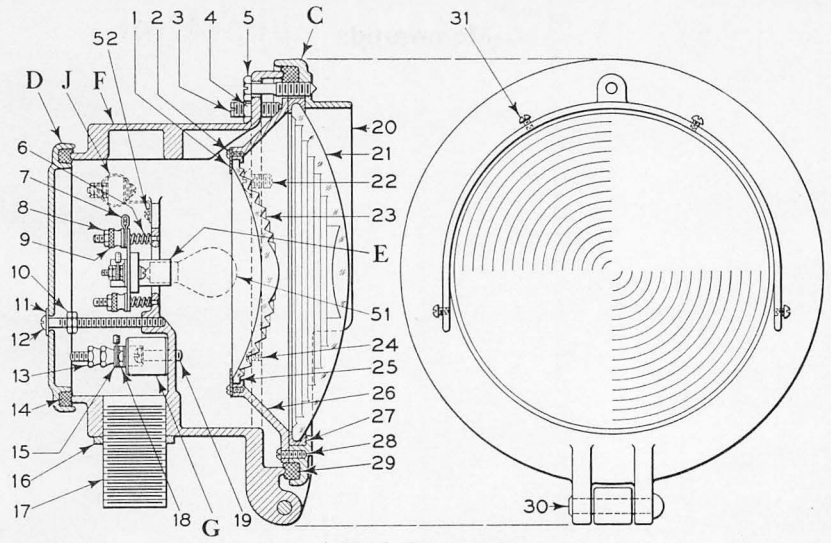

A-With Doublet Lens

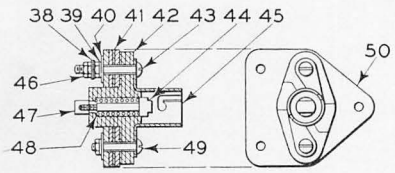

E-Receptacle

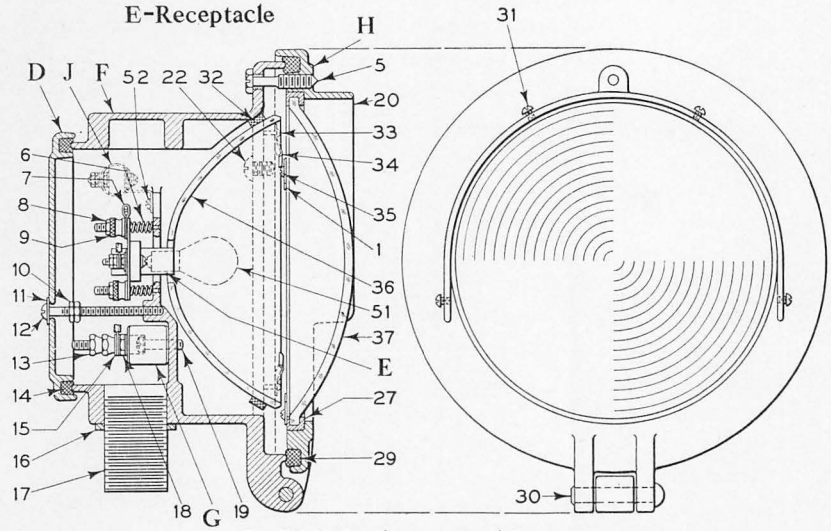

B-With Reflector And Roundel

Type W Color-Light Signal Units

Type W Color-Light Signal Units

Note: Lamp Fig. 51 is not included with signal unit and must be ordered separately.

Drawing references are shown for convenience in checking shipping lists and invoices.

Fig. No.	Name	Drawing Reference
	Order by plate, figure number and name	
A	Type W Color-Light Signal Unit Complete, equipped with 5½″ dia., inner lens (color as specified) and 8⅜″ dia., 4″ focus, outer hot-spot lens. Does not include resistor Fig. J	53127–1
A1	as above, except with 1 ohm resistor Fig. J	53127–4
A2	same as Fig. A1, except with 5 ohm resistor Fig. J1	53127–4
B	Type W Color-Light Signal Unit Complete, equipped with reflector and an 8⅜″ dia., convex roundel (color as specified). Does not include resistor Fig. J	53127
B1	as above, except with 1 ohm resistor Fig. J	53127–5
B2	same as Fig. B1, except with 5 ohm resistor Fig. J1	53127–5
C	Lens Unit Complete, with 5½″ dia. inner red lens and 8⅜″ dia. outer hot-spot lens. Includes the following parts: 4–1, 4–2, 1–20, 1–21, 1–23, 1–25, 1–26, 1–27, 4–28 and 1–29	36762–24 Gr. 2
C1	as above, except inner lens is lunar white, frosted	36762–24 Gr. 4
C2	same as Fig. C, except inner lens is lunar white, not frosted	36762–24 Gr. 16
C3	same as Fig. C, except inner lens is green	36762–24 Gr. 6
C4	same as Fig. C, except inner lens is purple	36762–24 Gr. 11
C5	same as Fig. C, except inner lens is yellow	36762–24 Gr. 13
D	Cover Complete, with gasket, for light units. Does not include bolts for mounting number plate	53130–2 Gr. 2
D1	as above, except with bolts for mounting number plate	53130–2 Gr. 1
E	Receptacle Unit Complete, for light units	53058 Gr. 1
F	Case Complete, includes studs for lamp receptacle, nut Fig. 16 and nipple Fig. 17	53131 Gr. 4
G	Terminal Block Complete, includes studs and bottom nut	46048–21 Gr. 6
H	Ring Complete, with 8⅜″ dia., red roundel. Includes the following parts: 2–1, 1–20, 1–27, 1–29, 2–35 and 1–37	53128 Gr. 1
H1	as above, except with lunar white roundel	53128
H2	same as Fig. H, except with green roundel	53128

(Continued on following page)

GENERAL RAILWAY SIGNAL COMPANY January 1941

Type W Color-Light Signal Units

Drawing references are shown for convenience in checking shipping lists and invoices.

Fig. No.	Name	Drawing Reference
	Order by plate, figure number and name	
H3	same as Fig. H, except with purple roundel	53128 Gr. 3
H4	same as Fig. H, except with red 30 degree spredlite roundel	53128 Gr. 4
J	Resistance Unit Complete, 1 ohm, 2.5 amps	55945-1 Gr. 4
J1	as above, except 5 ohms, 1 amp	55945-1 Gr. 5
1	Clip, for fastening inner lens in place	18547-15
2	Screw, No. 8-32 x 3/8" rd. hd., for clip Fig. 1	2553-10
3	Set Screw, 3/8"-16 x 1 1/2", for light unit	43341
4	Nut, 3/8"-16 x 3/16" th. hex., for screw Fig. 3	35519
5	Screw, 3/8"-16 x 1 9/16" hex. hd., for fastening lens unit to case	53141
6	Spring, for receptacle	786-137
7	Wire Clip, for receptacle	53114
8	Nut, No. 10-32 x 1/8" th. hex., for locking nut Fig. 9	40796
9	Knurled Nut, No. 10-32, for receptacle	13076-1
10	Nut, No. 14-24 x 3/16" th. hex., for screw Fig. 12	42839-1
11	Washer, for screw Fig. 12	45736-1
12	Screw, No. 14-24 x 3 3/8" rd. hd., for fastening cover to case	1411-20
13	Nut, No. 14-24 x 5/16" th. hex., for terminal posts	42843-1
14	Gasket, 10 3/8" lg., for cover	47436
15	Washer, for terminal posts	1225-2
16	Lock Nut, 1 1/4", for nipple	27060
17	Nipple, 1 1/4" x 2 1/2", for mounting light unit	48118
18	Nut, No. 14-24 x 3/16" th. hex., for terminal post	42839-5
19	Screw, No. 10-32 x 7/8" fil. hd., with lock washer, for mounting terminal block	12563-9 53029-3
20	Outer Bezel Ring, for light unit	53138
21	Outer Lens, clear, 8 3/8" dia., 4" focus, hot-spot	43987-12
22	Screw, 3/8"-16 x 1/2" rd. hd., for fastening background to signal unit	0396-4
23	Inner Lens, red, 5 1/2" dia., 1/2" focus	43988-2
23a	as above, except lunar white, frosted	43988-10
23b	same as Fig. 23, except lunar white, not frosted	43988-5

(Continued on following page)

Type W Color-Light Signal Units

Drawing references are shown for convenience in checking shipping lists and invoices.

Fig. No.	Name	Drawing Reference
	Order by plate, figure number and name	
23c	same as Fig. 23, except green	43988
23d	same as Fig. 23, except purple	43988–4
24	Screw, No. 8–32 x ¼″ rd. hd., with lock washer	2553–6 2534–1
25	Candle Wicking, 17–¼″ lg., for lens Fig. 23	0160
26	Inner Bezel Ring, for light unit	43983–38
27	Gasket, ⅛″–1″, for outer lens	13014–57
28	Screw, No. 8–32 x ½″ rd. hd., for fastening inner ring to outer ring	2553–14
29	Gasket, 2′–7″ lg., for case	43460
30	Rivet, ⅜″ x 2¼″ rd. hd., hinge for lens unit	26734
31	Screw, No. 10–32 x ¼″ rd. hd., for fastening hood to outer ring	2438–9
32	Gasket, ¼″, for reflector	13014–70
33	Screw, No. 8–32 x ⅜″ rd. hd., with lock washer, for clip Fig. 34	2553–11 43058
34	Clip, for fastening reflector in place	18547–19
35	Screw, No. 8–32 x ¼″ rd. hd., for clip Fig. 1	2553–7
36	Reflector, only for light unit Fig. B	53122–2
37	Roundel, red, 8–⅜″ dia., for light unit	46723–1
37a	as above, except lunar white	46723–5
37b	same as Fig. 37, except green	46723–2
37c	same as Fig. 37, except purple	46723–7
37d	same as Fig. 37, except yellow	46723–3
37e	same as Fig. 37, except red, 30 degree spredlite which gives a spread of 15 degrees on each side of the beam axis or a total spread of 30 degrees. (This lens materially reduces the range of the signal and is used on severe curves only)	53142
38	Washer, for nut Fig. 46	2534–1
39	Lock Washer, for nut Fig. 46	43058
40	Washer, for screws Figs. 43 and 49	1225–26
41	Washer, for screws Figs. 43 and 49	493–18

(Continued on following page)

GENERAL RAILWAY SIGNAL COMPANY January 1941

Type W Color-Light Signal Units

Drawing references are shown for convenience in checking shipping lists and invoices.

Fig. No.	Name	Drawing Reference
	Order by plate, figure number and name	
42	Block, only, for receptacle	53091-2
43	Screw, No. 8-32 x 1¼" rd. hd., for receptacle	2553-23
44	Plunger, for receptacle	53107-5
45	Receptacle, only	34864-13
46	Nut, No. 8-32 x ⅛" th. hex., for screws Figs. 43 and 49	3891-1
47	Terminal, for receptacle	53108
48	Spring, for plunger	786-64
49	Screw, No. 8-32 x ⅞" rd. hd., for receptacle	2553-21
50	Plate, for mounting receptacle	53104
51	Incandescent lamp, 2 pin, candelabra single contact bayonet base S-8 bulb, single filament, 1000 hour rating, 11.3 volts, 13.3 watts, recommended for operation on 10 volts	34866-32
51a	as above, except S-11 bulb, single filament, 1000 hour rating, 8 volts, 10 watts, recommended for operation on 7.2 volts	34866-43
51b	same as Fig. 51, except S-11 bulb, major and minor filaments in multiple, 1000 hour rating, 8 volts, 13+3.5 watts, recommended for operation on 7.2 volts	34866-37
51c	same as Fig. 51, except S-11 bulb, single filament, 1000 hour rating, 9 volts, 15.3 watts, recommended for operation on 8 volts	34866-34
51d	same as Fig. 51, except S-11 bulb, major and minor filaments in multiple, 1000 hour rating, 10 volts, 13+3.5 watts, recommended for operation on 9 volts	34866-60
51e	same as Fig. 51, except S-11 bulb, single filament, 1000 hour rating, 10 volts, 25 watts, recommended for operation on 9 volts	34866-47
51f	same as Fig. 51, except S-11 bulb, single filament, 2000 hour rating, 13.5 volts, 17 watts, recommended for operation on 12 volts	34866-25
51g	same as Fig. 51, except G-16½ bulb, single filament, 1000 hour rating, 115 volts, 25 watts, recommended for operation on 110 volts	34866-45

(Continued on following page)

Type W Color-Light Signal Units

Drawing references are shown for convenience in checking shipping lists and invoices.

Fig. No.	Name	Drawing Reference
	Order by plate, figure number and name	
51h	same as Fig. 51, except S-11 bulb, single filament, 1000 hour rating, 4 volts, 3 watts, recommended for operation on 4 volts....	34866–35
51j	same as Fig. 51, except S-11 bulb, single filament, 1000 hour rating, 8 volts, 5 watts, recommended for operation on 8 volts....	34866–55
51k	same as Fig. 51, except S-11 bulb, major and minor filaments in multiple, 1000 hour rating, 8 volts, 5+3.5 watts, recommended for operation on 8 volts.....	34866–58
51m	same as Fig. 51, except S-11 bulb, single filament, 1000 hour rating, 10 volts, 5 watts, recommended for operation on 10 volts..	34866–38
52	Screw, No. 8–32 x 3/8″ rd. hd., with lock washer, for mounting resistance unit.....	2553–11 53029–4

Memoranda

Section H, Part 34

Types MD and ME Color-Light Dwarf Signals

General Railway Signal Company
Printed in U. S. A.

Foreword and General Ordering Information

Types MD and ME signals are compactly built, self-contained units and provide highly satisfactory dwarf signal indications with a minimum of working parts and, accordingly, for a low original and maintenance cost. Being two-indication color-light signals, they are directly controllable by either a neutral or polar relay, the circuit for which may be in turn controlled by a lever in an interlocking machine or by some other method of selection. This combined with the fact that they are operable by circuits similar to and as commonly used for the control of solenoid, or other type, two-indication signals in all-electric interlockings, make them particularly desirable for use in replacement of such types of signals which have become obsolete, worn-out, or which require excessive maintenance and repairs, or which in any other way are not operating satisfactory.

For typical circuits see Bulletin 175.

Features of the MD and ME Signals:

1. They provide more visible and distinct indications than older type two-indication dwarf signals.
2. Any desired color aspect is available in either upper or lower lens compartment.
3. Being small and compactly built, they are less likely to be damaged.
4. Being totally enclosed, they operate perfectly in any weather.
5. Electrical parts such as terminal blocks, wires, and receptacles, susceptible to break-down and grounding, and consequently contributing to low insulation tests, are reduced to a minimum.
6. Low power consumption.
7. The MD signal case provides space for all control relays, transformers, etc., ordinarily required.
8. No wires in addition to those ordinarily used for the control of a two-indication solenoid dwarf signal are required from the control point to the signal indication.
9. Individual cross protection, or its equivalent, may be retained or provided. In addition, a lever light may be provided which will visibly indicate to the operator the operation of the lever, the signal, and the continuity of the filament of the proceed or of the restricting indication lamp, as desired.
10. If signal selection and control exists through a switch repeater relay, or is being installed, these features may be incorporated in the MD and ME signal controls.

The main difference in construction of these two signals is that the signal case of the MD provides housing space for control relays, transformers, etc., while with the ME signal such apparatus must be housed separately.

Sufficient space is provided for housing a combination assemblage such as one Type K Size 2 relay with a Type S1 or S2 transformer, or with a Type WE relay with rectifier, and resistors and terminal posts. The largest single relay which may be housed in the case is a Type K Size 4.

Both signals are equipped with doublet lenses, the outer lens being the clear standard optical smooth face type, with deflecting bullseye, and the inner lens colored as required.

A convex deflecting or spredlite roundel may be applied in front of the lenses if desired.

A "Phankill Unit" can be supplied in the Types MD and ME Signals, which is a device for reducing the phantom indications which are occasionally apparent in signals facing East or West. When used, it is generally assembled in the yellow indications, only.

A shield is provided behind the lamps in the MD signal which excludes any light from an outside source that may be transmitted through the lenses from the rear when the door is opened.

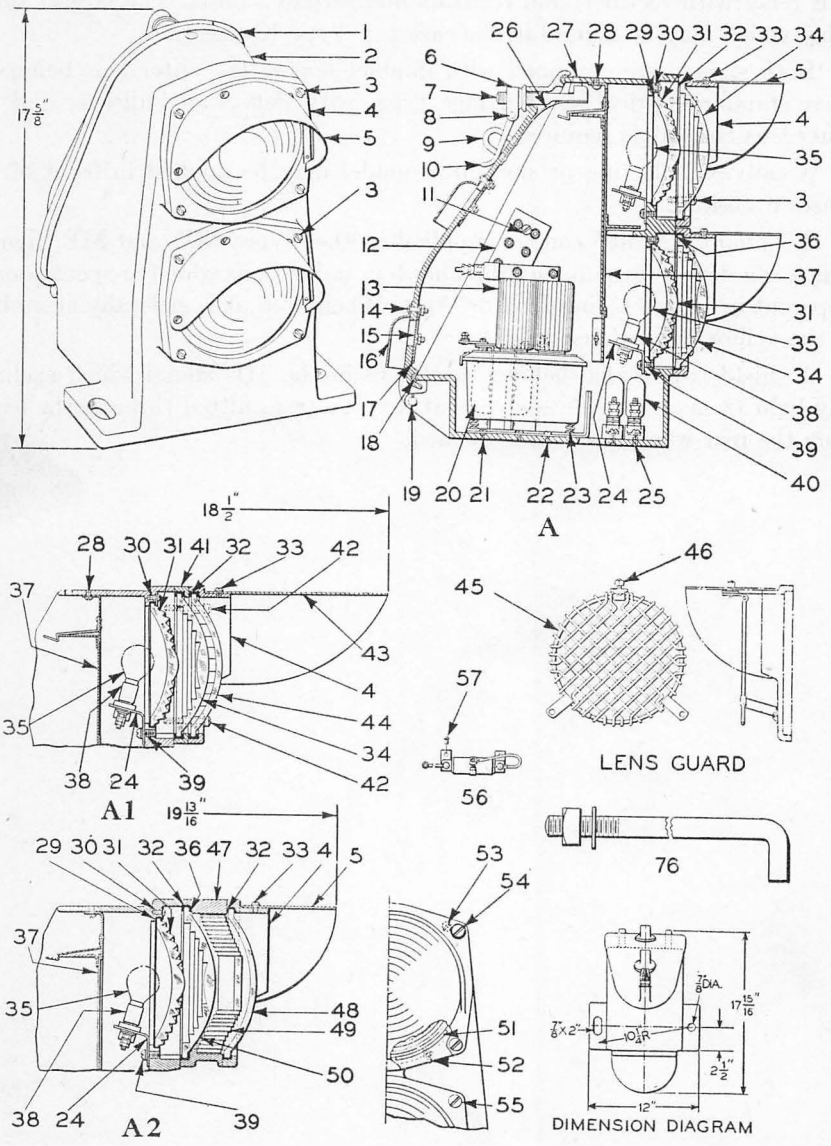

Type MD Color-Light Dwarf Signals

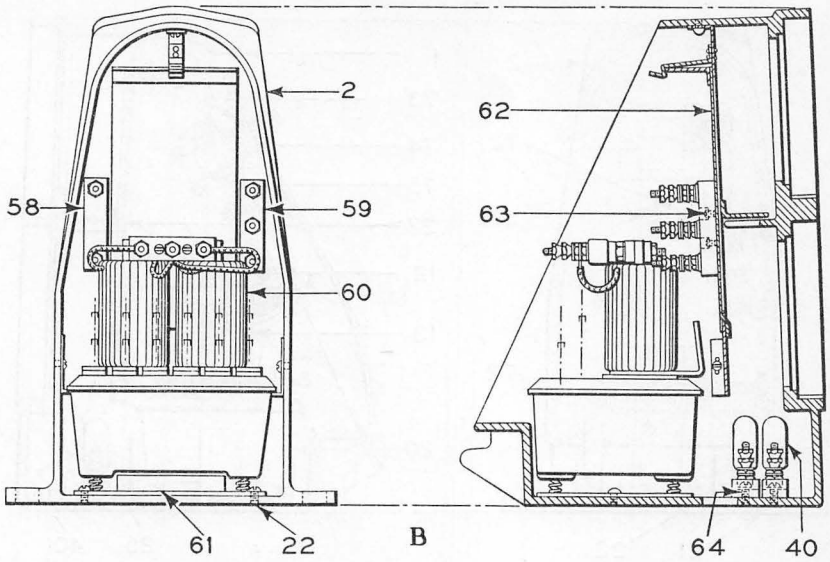

B

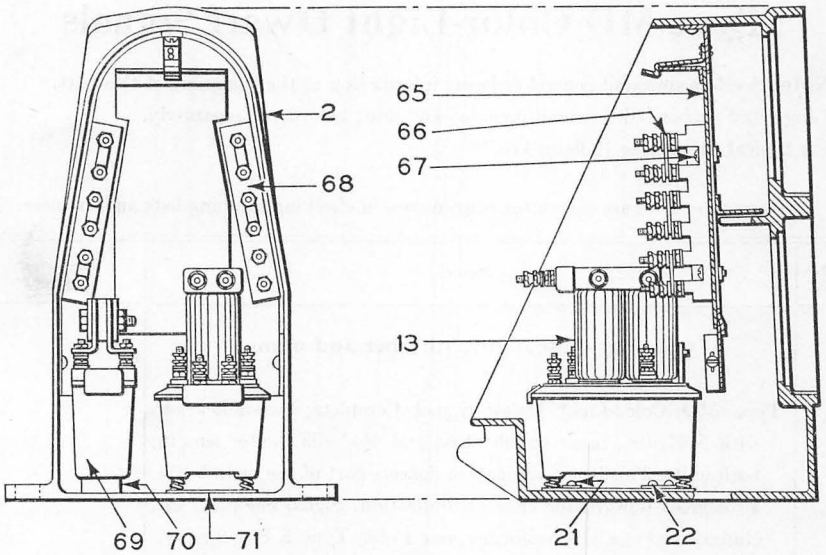

C

Type MD Color-Light Dwarf Signals

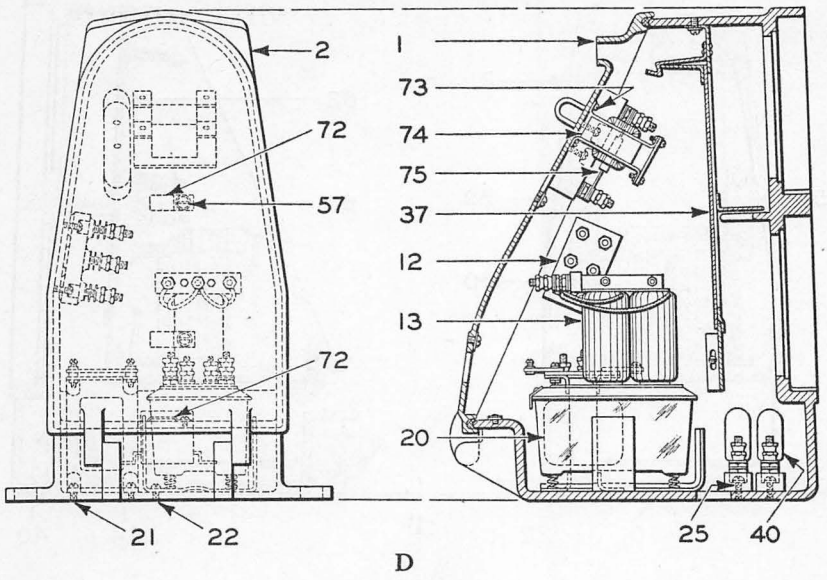

D

Type MD Color-Light Dwarf Signals

Type MD Color-Light Dwarf Signals

Note: See foreword and general ordering information at the beginning of this part.
Lamps and anchor bolts are not included and must be ordered separately.
For typical circuits see Bulletin 175.

Drawing references are shown for convenience in checking shipping lists and invoices.

Fig. No.	Name	Drawing Reference
	Order by plate, figure number and name	
A	Type MD Color-Light Dwarf Signal Complete, two-indication with 5½″ dia., inner doublet lens and 6⅜″ dia., outer lens in both units. This lens combination deflects part of the main beam 40 degrees upward for close-up indication. Signal complete includes one Type S1 transformer, one 1 ohm Type K Size 2 relay, two 200 ohm resistors and one terminal block.	

(*Continued on following page*)

Type MD Color-Light Dwarf Signals

Drawing references are shown for convenience in checking shipping lists and invoices.

Fig. No.	Name	Drawing Reference
	Order by plate, figure number and name	
	Order must specify the following: 1. Color required in each lens unit. 2. Voltage and wattage of lamps. 3. If voltage regulating resistor is required. 4. If lens guards are required. 5. State to what extent signal is to be factory-wired; lamp receptacles to terminals only or wired complete. In the latter case, give lighting bus voltage and frequency and normal rated voltage of control and indication or repeater circuits.....	36722–52
A1	as above, except with outer roundel. This lens combination deflects or spreads part of the main beam for curved track conditions. See Fig. 44 for roundels available. **Order must specify information called for under Fig. A**.....	36722–52
A2	same as Fig. A except with phankill unit Fig. 49 in yellow indication. **Order must specify information called for under Fig. A.**	36722–86
A3	same as Fig. A1 except with phankill unit Fig. 49 in yellow indication. **Order must specify information called for under Fig. A**.....	36722–86
B	Type MD Color-Light Dwarf Signal Complete, two-indication, with 5½″ dia., inner doublet lens and 6⅜″ dia., outer lens in both units. This lens combination deflects part of the main beam 40 degrees upward for close-up indication. Signal complete includes one 1 ohm Type K Size 4 relay, two 200 ohm resistors and two terminal blocks. **Order must specify the following:** 1. Color required in each lens unit. 2. Voltage and wattage of lamps. 3. If voltage regulating resistor is required. 4. If lens guards are required.	

(*Continued on following page*)

GENERAL RAILWAY SIGNAL COMPANY August 1947

Type MD Color-Light Dwarf Signals

Drawing references are shown for convenience in checking shipping lists and invoices.

Fig. No.	Name	Drawing Reference
	Order by plate, figure number and name	
	5. State to what extent signal is to be factory-wired; lamp receptacles to terminals only or wired complete. In the latter case, give lighting bus voltage and frequency and normal rated voltage of control and indication or repeater circuits...	36722–52
B1	as above, except with outer roundel Fig. 44, shown in Fig. A1. This lens combination deflects or spreads part of the main beam for curved track conditions. See Fig. 44 for roundels available. **Order must specify information called for under Fig. B.**	36722–52
B2	same as Fig. B except with phankill unit Fig. 49 in yellow indication. **Order must specify information called for under Fig. B.**	36722–86
B3	same as Fig. B1 except with phankill unit Fig. 49 in yellow indication. **Order must specify information called for under Fig. B**	36722–86
C	Type MD Color-Light Dwarf Signal Complete, two-indication, with 5½″ dia. inner doublet lens and 6⅜″ dia. outer lens in both units. This lens combination deflects part of the main beam 40 degrees upward for close-up indication. Signal complete includes one 500 or 750 ohm Type K Size 2 relay, one Type WE relay with rectifier, and two 6 way terminal blocks. **Order must specify the following:** 1. Color required in each lens unit. 2. Voltage and wattage of lamps. 3. If voltage regulating resistor is required. 4. If lens guards are required. 5. State to what extent signal is to be factory-wired; lamp receptacles to terminals only or wired complete. In the latter case, give lighting bus voltage and frequency and normal rated voltage of control and indication or repeater circuits.....	36722–52
C1	as above, except with outer roundel Fig. 44. This lens combination deflects or spreads part of the main beam for curved track conditions. See Fig. 44 for roundels available. **Order must specify information called for under Fig. C**.....	36722–52

(*Continued on following page*)

Type MD Color-Light Dwarf Signals

Drawing references are shown for convenience in checking shipping lists and invoices.

Fig. No.	Name	Drawing Reference
	Order by plate, figure number and name	
C2	same as Fig. C except with phankill unit Fig. 49 in yellow indication. **Order must specify information called for under Fig. C.**	36722–86
C3	same as Fig. C1 except with phankill unit Fig. 49 in yellow indication. **Order must specify information called for under Fig. C**	36722–86
D	Type MD Color-Light Dwarf Signal Complete, two-indication, with 5½″ dia. inner doublet lens and 6⅜″ dia. outer lens in both units. This lens combination deflects part of the main beam 40 degrees upward for close-up indication. Signal complete includes one Type S1 Transformer, one Type S2 Transformer, one 1 ohm Type K Size 2 relay, two 200 ohm resistors, one 5000 ohm resistor and one 6 way terminal block. **Order must specify the following:** 1. Color required in each lens unit. 2. Voltage and wattage of lamps. 3. If voltage regulating resistor is required. 4. If lens guards are required. 5. State to what extent signal is to be factory-wired; lamp receptacles to terminals only or wired complete. In the latter case, give lighting bus voltage and frequency and normal rated voltage of control and indication or repeater circuits	36722–52
D1	as above, except with outer roundel Fig. 44, shown in Fig. A1. This lens combination deflects or spreads part of the main beam for curved track conditions. See Fig. 44 for roundels available. **Order must specify information called for under Fig. D.**	36722–52
D2	same as Fig. D except with phankill unit Fig. 49 in yellow indication. **Order must specify information called for under Fig. D.**	36722–86
D3	same as Fig. D1 except with phankill unit Fig. 49 in yellow indication. **Order must specify information called for under Fig. D**	36722–86

(Continued on following page)

GENERAL RAILWAY SIGNAL COMPANY August 1947

Type MD Color-Light Dwarf Signals

Drawing references are shown for convenience in checking shipping lists and invoices.

Fig. No.	Name	Drawing Reference
	Order by plate, figure number and name	
1	Door Complete, for case Fig. 2, includes gasket, latch, hasp, staple and ventilators	53057–2 Gr. 1
2	Case, only, for signal. Specify figure number of signal complete for which case is to be used	53071
3	Screw, No. 14-24 x 1″ fil. hd., with lock washer, for fastening hood ring to case	0504–4 0510–1
4	Hood Ring, for hood Fig. 5	49127–34
5	Hood, 4″ long, for signal	49127–61
6	Nut, for lock latch	9525–6
7	Lock Latch, for door	53106–1
8	Pin, $\frac{3}{16}$″ dia. x 1⅛″ lg., for hasp	7568
9	Staple, for door	16914
10	Hasp, for door	9524
11	Screw, No. 10-32 x ½″ fil. hd., with lock washer, for fastening terminal block to case	12563–1 0622
12	Terminal Block Complete, for signal	46048–23 Gr. 3
13	Relay, 1 ohm Type K Size 2. For details and order references see Section E Part 21, Plate E2105	53000–121 Gr. 42
13a	as above, except 500 ohms	53000–122 Gr. 18
13b	same as Fig. 13 except 750 ohms	53000–122 Gr. 20
14	Screw, No. 10-32 x ⅝″ rd. hd., with hex. nut and lock washer, for fastening ventilator to door	2784 38239 0622
15	Screen, for ventilator	36022
16	Hood, for ventilator	36020
17	Plate, for screen on ventilator	36021
18	Gasket, for door	43460
19	Pin, with cotter, for door hinge	730–21 0663–1

(*Continued on following page*)

Type MD Color-Light Dwarf Signals

Drawing references are shown for convenience in checking shipping lists and invoices.

Fig. No.	Name	Drawing Reference
	Order by plate, figure number and name	
20	Transformer, Type S, Size 1, 110 volts, 60 cycles, 12.5 volt secondary. For other transformers see Section P, Part 1, Plate P0175.	53715–1 Gr. 1 AMUS–TR–13AS–47
20a	as above, except 10.5 volt secondary	53715–1 Gr. 1 AMUS–TR–13AS–50
21	Screw, No. 10-32 x 3/8″ rd. hd., with lock washer, for mounting transformer	3044–5 0622
22	Screw, No. 8-32 x 5/16″ rd. hd., with lock washer, for fastening relay brackets Figs. 23 and 61 to signal case	2430–5 43058–1
23	Bracket Complete, for relay mounting	42819–1 Gr. 1
24	Bracket, for holding receptacle Fig. 38	53170–1
25	Screw, No. 10-32 x 1/2″ rd. hd., with pasteboard washer, for fastening resistor Fig. 40 to case	3044–9 29728–2
26	Spring, for lock latch	53105–2
27	Stud, for door locking device	441–121
28	Screw, No. 10-32 x 5/16″ rd. hd., with lock washer, for fastening shield to case	3044–2 0622
29	Gasket, for use between inner lens and adapter	13014–74
30	Screw, No. 8-32 x 3/8″ rd. hd., with washer and lock washer, for holding inner lens in case	2553–11 1601–64 43058–1
31	Inner lens, 5 1/2″ dia., red, 1/2″ focus, for use with Figs. A to D inclusive	43988–2
31a	as above, except yellow	43988–1
31b	same as Fig. 31 except green	43988
31c	same as Fig. 31 except purple	43988–4
31d	same as Fig. 31 except lunar white	43988–5
32	Gasket, for use between outer lens and adapter	13014–56
33	Screw, No. 10-32 x 5/16″ rd. hd., with lock washer, for fastening hood to hood ring	3044–3 53029–7

(*Continued on following page*)

GENERAL RAILWAY SIGNAL COMPANY August 1947

Type MD Color-Light Dwarf Signals

Drawing references are shown for convenience in checking shipping lists and invoices.

Fig. No.	Name	Drawing Reference
	Order by plate, figure number and name	
34	Outer lens, 6⅜″ dia., clear, 3¾″ focus, with 40-degree deflecting bulls eye. This lens deflects part of the main beam 40 degrees upward for close-up indication, for use with Fig. A to D inclusive	53119–18
34a	as above, except with gasket	54193–1 Gr. 2
35	Incandescent Lamp, single contact, candelabra bayonet base. Refer to Section H, Part 39 and order separately	34866
36	Candle Wicking, for use between outer lens and adapter	0160
37	Shield Complete, includes door, spring and plate	52885–1 Gr. 6
38	Receptacle Complete, for lamp	53058 Gr. 3
39	Screw, No. 14-24 x ½″ rd. hd., with lock washer, for fastening bracket Fig. 24 to case	21029–1 0510–1
40	Resistor Complete, 200 ohms	50482–12 Gr. 7
41	Bezel Ring, for use between hood ring and case	43983–68
42	Screw, No. 14-24 x 1⅝″ fil. hd., with lock washer, for fastening hood ring and bezel ring to case	0504–13 0510–1
43	Hood, for signal, 8″ long	49127–50
44	Outer Roundel, 6⅜″ dia., clear, 25 degree deflecting	9238–60
44a	as above, except with gasket	
44b	same as Fig. 44, except 20 degree deflecting	9238–14
44c	same as Fig. 44b, except with gasket	54194–1 Gr. 1
44d	same as Fig. 44, except 10 degree deflecting	9238–8
44e	same as Fig. 44d, except with gasket	
44f	same as Fig. 44, except 25 degree spredlite	9238–65
44g	same as Fig. 44f, except with gasket	
45	Lens Guard Complete, for signal	38040–8 Gr. 1
46	Screw, No. 10-32 x ⅝″ hex. hd., with hex. nut, leather washer and lock washer, for lens guard	3044–11 6471 1533–7 0622–1
47	Ring, for use with phankill unit	43983–75
48	Outer Roundel, 6⅜″ dia., plain convex, for use with phankill unit.	9238–2

(Continued on following page)

Type MD Color-Light Dwarf Signals

Drawing references are shown for convenience in checking shipping lists and invoices.

Fig. No.	Name	Drawing Reference
	Order by plate, figure number and name	
48a	same as Fig. 48, except with gasket	
49	Phankill Unit, 5 7/8" dia., with 25 degree prism close-up	56629–1
50	Outer lens, 6 3/8" dia., clear, for use with phankill unit	53119
50a	as above, except with gasket	54193–1 Gr. 1
51	Strap, for holding phankill unit in ring	51432–71
52	Screw, No. 10-32 x 21/32", headless, cup point, with hex. nut, for fastening phankill unit in ring	3018–30 40796
53	Screw, No. 10-32 x 1 7/8", with lock washer, for holding phankill ring to case	0325–8 34494–1
54	Screw, No. 14-24 x 3" rd. hd., with lock washer, for fastening hood ring to case where phankill is used	48561–8 0510–1
55	Screw, No. 14-24 x 1" rd. hd., with lock washer, for fastening hood ring Fig. 4 to case	50651–1 0510–1
56	Resistor Complete, voltage regulating, 1 ohm	55945–1 Gr. 4
56a	as above, except 2 ohms	55945–8 Gr. 8
57	Screw, No. 8-32 x 5/16" rd. hd., with lock washer, for fastening cleat Fig. 72 to door, also for fastening resistor Fig. 56 to case	2553–9 53029–4
58	Terminal Block Complete	46048–9 Gr. 2
59	Terminal Block Complete	46048–9 Gr. 1
60	Relay, 1 ohm, Type K Size 4. For details and order references see Section E, Part 21, Plate E2109	53000–84 Gr. 55
61	Bracket Complete, for relay mounting	53008 Gr. 1
62	Shield Complete, for Fig. B	52885–1 Gr. 5
63	Screw, No. 10-32 x 7/8" rd. hd., with lock washer and nut, for fastening terminal block to shield shown in Fig. B	12563–9 0622 577–13
64	Screw, No. 10-32 x 7/16" rd. hd., with pasteboard washer, for fastening resistor to case	3044–7 29728–2
65	Shield Complete, for Fig. C	52885–1 Gr. 4
66	Connector, for terminal block Fig. 68	43587–6

(Continued on following page)

GENERAL RAILWAY SIGNAL COMPANY · August 1947

Type MD Color-Light Dwarf Signals

Drawing references are shown for convenience in checking shipping lists and invoices.

Fig. No.	Name	Drawing Reference
	Order by plate, figure number and name	
67	Screw, No. 10-32 x ¾″ rd. hd., with hex. nut and lock washer, for fastening terminal block to shield	2438–16 577–13 0622–1
68	Terminal Block Complete	46048–24 Gr. 5
69	Relay, Type WE, with rectifier. For use in series with 10 volt, 10 watt lamp	54250–18 Gr. 28
69a	as above, except for 11 volt, 14 + 3.5 watt lamp	54250–18 Gr. 27
70	Bracket Complete, for Type WE relay mounting	54844–60
71	Plate, for mounting Type K Size 2 Relay	53008–13 Gr. 1
72	Cleat, for holding trasnformer and resistor leads	54108–2
73	Screw, No. 8-32 x 5/16″ rd. hd., with washers, for fastening transformer to door	2430–6 40257–1 43058–1
74	Transformer, Type S Size 2, 110 volts, 60 cycles, 64 volt secondary. For other transformers see Section P, Part 1, Plate P0175	53715–2 Gr. 1
75	Resistor, 5000 ohms, for signal Fig. D	57831–2 Gr. 8
76	Anchor Bolt, ¾″–9 x 18″ long, with sq. nut and washer, for fastening signal to foundation	36182 35703

Memoranda

GENERAL RAILWAY SIGNAL COMPANY August 1947

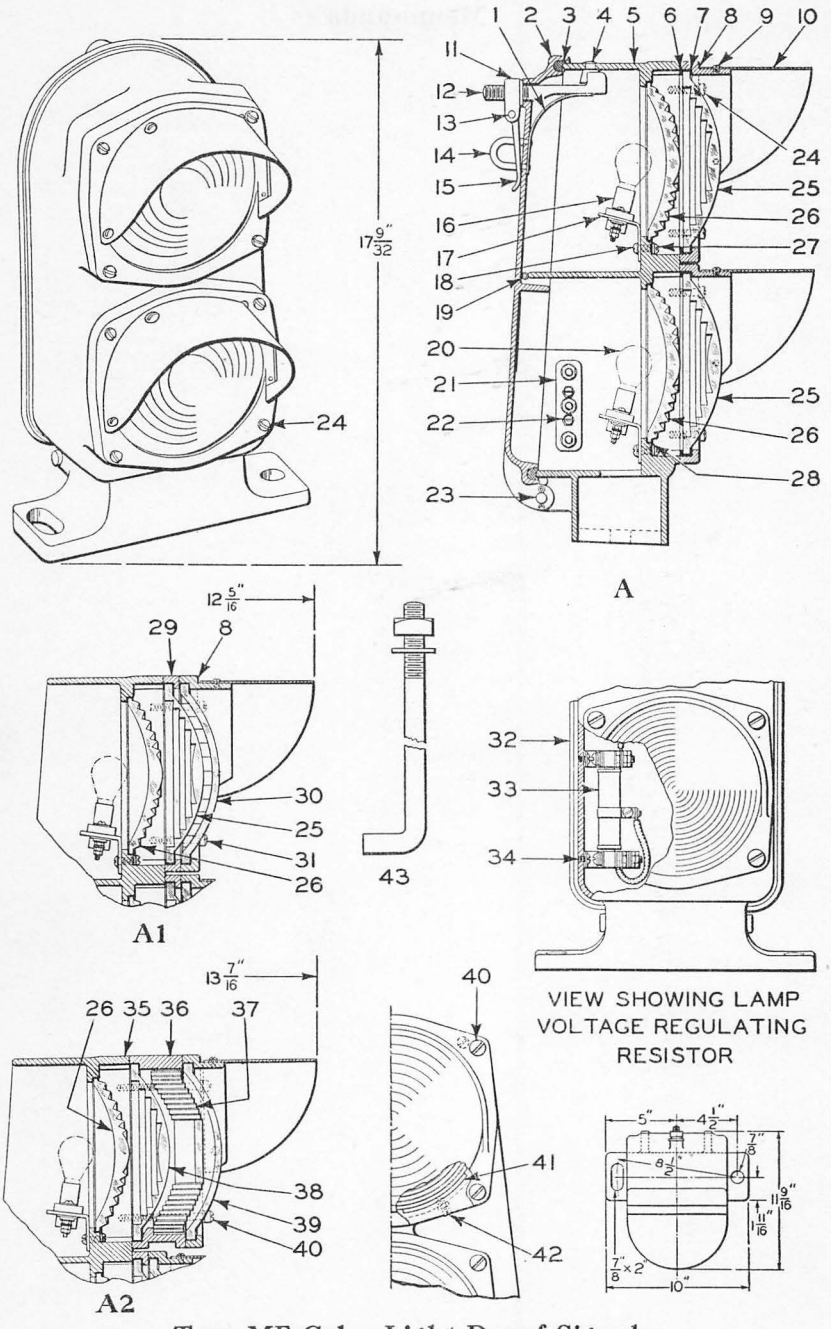

Type ME Color-Light Dwarf Signals

Type ME Color-Light Dwarf Signals

Note: See foreword and general ordering information at the beginning of this part.
Lamps and anchor bolts are not included and must be ordered separately.
For typical circuits see Bulletin 175.

Drawing references are shown for convenience in checking shipping lists and invoices.

Fig. No.	Name	Drawing Reference
	Order by plate, figure number and name.	
A	Type ME Color-Light Dwarf Signal Complete, two-indication, with 5½″ dia. inner doublet lens and 6⅜″ dia. outer lens in both units. This lens combination deflects parts of the main beam 40 degrees upward for close-up indication. **Order must specify the following:** 1. Color required in each lens unit. 2. Voltage and wattage of lamps. 3. If voltage regulating resistor is required. 4. If lens guards are required. (See Plate H3401, Fig. 45.) 5. If backlights are required	36722–60
A1	as above, except with outer roundel. This lens combination deflects or spreads part of the main beam for curved track conditions. See Fig. 30 for roundels available. **Order must specify information called for under Fig. A**	36722–60
A2	same as Fig. A1 except with phankill unit Fig. 37 in yellow indication. **Order must specify information called for under Fig. A**	36722–75
A3	same as Fig. A except with phankill unit Fig. 37 in yellow indication. **Order must specify information called for under Fig. A.**	36722–75
1	Spring, for door	53105
2	Door Complete, with hasp and gasket, for signal unit	15076–16 Gr. 1
2a	as above, except with backlight	15076–17 Gr. 1
3	Gasket, for door	43460
4	Stud, for door locking device	441–121
5	Case, only, for signal units Figs. A and A1	36726–86
6	Wicking, for use between outer lens and adapter	0160
7	Gasket, for use between outer lens and adapter	13014–56

(Continued on following page)

GENERAL RAILWAY SIGNAL COMPANY August 1947

Type ME Color-Light Dwarf Signals

Drawing references are shown for convenience in checking shipping lists and invoices.

Fig. No.	Name	Drawing Reference
	Order by plate, figure number and name	
8	Hood Adapter, as shown, for signal	49127–34
9	Screw, No. 10-32 x $\frac{5}{16}$″ rd. hd., with lock washer, for fastening hood to adapter	3044–3 53029–7
10	Hood, 4″ long, for signal units	49127–61
10a	as above, except 8″ long	49127–50
11	Nut, for lock latch	9525–6
12	Lock Latch, for door	53106–1
13	Pin, $\frac{3}{16}$″ dia. x 1$\frac{1}{8}$″ lg., for hasp	7568
14	Staple, for door	16914
15	Hasp, for door	9524
16	Receptacle Complete, for lamp	53058 Gr. 3
17	Bracket, for mounting receptacle	53170–1
18	Screw, No. 14-24 x $\frac{1}{2}$″ rd. hd., with lock washer, for mounting bracket to case	21029–1 0510–1
19	Screw, No. 6-32 x $\frac{5}{8}$″ rd. hd., with lock washer and bushing, used as wire guide	2613–18 48526–1 7350–24
20	Incandescent Lamp, single contact, candelabra bayonet base. Refer to Section H, Part 39, when ordering	34866
21	Terminal Block Complete, for signal units	46048–9 Gr. 1
22	Screw, No. 10-32 x $\frac{3}{4}$″ fil. hd., for fastening terminal block to case.	12280–13
23	Pin, with cotter for door hinge	730–21 0663–1
24	Screw, No. 14-24 x 1″ fil. hd., with lock washer, for fastening hood adapter Fig. 8 to case	0504–4 0510–1
25	Outer Lens, 6$\frac{3}{8}$″ dia., clear, 3$\frac{3}{4}$″ focus with 40 degree deflecting bullseye. This lens deflects part of the main beam 40 degrees upward for close-up indication	53119–18
25a	as above, except with gasket	54193–1 Gr. 2
26	Inner Lens, 5$\frac{1}{2}$″ dia., red, $\frac{1}{2}$″ focus	43988–2
26a	as above, except yellow	43988–1

(*Continued on following page*)

Type ME Color-Light Dwarf Signals

Drawing references are shown for convenience in checking shipping lists and invoices.

Fig. No.	Name	Drawing Reference
	Order by plate, figure number and name	
26b	same as Fig. 26 except green	43988
26c	same as Fig. 26 except purple	43988–4
26d	same as Fig. 26 except lunar white	43988–5
27	Screw, No. 8-32 x 3/8″ rd. hd., with washer and lock washer, for holding inner lens in signal unit	2553–11 1601–64 43058–1
28	Gasket, for inner lens	13014–74
29	Ring, for signal unit Fig. A1	43938–68
30	Outer Roundel, 6 3/8″ dia., clear, 25 degree deflecting	9238–60
30a	as above, except with gasket	
30b	same as Fig. 30, except 20 degree deflecting	9238–14
30c	same as Fig. 30b, except with gasket	54194–1 Gr. 1
30d	same as Fig. 30, except 10 degree deflecting	9238–8
30e	same as Fig. 30d, except with gasket	
30f	same as Fig. 30, except 25 degree spredlite	9238–65
30g	same as Fig. 30f, except with gasket	
31	Screw, No. 10-32 x 1 5/8″ fil. hd., with lock washer, for fastening ring Fig. 29 to case	0504–13 0510–1
32	Case, only, for signal unit using voltage regulating resistor	36726–109
33	Resistor Complete, voltage regulating, 1 ohm	55945–1 Gr. 4
33a	as above, except 2 ohms	55945–1 Gr. 8
34	Screw, No. 8-32 x 5/16″ rd. hd., with lock washer, for mounting resistor Fig. 33	2553–9 53029–4
35	Case, only, for signal unit Fig. A2	36726–112
36	Ring, for use when phankill units are employed	43983–75
37	Phankill Unit, 5 7/8″ dia., with 25 degree prism close-up	56629–1
38	Outer Lens, 6 3/8″ dia., clear, for use with phankill unit	53119
38a	as above, except with gasket	54193–1 Gr. 1
39	Outer Roundel, 6 3/8″ dia. plain convex, for use with phankill unit	9238–2
39a	as above, except with gasket	

(Continued on following page)

GENERAL RAILWAY SIGNAL COMPANY August 1947

Type ME Color-Light Dwarf Signals

Drawing references are shown for convenience in checking shipping lists and invoices.

Fig. No.	Name	Drawing Reference
	Order by plate, figure number and name	
40	Screw, No. 14-24 x 3″ rd. hd., with lock washer, for mounting hood adapter to signal unit Fig. A2	48561–8 0510–1
41	Strap, for holding phankill unit in place	51432–71
42	Set Screw, No. 10-32 x $\frac{21}{32}$″ headless, with hex. nut, for strap	3018–30 40796
43	Anchor Bolt, $\frac{3}{4}$″–9 x 18″ long, with sq. nut and washer, for fastening signal to foundation	36182 35703

Section H, Part 39

Incandescent Lamps

Supersedes Section H, Part 39, dated April 1943

General Railway Signal Company
Printed in U. S. A.

Incandescent Lamps

Foreword and General Ordering Information

The incandescent lamps shown on the following pages have been arranged into three classifications, namely:

1. Plate H3901 shows lamps for Light Signals and Electric Semaphore Lamps, using single contact candelabra bayonet bases.
2. Plate H3906 shows rebased lamps for Light Signals.
3. Plate H3911 shows lamps for indicating purposes and other miscellaneous applications, equipped with various types of bases.

Railway signal lamps are rated in volts and either watts or amperes. All performance data tabulated is based upon operation at rated volts.

A brief explanation of the terms used in connection with incandescent lamps is given below:

Bulb Shapes—The shapes of lamp bulbs are designated by letter as illustrated below, and the number following the letter indicates the maximum diameter in eighths of an inch.

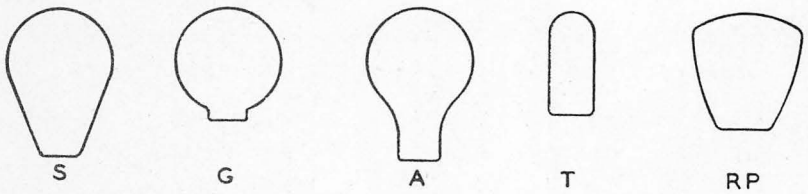

Examples: S-11 = $\frac{11}{8} = 1\frac{3}{8}$" diameter

G-16½ = $\frac{16\frac{1}{2}}{8} = 2\frac{1}{16}$" diameter

All bulbs are clear glass unless otherwise specified.

Filament Form—These are designated by a prefix letter, a number and sometimes a suffix letter, such as S-1 or C-2V. The prefix letter indicates whether the wire is (S) straight, (C) coiled, or (CC) coiled coil; the number indicates the arrangement of the filaments on the supports, and the suffix letter "R" or "V" indicates whether the filament is rounded or "V" shape. Two identical filaments in multiple have a prefix "2" such as 2C-2V. "Inv." means the filament is inverted from its usual position of mounting.

Lamps illustrated on the following pages show only typical filament forms for each figure. Consult tabulation for exact filament form supplied with rating selected.

The filament forms are shown below.

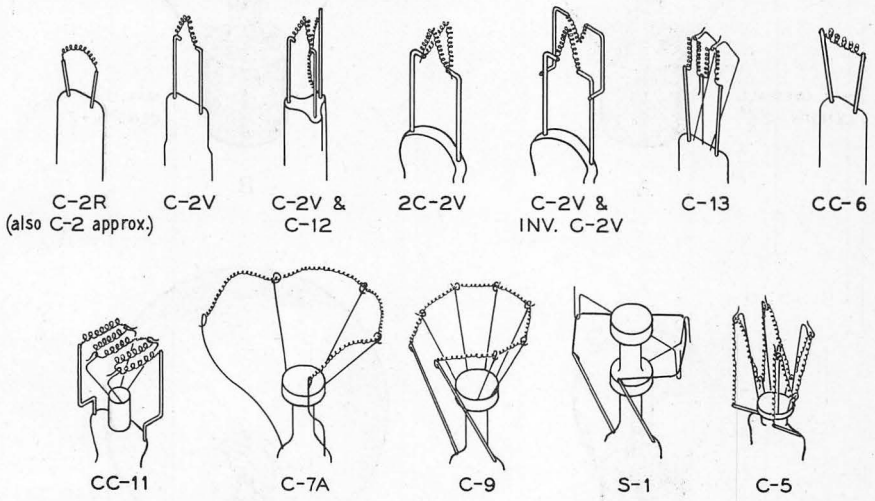

Filament Precision—This term represents the maximum variation in light center length and axial alignment in inches ±.

Light Center Length—This term represents the distance from the center of the light source to the point shown below for the base used:

(a) Screw Base—Bottom of base contact (not including solder)

(b) Bayonet and Rebased Types—Top of base pins

PLATE H3901

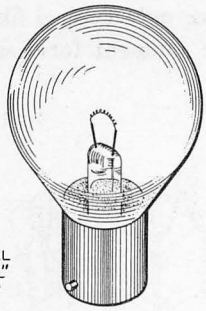

MAX. OVER-ALL LENGTH – $2\frac{3}{8}$"

A

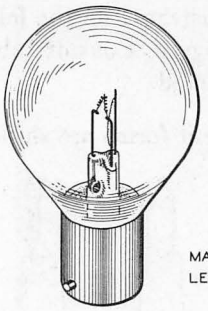

MAX. OVER-ALL LENGTH – $2\frac{3}{8}$"

B

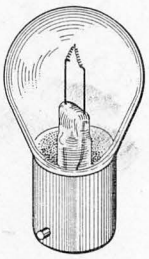

MAX. OVER-ALL LENGTH – 2"

D

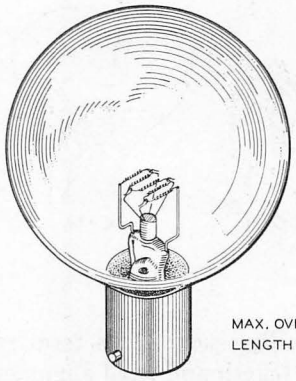

MAX. OVER-ALL LENGTH – 3".

E

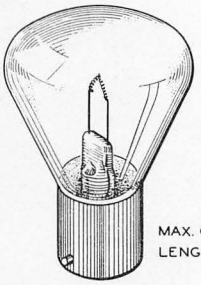

MAX. OVER-ALL LENGTH – $2\frac{1}{4}$"

F

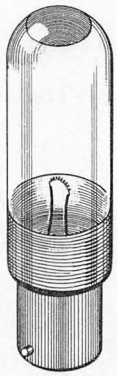

MAX. OVER-ALL LENGTH – 3"

G

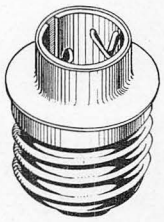

H

Incandescent Lamps S.C. Bayonet Base

Incandescent Lamps

With Single Contact Candelabra Bayonet Bases For Color-Light Signals and Semaphore Lamps

Note: See foreword and general information at the beginning of this part.
The list shown below includes lamps for use with the following types of signals:

Types S, SA, and SC Searchlight Signals
Types MD, ME, and W Color-Light Signals
Types XC, XD, and W Highway Crossing Signals
Types U, V, and VA Color-Position-Light Signals
Type C Position-Light Dwarf Signals
Electric Semaphore Signals
Electric Switch Lamps
Cab Signals

Drawing references are shown for convenience in checking shipping lists and invoices.

Order by plate, figure number and name

SINGLE CONTACT CANDELABRA BAYONET BASES

Fig. No.	RATING			Candle Power	Bulb Shape	FILAMENT			Average Life in Hours	Drawing Reference
	Volts	Amps.	Watts			Form	Precision	Light Cen. Length		
A †	3.5	.12		.22	S-11	C-2R	3/64″	1¼″	1000	34866-56
A1†	3.5	.30		.6	S-11	C-2R	3/64″	1¼″	1000	34866-2
A2	4.		3	2.	S-11	C-2R	1/64″	1¼″	1000	34866-35
A3	6.		10.	9.	S-11	C-2R	1/64″	1¼″	1000	34866-48
A4†	8.	.25		1.5	S-11	C-2R	3/64″	1¼″	1000	34866-3
A5	8.		5	4.	S-11	C-2R	1/64″	1¼″	1000	34866-55
A6	8.		10.	9.8	S-11	C-2R	1/64″	1¼″	1000	34866-43
A7	8.		18.	20.	S-11	C-2R	1/64″	1¼″	1000	34866-44
A8	9.		15.3	16.6	S-11	C-2R	1/64″	1¼″	1000	34866-34
A9 †	10.	.25		1.9	S-11	C-2R	3/64″	1¼″	1000	34866-4
A10	10.		5.	4.1	S-11	C-2R	1/64″	1¼″	1000	34866-38
A11	10.		10.	9.8	S-11	C-2R	1/64″	1¼″	1000	34866-33
A12	10.		18.	20.3	S-11	C-2R	1/64″	1¼″	1000	34866-29
A13	10.		25.	27.8	S-11	C-2R	1/64″	1¼″	1000	34866-47
A14	11.		11.	8.5	S-11	C-2V	1/64″	1¼″	2500	34866-59
A15†	12.	.25		2.3	S-11	C-2R	3/64″	1¼″	1000	34866-5
A16†	13.5	.25		2.6	S-11	C-2R	3/64″	1¼″	1000	34866-6
A17	13.5		17.	16.	S-11	C-2V	1/64″	1¼″	2000	34866-25
B	8.		5 + 3.5	3.8	S-11	C-2V & C-12	1/64″	1¼″	1000	34866-58
B1	8.		13 + 3.5	12.8	S-11	C-2V & C-12	1/64″	1¼″	1000	34866-37
B2	10.		5 + 3.5	3.	S-11	C-2V & C-12	1/64″	1¼″	1000	34866-70
B3	10.		13 + 3.5	13.	S-11	C-2V & C-12	1/64″	1¼″	1000	34866-60
D	5.4		12.1	11.3	S-8	C-2V	.03″ ax. al. .04″ L.C.L.	1¼″	1000	34866-27
D1	11.3		13.3	13.8	S-8	C-2R	.03″ ax. al. .04″ L.C.L.	1¼″	1000	34866-32
E*	115.		25.	17.3	G-16½	CC-11	2/64″	1¼″	1000	34866-45
E1**	120.		25.	17.9	G-16½	C-5	4/64″	1¼″	1000	34866-46
F	5.4		19.5	20.	RP-11	C-2V	.03″ ax. al. .04″ L.C.L.	1¼″	1000	34866-66
F1	32.		10.5	7.	RP-11	C-13		1¼″	1000	34866-61
G	11.3		13.3	13.8	T-6	C-2R	.03″ ax. al. .04″ L.C.L.	1¼″	1000	34866-64
H	Adapter, for mounting two-pin candelabra bayonet base lamp in medium screw base receptacle.									55345

*Horizontal Burning **Vertical Burning

† May be furnished in S-8 bulb shape, same as Fig. D

PLATE H3906

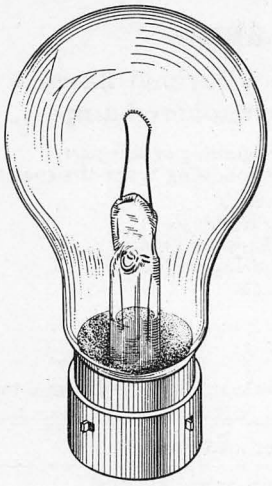

MAX. OVER-ALL LENGTH - $3\frac{3}{4}$"

A

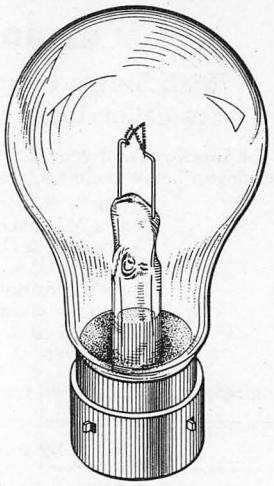

MAX. OVER-ALL LENGTH - $3\frac{3}{4}$"

B

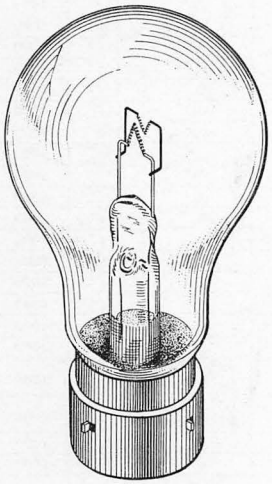

MAX. OVER-ALL LENGTH - $3\frac{3}{4}$"

C

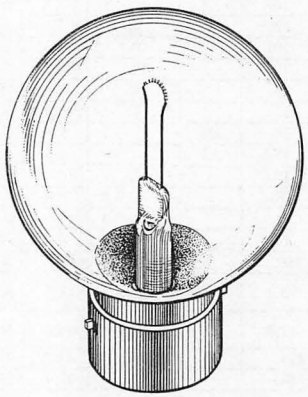

MAX. OVER-ALL LENGTH - $3\frac{1}{8}$"

D

Incandescent Lamps Special Rebased Type

June 1947 GENERAL RAILWAY SIGNAL COMPANY

Incandescent Lamps

For Color-Light Signals
Special Rebased Type

Note: See foreword and general ordering information at the beginning of this part.
These lamps are used with the following:

Types AN, D, E, F, G, and L Doublet Lens Color-Light Signals
Type B Position-Light High Signals (Fig. D only)

Drawing references are shown for convenience in checking shipping lists and invoices.

Order by plate, figure number and name

REBASED SINGLE FILAMENT—3 PIN

Fig. No.	RATING			Bulb Shape	FILAMENT			Average Life in Hours	Drawing Reference
	Volts	Watts	Candle Power		Form	Precision	Light Cen. Length		
A	8	10	9.5	A-15	C-2R	1/64"	2 3/16"	1000	47438-9 Gr. 5
A1	8	18	16.8	A-15	C-2R	1/64"	2 3/16"	1500	47438-9 Gr. 4
A2	8	40	27	A-15	C-2V	1/64"	2 3/16"	3000	47438-23 Gr. 1
A3	10	10	7.9	A-15	C-2R	1/64"	2 3/16"	1500	47438-9 Gr. 2
A4	10	18	17.5	A-15	C-2R	1/64"	2 3/16"	1500	47438-9 Gr. 6
A5	10	40	46	A-15	C-2V	1/64"	2 3/16"	1500	47438-15 Gr. 1
A7	120	30	20.5	A-15	C-5	1/64"	2 3/16"	1500	47438-12 Gr. 1

REBASED DOUBLE FILAMENT—3 PIN

B	8	18	13.2	A-15	2C-2V	1/64"	2 3/16"	1500	47438-6 Gr. 2
B1	10	18	14.3	A-15	2C-2V	1/64"	2 3/16"	1500	47438-6 Gr. 3
B2	10	40	38.2	A-15	2C-2V	1/64"	2 3/16"	1500	47438-6 Gr. 1
B3	30	36	27.5	A-15	2C-2V	1/64"	2 3/16"	1500	47438-6 Gr. 4

REBASED MAJOR AND MINOR FILAMENTS—3 PIN

C	8	18+3.5	16.8	A-15	C-2V & Inv. C-2V	1/64"	2 3/16"	1500*	47438-22 Gr. 1
C1	10	18+3.5	16.5	A-15	C-2V & CC-6	1/64"	2 3/16"	1500*	47438-20 Gr. 1

REBASED SINGLE FILAMENT—2 PIN

D	12	9	7.5	G-16½	C-2R	1/64"	1.91" **	1500	47438-14 Gr. 1

*Rating of Major Filament only.

**From top of pins to top of filament.

PLATE H3911

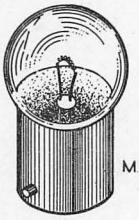

A

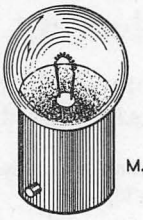

B

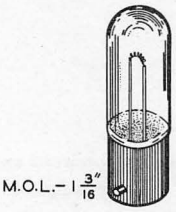

D

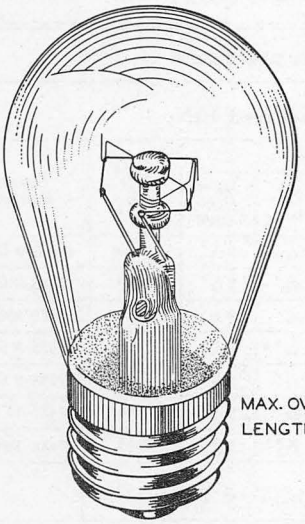

E

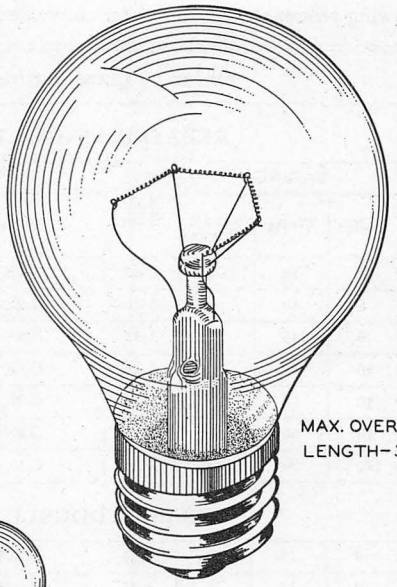

F

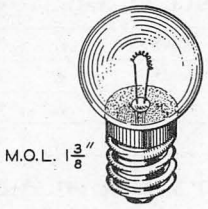

G

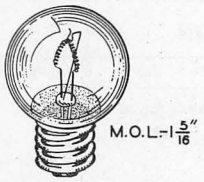

J

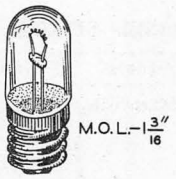

K

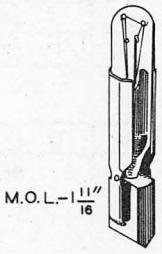

N

Incandescent Lamps

Incandescent Lamps

For Indicating Purposes and For Electric Semaphore Lamps

Note: See foreword and general ordering information at the beginning of this part.
The list shown below includes lamps for use with the following devices:

cTc Control Machines
NX Control Machines
Lever Lights in Interlocking Machines
Illuminated Track Indicators and Diagrams
Electric Semaphore Lamps, etc.

Drawing references are shown for convenience in checking shipping lists and invoices.

Order by plate, figure number and name

Fig. No.	RATING			Candle Power	Type of Base	Bulb Shape	FILAMENT		Average Life in Hours	Drawing Reference
	Volts	Amps.	Watts				Form	Light Cen. Length		
A	6-8	.55		3	S.C. Bay. Cand.	G-6	C-2R	¾"	500	48088-4
A1	12-16	.36		3	S.C. Bay. Cand.	G-6	C-2R	13/16"	1000	48088-5
A2	18-24	.17		3	S.C. Bay. Cand.	G-6	C-2V	¾"	200	48088-3
B	12-16	.36		3	D.C. Bay. Cand.	G-6	C-2R	13/16"	1000	48088-6
D	12.3	.14		1	Min. Bay.	T-3¼	C-2R	5/8"	1000	57026-2
D1	12.3	.14		Outside red	Min. Bay.	T-3¼	C-2R	5/8"	1000	57026-3
D2	6-8	.15			Min. Bay.	T-3¼	C-2R	¾"	3000	57026-4
E	12		2.5	1.3	Med. Screw	S-14	S-1	2½"	1500	50371-12
E1	12		5.	3.2	Med. Screw	S-14	S-1	2 9/32"	1500	50371
E2	14		2.5	1.3	Med. Screw	S-14	S-1	2 9/32"	1500	50371-11
E4	130		10.	6.4	Med. Screw	S-14	S-1	2½"	1000	50371-2
E5	120		10.	Inside red	Med. Screw	S-14	C-9	2½"	1500	44775-4
E6	125		10.	6.2	Med. Screw	S-14	C-9	2½"	1500	44775-6
F	120		25.	Inside Frosted	Med. Screw	A-19	C-9	2½"	1000	44775-10
F1	34		15.	Inside Frosted	Med. Screw	A-15	C-9	2½"	1000	50371-13
G	12-16	.57		6.	Cand. Screw	G-6	C-2R	13/16"	750	43198-15
J	14	.2		1.4	Min. Screw	G-6	C-2V	7/8"	1000	43198-7
K	6.3	.15		.5	Min. Screw	T-3¼	C-2R	15/16"	3000	43198-11
K1	6.3	.25		.8	Min. Screw	T-3¼	C-2R	15/16"	3000	43198-20
K2	6.3	.15		Outside green	Min. Screw	T-3¼	C-2R	15/16"	3000	43198-22
K3	6.3	.15		Outside yellow	Min. Screw	T-3¼	C-2R	15/16"	3000	43198-17
K4	6.3	.15		Outside red	Min. Screw	T-3¼	C-2R	15/16"	3000	43198-18
K5	6.3	.15		Frosted	Min. Screw	T-3¼	C-2R	15/16"	3000	43198-12
N	4	.17 to .21		.25	Slide	T-2	C-6		1500	52879
N1	8	.08 to .10		.20	Slide	T-2	C-21		1000	52879-12
N2	12	.09 to .11		.28	Slide	T-2	C-21		1000	52879-1
N3	12	.17		1.10	Slide	T-2	C-21		1000	52879-6
N4	12	.17		Red tip	Slide	T-2	C-21		1000	52879-7
N5	12	.17		Green tip	Slide	T-2	C-21		1000	52879-8
N6	16	.09 to .11		.37	Slide	T-2	C-21		1000	52879-3
N7	24	.032 to .038		.21	Slide	T-2	C-21		1000	52879-2
N8	24	.09 to .11		.60	Slide	T-2	C-21		1000	52879-5
N9	24	.09 to .11		Red Tip	Slide	T-2	C-21		1000	52879-9
N10	24	.09 to .11		Green tip	Slide	T-2	C-21		1000	52879-10
N11	24	.09 to .11		Amber tip	Slide	T-2	C-21		1000	52879-11

Memoranda

June 1947 GENERAL RAILWAY SIGNAL COMPANY

Incandescent Lamps

For Color-Light Signals
Special Rebased Type

Note: See foreword and general ordering information at the beginning of this part.
These lamps are used with the following:

Types AN, D, E, F, G, and L Doublet Lens Color-Light Signals
Type B Position-Light High Signals (Fig. D only)

Drawing references are shown for convenience in checking shipping lists and invoices.

Order by plate, figure number and name

REBASED SINGLE FILAMENT—3 PIN

Fig. No.	RATING			Bulb Shape	FILAMENT			Average Life in Hours	Drawing Reference
	Volts	Watts	Candle Power		Form	Precision	Light Cen. Length		
A	8	10	9.5	A-15	C-2R	1/64"	2 3/16"	1000	47438-9 Gr. 5
A1	8	18	16.8	A-15	C-2R	1/64"	2 3/16"	1500	47438-9 Gr. 4
A2	8	40	27	A-15	C-2V	1/64"	2 3/16"	3000	47438-23 Gr. 1
A3	10	10	7.9	A-15	C-2R	1/64"	2 3/16"	1500	47438-9 Gr. 2
A4	10	18	17.5	A-15	C-2R	1/64"	2 3/16"	1500	47438-9 Gr. 6
A5	10	40	46	A-15	C-2V	1/64"	2 3/16"	1500	47438-15 Gr. 1
A7	120	30	20.5	A-15	C-5	1/64"	2 3/16"	1500	47438-12 Gr. 1

REBASED DOUBLE FILAMENT—3 PIN

B	8	18	13.2	A-15	2C-2V	1/64"	2 3/16"	1500	47438-6 Gr. 2
B1	10	18	14.3	A-15	2C-2V	1/64"	2 3/16"	1500	47438-6 Gr. 3
B2	10	40	38.2	A-15	2C-2V	1/64"	2 3/16"	1500	47438-6 Gr. 1
B3	30	36	27.5	A-15	2C-2V	1/64"	2 3/16"	1500	47438-6 Gr. 4

REBASED MAJOR AND MINOR FILAMENTS—3 PIN

C	8	18+3.5	16.8	A-15	C-2V & Inv. C-2V	1/64"	2 3/16"	1500*	47438-22 Gr. 1
C1	10	18+3.5	16.5	A-15	C-2V & CC-6	1/64"	2 3/16"	1500*	47438-20 Gr. 1

REBASED SINGLE FILAMENT—2 PIN

D	12	9	7.5	G-16½	C-2R	1/64"	1.91" **	1500	47438-14 Gr. 1

*Rating of Major Filament only.

**From top of pins to top of filament.

PLATE H3911

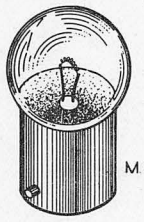

A

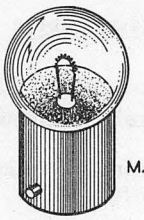

B

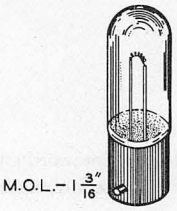

D

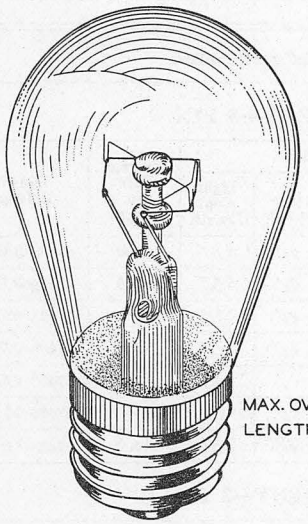

E

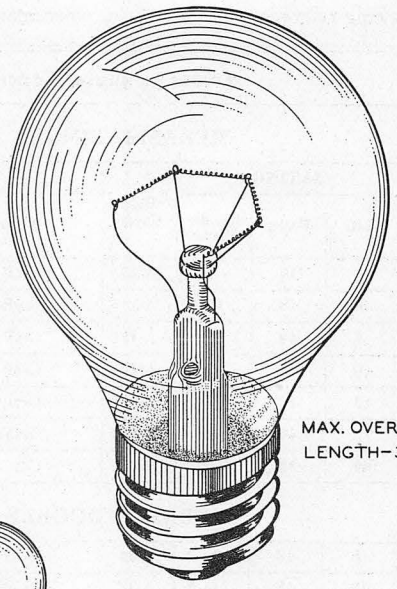

F

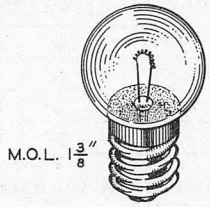

G

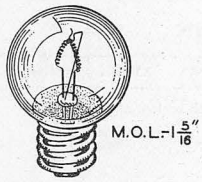

J

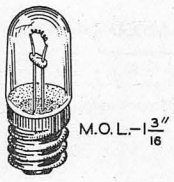

K

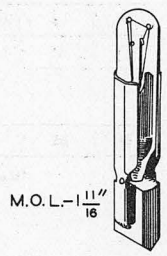

N

Incandescent Lamps

Incandescent Lamps

For Indicating Purposes and For Electric Semaphore Lamps

Note: See foreword and general ordering information at the beginning of this part.
The list shown below includes lamps for use with the following devices:

cTc Control Machines
NX Control Machines
Lever Lights in Interlocking Machines
Illuminated Track Indicators and Diagrams
Electric Semaphore Lamps, etc.

Drawing references are shown for convenience in checking shipping lists and invoices.

Order by plate, figure number and name

Fig. No.	RATING			Candle Power	Type of Base	Bulb Shape	FILAMENT		Average Life in Hours	Drawing Reference
	Volts	Amps.	Watts				Form	Light Cen. Length		
A	6-8	.55		3	S.C. Bay. Cand.	G-6	C-2R	¾"	500	48088-4
A1	12-16	.36		3	S.C. Bay. Cand.	G-6	C-2R	13/16"	1000	48088-5
A2	18-24	.17		3	S.C. Bay. Cand.	G-6	C-2V	¾"	200	48088-3
B	12-16	.36		3	D.C. Bay. Cand.	G-6	C-2R	13/16"	1000	48088-6
D	12.3	.14		1	Min. Bay.	T-3¼	C-2R	5/8"	1000	57026-2
D1	12.3	.14		Outside red	Min. Bay.	T-3¼	C-2R	5/8"	1000	57026-3
D2	6-8	.15			Min. Bay.	T-3¼	C-2R	¾"	3000	57026-4
E	12		2.5	1.3	Med. Screw	S-14	S-1	2½"	1500	50371-12
E1	12		5.	3.2	Med. Screw	S-14	S-1	2 9/32"	1500	50371
E2	14		2.5	1.3	Med. Screw	S-14	S-1	2 9/32"	1500	50371-11
E4	130		10.	6.4	Med. Screw	S-14	S-1	2½"	1000	50371-2
E5	120		10.	Inside red	Med. Screw	S-14	C-9	2½"	1500	44775-4
E6	125		10.	6.2	Med. Screw	S-14	C-9	2½"	1500	44775-6
F	120		25.	Inside Frosted	Med. Screw	A-19	C-9	2½"	1000	44775-10
F1	34		15.	Inside Frosted	Med. Screw	A-15	C-9	2½"	1000	50371-13
G	12-16	.57		6.	Cand. Screw	G-6	C-2R	13/16"	750	43198-15
J	14	.2		1.4	Min. Screw	G-6	C-2V	7/8"	1000	43198-7
K	6.3	.15		.5	Min. Screw	T-3¼	C-2R	15/16"	3000	43198-11
K1	6.3	.25		.8	Min. Screw	T-3¼	C-2R	15/16"	3000	43198-20
K2	6.3	.15		Outside green	Min. Screw	T-3¼	C-2R	15/16"	3000	43198-22
K3	6.3	.15		Outside yellow	Min. Screw	T-3¼	C-2R	15/16"	3000	43198-17
K4	6.3	.15		Outside red	Min. Screw	T-3¼	C-2R	15/16"	3000	43198-18
K5	6.3	.15		Frosted	Min. Screw	T-3¼	C-2R	15/16"	3000	43198-12
N	4	.17 to .21		.25	Slide	T-2	C-6		1500	52879
N1	8	.08 to .10		.20	Slide	T-2	C-21		1000	52879-12
N2	12	.09 to .11		.28	Slide	T-2	C-21		1000	52879-1
N3	12	.17		1.10	Slide	T-2	C-21		1000	52879-6
N4	12	.17		Red tip	Slide	T-2	C-21		1000	52879-7
N5	12	.17		Green tip	Slide	T-2	C-21		1000	52879-8
N6	16	.09 to .11		.37	Slide	T-2	C-21		1000	52879-3
N7	24	.032 to .038		.21	Slide	T-2	C-21		1000	52879-2
N8	24	.09 to .11		.60	Slide	T-2	C-21		1000	52879-5
N9	24	.09 to .11		Red Tip	Slide	T-2	C-21		1000	52879-9
N10	24	.09 to .11		Green tip	Slide	T-2	C-21		1000	52879-10
N11	24	.09 to .11		Amber tip	Slide	T-2	C-21		1000	52879-11

Memoranda

Section H, Part 40

Lenses, Roundels and Cover Glasses for G-R-S Signals

Lenses for G-R-S Signals

Drawing references are shown for convenience in checking shipping lists and invoices.

Order by plate, figure number and name

FIG. NO.	DIA. IN.	FOCUS	G-R-S NO. WITHOUT GASKET	G-R-S NO. WITH GASKET	DESCRIPTION	COLOR	MOULD MARKINGS	FOR G-R-S SIGNAL, TYPE:
1	10 1/2	6	53118		Optical H.T.	Clear	10 1/2 D. 6 F. H.T. Pat. 6-24-19	S-SA
2	10 1/2	6	53118-1		8° Spred. T.	Clear	10 1/2 D. 6 F. H.T. 8° Pat. 6-24-19	S-SA
3	8 3/8	5	43987-11	54193 Gr.7	30° Spredlite	Clear	8 3/8 D. x 5 F. S.O.	S-SA
4	8 3/8	5	43987-17	54193 Gr.9	8° Spred. T.	Clear	8 3/8 x 5 F. 20° H.T. Pat.6-24-19	S-SA
5	8 3/8	5	43987-22	54193 Gr.10	30° Spred. 40° fluted BE.	Clear	8 3/8 x 5 F. 30° Spr. 40° Defl. BE.	S-SA
6	8 3/8	5	36733-7	54193 Gr.4	Opt. 40° Deflecting	Clear	8 3/8 D. x 5 F. S.O. 40° Defl. BE.	S-SA
7	8 3/8	4	43987	54193 Gr.6	Outer Doublet	Clear	8 3/8 D. x 4 F. O.D. No. 54097	D-E-G-L-M-MA-U-W
8	8 3/8	4	43987-2		O.D. 8° Spred.	Clear	8 3/8 D. x 4 F. O.D.	D-E-G-L-M-MA-U-W
9	8 3/8	4	43987-12	54193 Gr.1	O.D. 40° Defl. Bullseye	Clear	8 3/8 D. x 4 F. O.D. 40° Def. BE. #54105	D-E-G-L-M-MA-U-W
10	8 3/8	4	43987-13	54193 Gr.2	O.D. 8° Spred. 20° Toric	Clear	8 3/8 D. x 4 F. O.D. 20° H.T. Pat.6-24-19	D-E-G-L-M-MA-U-W
11	8 3/8	4	43987-15	54193 Gr.3	O.D. 30° Spred.	Clear	8 3/8 D. x 4 F. O.D. No. 54097	D-E-G-L-M-MA-U-W

GENERAL RAILWAY SIGNAL COMPANY September 1945

12	8 3/8	4	43987-16	54193 Gr.8	O.D. 30° Spred. 20° Toric	Clear	8 3/8 D. x 4 F. O.D. 20° H.T. Pat.6-24-19	D-E-G-L-M-MA-U-W
13	8 3/8	4	47976	54193 Gr.5	O.D. 20° Toric	Clear	8 3/8 D. x 4 F. O.D. 20° H.T. Pat.6-24-19	D-E-G-L-M-MA-U-W
14	8 3/8	11 1/2	54249-2	54193-2 Gr.1	Plano Convex	Clear	None	SA-SC
15	6 3/8	3 3/4	53119	54193-1 Gr.1	Optical	Clear	6 3/8 D. x 3 3/4 F. S.O.	AW-FA-MD-ME With Phankill
16	6 3/8	3 3/4	53119-18	54193-1 Gr.2	Opt. 40° Deflect. BE.	Clear	6 3/8 D. x 3 3/4 F. S.O. 40° Defl. BE.	AW-FA-MD-ME
17	6 3/8	3 3/4	53119-19	54193-1 Gr.3	30° Spredlite 40° Defl. BE.	Clear	6 3/8 D. x 3 3/4 F. S.O. 40° Defl. BE.	AW-FA-MD-ME
18	5 3/8	3 1/2	31624-1		Optical	Clear	5 3/8 D. x 3 1/2 F. S.O.	Semaphore Lamp-Marker
19	5 3/8	3 1/2	31624-2		Optical	Red	5 3/8 D. x 3 1/2 F. S.O.	Semaphore Lamp-Marker
20	5 3/8	3 1/2	31624-3		Optical	Yellow	5 3/8 D. x 3 1/2 F. S.O.	Semaphore Lamp-Marker
21	5 3/8	3 1/2	31624-4		Optical	Green	5 3/8 D. x 3 1/2 F. S.O.	Semaphore Lamp-Marker
22	5 3/8	3 1/2	31624-5		Optical	Blue	5 3/8 D. x 3 1/2 F. S.O.	Semaphore Lamp-Marker
23	5 3/8	3 1/2	31624-10		Optical	K-Purple	5 3/8 D. x 3 1/2 F. S.O.	Semaphore Lamp-Marker
24	5 3/8	3 1/2	31624-11		Optical	E-Purple	5 3/8 D. x 3 1/2 F. S.O.	Semaphore Lamp-Marker
25	5 3/8	3 1/2	31624-14		Optical	K-Lun.Wh.	5 3/8 D. x 3 1/2 F. S.O.	Semaphore Lamp-Marker

(Continued on following page)

Lenses for G-R-S Signals

Drawing references are shown for convenience in checking shipping lists and invoices.

Order by plate, figure number and name

FIG. NO.	DIA. IN.	FOCUS	G-R-S NO. WITHOUT GASKET	G-R-S NO. WITH GASKET	DESCRIPTION	COLOR	MOULD MARKINGS	FOR G-R-S SIGNAL, TYPE:
26	5 3/8	3 1/2	31624-31		Optical	Traffic Red	5 3/8 D. x 3 1/2 F. S.O.	Semaphore Lamp-Marker
27	5 3/8	3 1/2	45699		Spredlite	Clear	5 3/8 D. x 3 1/2 F. S.O.	Semaphore Lamp-Marker
28	5 3/8	3 1/2	45699-1		30° Spredlite	Traffic Red	5 3/8 D. x 3 1/2 F. S.O.	XB Crossing
29	5 3/8	3 1/2	45699-2		45° Defl. Lens	Traffic Red	5 3/8 D. x 3 1/2 F. 45° Defl. No. 54186	XB Crossing
30	5 3/8	3 1/2	45699-3		30° Spredlite	Clear	5 3/8 D. x 3 1/2 F. S.O.	XB Crossing
31	5 3/8	3 1/2	45699-4		30° Spredlite	Yellow	5 3/8 D. x 3 1/2 F. S.O.	XB Crossing
32	5 3/8	3 1/2	45699-5		45° Defl. Lens	Yellow	5 3/8 D. x 3 1/2 F. 45° Defl. No. 54186	XB Crossing
33	5 3/8	3 1/2	47585-2		Inverted	Clear	5 3/8 D. x 3 1/2 F. I.L.	B-Position Light
34	5 3/8	2 1/4	47585		Invrtd. Toric	Clear	5 3/8 D. x 2 1/4 F. I.L. 10° H.T. Pat. 6-24-19	B-Position Light
35	5 3/8	2 1/4	47585-1		Invrtd. Risers Painted	Clear	5 3/8 D. x 2 1/4 F. I.L. 10° H.T. Pat. 6-24-19	B-Position Light

GENERAL RAILWAY SIGNAL COMPANY
September 1945

36	5 3/8	2 1/4	47585-3		Inverted	Clear	5 3/8 D. x 2 1/4 F.I.L. No. 54108	P-Switch
37	5 3/8	2 1/4	47585-4		Invrtd.Toric	E.Lun.Wh.	5 3/8 D. x 2 1/4 F.I.L. 10° H.T. Pat.6-24-19	B-Position Light
38	5 3/8	2 1/4	47585-5		Invrtd.Toric Risers Painted	E.Lun.Wh.	5 3/8 D. x 2 1/4 F.I.L. 10° H.T. Pat.6-24-19	B-Position Light
39	5 1/2	1/2	43988		Inner Doublet	Green	5 1/2 D. x 1/2 F. I.D.	AW-D-E-FA-G-L-M-MA-MD-ME-U-W
40	5 1/2	1/2	43988-1		Inner Doublet	Yellow	5 1/2 D. x 1/2 F. I.D.	AW-D-E-FA-G-L-M-MA-MD-ME-U-W
41	5 1/2	1/2	43988-2		Inner Doublet	Red	5 1/2 D. x 1/2 F. I.D.	AW-D-E-FA-G-L-M-MA-MD-ME-U-W
42	5 1/2	1/2	43988-3		Inner Doublet	Clear	5 1/2 D. x 1/2 F. I.D.	AW-D-E-FA-G-L-M-MA-MD-ME-U-W
43	5 1/2	1/2	43988-4		Inner Doublet	K.Purple	5 1/2 D. x 1/2 F. I.D.	AW-D-E-FA-G-L-M-MA-MD-ME-U-W
44	5 1/2	1/2	43988-5		Inner Doublet	E.Lun.Wh.	5 1/2 D. x 1/2 F. I.D.	AW-D-E-FA-G-L-M-MA-MD-ME-U-W
45	5 1/2	1/2	43988-7		Inner Doublet	Blue	5 1/2 D. x 1/2 F. I.D.	AW-D-E-FA-G-L-M-MA-MD-ME-U-W
46	5 1/2	1/2	43988-8		I.D. with "S"	Clear	5 1/2 D. x 1/2 F. I.D.	D-E-G-L-M-MA-U-W
47	5 1/2	1/2	43988-9		I.D.with "G"	Yellow	5 1/2 D. x 1/2 F. I.D.	D-E-G-L-M-MA-U-W
48	5 1/2	1/2	43988-13		Inner Doublet	Traffic Yel.	5 1/2 D. x 1/2 F. I.D.	W-(Crossing Unit)
49	5 1/2	1/2	43988-14		Inner Doublet	Traffic Red	5 1/2 D. x 1/2 F. I.D.	W-(Crossing Unit)

(Continued on following page)

Lenses for G-R-S Signals

Drawing references are shown for convenience in checking shipping lists and invoices.

Order by plate, figure number and name

FIG. NO.	DIA. IN.	FOCUS	G-R-S NO. WITHOUT GASKET	G-R-S NO. WITH GASKET	DESCRIPTION	COLOR	MOULD MARKINGS	FOR G-R-S SIGNAL, TYPE:
50	5 1/2	1/2	43988-15		I.D. with hole in center 2 1/4	K.Purple	5 1/2 D. x 1/2 F. I.D.	AW-D-E-FA-G-L-M-MA-MD-ME-U-W
51	5 1/2	1/2	43988-17		I.D. with hole in center 1 3/8	K.Purple	5 1/2 D. x 1/2 F. I.D.	AW-D-E-FA-G-L-M-MA-MD-ME-U-W
52	5 1/2	1/2	43988-18		I.D. with "S"	Red	5 1/2 D. x 1/2 F. I.D.	D-E-G-L-M-MA-U-W
53	5 1/2	1/2	43988-19		I.D. with "S"	Yellow	5 1/2 D. x 1/2 F. I.D.	D-E-G-L-M-MA-U-W
54	5 1/2	1/2	43988-20		I.D. with "T"	Yellow	5 1/2 D. x 1/2 F. I.D.	D-E-G-L-M-MA-U-W
55	5 1/2	1/2	43988-21		I.D. with "S"	E.Lun.Wh.	5 1/2 D. x 1/2 F. I.D.	D-E-G-L-M-MA-U-W
56	5	2 3/4	45930		Outer Doublet	Clear	5 D. x 2 3/4 F. O.D.	F-Semaphore-Markers
57	5	2 3/4	45930-1		O.D. Toric	Clear	5 D. x 2 3/4 F. O.D. 20° H.T. Pat. 6-24-19	F-Semaphore-Markers
58	5	2 3/4	45930-2		O.D. 15° Spred.	Clear	5 D. x 2 3/4 F. O.D. Top Spredlite 15°	F-Semaphore-Markers
59	5	3 1/2	31624		Optical	Clear	5 D. x 3 1/2 F. S.O.	A-AT-Semaphore
60	5	3 1/2	31624-6		Optical	Red	5 D. x 3 1/2 F. S.O.	A-AT-Semaphore
61	5	3 1/2	31624-7		Optical	Yellow	5 D. x 3 1/2 F. S.O.	A-AT-Semaphore

GENERAL RAILWAY SIGNAL COMPANY September 1945

62	5	3 1/2	31624-8		Optical	Green	5 D. x 3 1/2 F. S.O.	A-AT-Semaphore
63	5	3 1/2	31624-9		Optical	Blue	5 D. x 3 1/2 F. S.O.	A-AT-Semaphore
64	5	3 1/2	31624-12		Optical	K.Purple	5 D. x 3 1/2 F. S.O.	A-AT-Semaphore
65	5	3 1/2	31624-13		Optical	E.Purple	5 D. x 3 1/2 F. S.O.	A-AT-Semaphore
66	5	3 1/2	31624-15		Optical	K.Lun.Wh.	5 D. x 3 1/2 F. S.O.	A-AT-Semaphore
67	5	3 1/2	31624-21		Opt.Sandbld.	Clear	5 D. x 3 1/2 F. S.O.	A-AT-Semaphore
68	5	3 1/2	31624-22		Opt.Sandbld.	Red	5 D. x 3 1/2 F. S.O.	A-AT-Semaphore
69	5	3 1/2	31624-23		Opt.Sandbld.	Yellow	5 D. x 3 1/2 F. S.O.	A-AT-Semaphore
70	5	3 1/2	31624-24		Opt.Sandbld.	Green	5 D. x 3 1/2 F. S.O.	A-AT-Semaphore
71	5	3 1/2	31624-25		Opt.Sandbld.	Blue	5 D. x 3 1/2 F. S.O.	A-AT-Semaphore
72	5	3 1/2	31624-26		Opt.Sandbld.	K.Purple	5 D. x 3 1/2 F. S.O.	A-AT-Semaphore
73	5	3 1/2	31624-27		Opt.Sandbld.	E.Purple	5 D. x 3 1/2 F. S.O.	A-AT-Semaphore
74	5	3 1/2	31624-28		Opt.Sandbld.	E.Lun.Wh.	5 D. x 3 1/2 F. S.O.	A-AT-Semaphore
75	4	2 1/4	47586-1		Optical Sandblasted	Clear	4 D. x 2 1/4 F. S.O. No. 54007	C-(Position Light Dwarf)
76	4	2 1/4	56902		Optical	Clear	4 D. x 2 1/4 F. S.O. No. 54007	VA-(Color Pos.Light Dwarf)
77	3 5/8	5/8	45926		Inner Doublet	Clear	3 5/8 D. x 5/8 F. I.D.	AN-AV-F-Semaphore-Marker
78	3 5/8	5/8	45926-1		Inner Doublet	Green	3 5/8 D. x 5/8 F. I.D.	AN-AV-F-Semaphore-Marker
79	3 5/8	5/8	45926-2		Inner Doublet	Yellow	3 5/8 D. x 5/8 F. I.D.	AN-AV-F-Semaphore-Marker
80	3 5/8	5/8	45926-3		Inner Doublet	Red	3 5/8 D. x 5/8 F. I.D.	AN-AV-F-Semaphore-Marker

(Continued on following page)

Lenses for G-R-S Signals

Drawing references are shown for convenience in checking shipping lists and invoices.

Order by plate, figure number and name

FIG. NO.	DIA. IN.	FOCUS	G-R-S NO. WITHOUT GASKET	G-R-S NO. WITH GASKET	DESCRIPTION	COLOR	MOULD MARKINGS	FOR G-R-S SIGNAL, TYPE:
81	3 5/8	5/8	45926-4		Inner Doublet	K.Purple	3 5/8 D. x 5/8 F. I.D.	AN-AV-F-Semaphore-Marker
82	3 5/8	5/8	45926-5		Inner Doublet	E.Lun.Wh.	3 5/8 D. x 5/8 F. I.D.	AN-AV-F-Semaphore-Marker
83	3 5/8	5/8	45926-6		Inner Doublet	Blue	3 5/8 D. x 5/8 F. I.D.	AN-AV-F-Semaphore-Marker
84	3 5/8	5/8	45926-7		I.D.with hole in center	Purple	3 5/8 D. x 5/8 F. I.D.	AN-AV-F-Semaphore-Marker
85	3 1/2	2 1/4	46762		Optical	Green	3 1/2 D. x 2 1/4 F. S.O.	V-(Color Position Light)
86	3 1/2	2 1/4	46762-1		Optical	Clear	3 1/2 D. x 2 1/4 F. S.O.	V-(Color Position Light)
87	3 1/2	2 1/4	46762-2		Optical	Yellow	3 1/2 D. x 2 1/4 F. S.O.	V-(Color Position Light)
88	3 1/2	2 1/4	46762-3		Optical	Red	3 1/2 D. x 2 1/4 F. S.O.	V-(Color Position Light)
89	3 1/2	2 1/4	46762-4		Optical	K.Purple	3 1/2 D. x 2 1/4 F. S.O.	V-(Color Position Light)
90	3 1/2	2 1/4	46762-5		Optical	E.Purple	3 1/2 D. x 2 1/4 F. S.O.	V-(Color Position Light)
91	3 1/2	2 1/4	46762-6		Optical	E.Lun.Wh.	3 1/2 D. x 2 1/4 F. S.O.	V-(Color Position Light)

GENERAL RAILWAY SIGNAL COMPANY
September 1945

92	3 1/2	3/4	46762-7		Optical	Traffic Red	3 1/2 D. x 3/4 F. S.O.	Highway Crossing Gates
93	3 1/2	3/4	46762-8		30° Spredlite	Traffic Red	3 1/2 D. x 3/4 F. No. 54257	Highway Crossing Gates
94	2 3/4	3/8	56901		Inner Doublet	Green	2 3/4 D. x 3/8 F. I.D. No. 54259	VA-(Color Position Light)
95	2 3/4	3/8	56901-1		Inner Doublet	Yellow	2 3/4 D. x 3/8 F. I.D. No. 54259	VA-(Color Position Light)
96	2 3/4	3/8	56901-2		Inner Doublet	Red	2 3/4 D. x 3/8 F. I.D. No. 54259	VA-(Color Position Light)
97	2 3/4	3/8	56901-3		Inner Doublet	E.Lun.Wh.	2 3/4 D. x 3/8 F. I.D. No. 54259	VA-(Color Position Light)
98	2 3/4	3/8	56901-4		I.D.Sandblstd.	Clear	2 3/4 D. x 3/8 F. I.D. No. 54259	VA-(Color Position Light)
99	2 3/4	3/8	56901-5		Inner Doublet	Clear	2 3/4 D. x 3/8 F. I.D. No. 54259	VA-(Color Position Light)

Roundels and Cover Glasses for G-R-S Signals

Drawing references are shown for convenience in checking shipping lists and invoices.

Order by plate, figure number and name

FIG. NO.	DIA. IN.	G-R-S NO. WITHOUT GASKET	G-R-S NO. WITH GASKET	DESCRIPTION	COLOR	MOULD MARKINGS	FOR G-R-S SIGNAL, TYPE:
1	8 3/8	4679		Flat Roundel	Clear	8 3/8 Dia. F.R.	Semaphore
2	8 3/8	4679-1		Flat Roundel	Red	8 3/8 Dia. F.R.	Semaphore
3	8 3/8	4679-2		Flat Roundel	Yellow	8 3/8 Dia. F.R.	Semaphore
4	8 3/8	4679-3		Flat Roundel	Green	8 3/8 Dia. F.R.	Semaphore
5	8 3/8	4679-4		Flat Roundel	K.Purple	8 3/8 Dia. F.R.	Semaphore
6	8 3/8	4679-5		Flat Roundel	K.Lun.Wh.	8 3/8 Dia. F.R.	Semaphore
7	8 3/8	4679-6		Flat Roundel	Blue	8 3/8 Dia. F.R.	Semaphore
8	8 3/8	9238-38	54194 Gr. 1	Cvx. Cover Glass 20° Deflecting	Clear	8 3/8 D. 20° Deflecting Cover No. 2	D-E-G-L-M-MA-S-SA-SC
9	8 3/8	9238-40		Cvx. Cover Glass 20° Deflecting Plain Center	Clear	8 3/8 D. 20° Defl. Cover	D-E-G-L-M-MA-S-SA-SC
10	8 3/8	9238-53	54194 Gr. 2	Cvx. Cover Glass 40° Deflecting Plain Center	Clear	8 3/8 D. 40° Defl. Cover	D-E-G-L-M-MA-S-SA-SC
11	8 3/8	9238-75	54194 Gr. 9	Cvx. 15° Spred. Plain Spot Below Center	Clear	8 3/8 D. H.F. Cvx. Rdl. 15° Spread	S-SA-SC (With Compound Lens)
12	8 3/8	9238-76		Cvx. Cover Glass 20° Deflecting	E.Lun.Wh.	8 3/8 D. 20° Cvx. Defl. Rdl.	XA (Track Pan Lights)

General Railway Signal Company
September 1945

13	8 3/8	9238-77		Cvx. Cover Glass 20° Deflecting	Blue	8 3/8 D. 20° Cvx. Defl. Rdl.	XA (Track Pan Lights)
14	8 3/8	46723-1	54194-2 Gr. 1	Convex	Red	8 3/8 D. Cvx. Rdl.	Semaphore - W (With Reflector)
15	8 3/8	46723-2	54194-2 Gr. 2	Convex	Green	8 3/8 D. Cvx. Rdl.	Semaphore - W (With Reflector)
16	8 3/8	46723-3		Convex	Yellow	8 3/8 D. Cvx. Rdl.	Semaphore - W (With Reflector)
17	8 3/8	46723-4		Convex	Clear	8 3/8 D. Cvx. Rdl.	Semaphore - W (With Reflector)
18	8 3/8	46723-5		Convex	K.Lun.Wh.	8 3/8 D. Cvx. Rdl.	Semaphore - W (With Reflector)
19	8 3/8	46723-6		Convex	Blue	8 3/8 D. Cvx. Rdl.	Semaphore - W (With Reflector)
20	8 3/8	46723-7		Convex	K.Purple	8 3/8 D. Cvx. Rdl.	Semaphore - W (With Reflector)
21	8 3/8	46723-8		Convex	E.Purple	8 3/8 D. Cvx. Rdl.	Semaphore - W (With Reflector)
22	8 3/8	46723-9		Convex	E.Lun.Wh.	8 3/8 D. Cvx. Rdl.	Semaphore - W (With Reflector)
23	8 3/8	53142		Cvx. 30° Spred.	Red	8 3/8 D. 30° Spread N.F. 55336	W (With Reflector)
24	8 3/8	53142-1	54194 Gr. 3	Cvx. 30° Spred.	Clear	8 3/8 D. 30° Spread N.F. 55336	D-E-G-L-M-MA-S-SA-SC
25	8 3/8	53142-2		Cvx. 30° Spred. Plain Center	Clear	8 3/8 D. N.F. Cover 30° Spread	D-E-G-L-M-MA
26	8 3/8	53142-3		Conical 160° Spread 12° Deflecting	Traffic Red	8 3/8 D. 160° Spread Traffic 12 ° Conical	XA - XB
27	8 3/8	53142-6	54194 Gr. 6	Cvx. 30° Spred.	Traffic Red	8 3/8 D. N.F. Cover 30° Spread	W (With Reflector) XA - XB
28	8 3/8	53142-7		Conical 45° Defl. Left Hand	Traffic Red	8 3/8 D. 45° Deflecting Hy. Crossing Signal Code 55160 Plan 2182F	XA - XB

(Continued on following page)

September 1945 GENERAL RAILWAY SIGNAL COMPANY

Roundels and Cover Glasses for G-R-S Signals

Drawing references are shown for convenience in checking shipping lists and invoices.

Order by plate, figure number and name

FIG. NO.	DIA. IN.	G-R-S NO. WITHOUT GASKET	G-R-S NO. WITH GASKET	DESCRIPTION	COLOR	MOULD MARKINGS	FOR G-R-S SIGNAL, TYPE:
29	8 3/8	53142-8		Conical 45° Defl. Right Hand	Traffic Red	8 3/8 D. 45° Deflecting Hy. Crossing Signal Code 55160 Plan 2182F	XA - XB
30	8 3/8	53142-9	54194 Gr. 7	Cvx. 70° Spred.	Traffic Red	8 3/8 D. 70° Sp'dg Rdl.	XA - XB
31	8 3/8	53142-10	54194 Gr. 10	Cvx. 30° Spred. 15° Deflecting	Clear	8 3/8 D. No. 55304	D-E-G-L-M-MA-S-SA-SC
32	8 3/8	53142-11		Cvx. 30° Spred. 15° Deflecting	Traffic Red	8 3/8 D. No. 55304	XA - XB
33	8 3/8	53142-12	54194 Gr. 8	Cvx. 70° Spred.	Clear	8 3/8 D. 70° Spreading Roundel	D-E-G-L-M-MA-S-SA-SC
34	8 3/8	53142-13		Cvx. 20° Spred. 32° Deflecting	Traffic Red	8 3/8 D. Cvx. 20° Spread 32° Defl. No. 55472	XA - XB
35	8 3/8	53142-14		Cvx. 30° Spred.	Traffic Yel.	8 3/8 Cvx. Rdl. 30° Spread	XA
36	8 3/8	53142-15		Conical 45° Defl. Left Hand	Clear	8 3/8 D. 45° Deflecting Hy. Crossing Signal Code 55160 Plan 2182F	XA
37	8 3/8	53142-16		Conical 45° Defl. Right Hand	Clear	8 3/8 D. 45° Deflecting Hy. Crossing Signal Code 55160 Plan 2182F	XA
38	8 3/8	53142-17		Conical 45° Defl. Left Hand	Yellow	8 3/8 D. 45° Deflecting Hy. Crossing Signal Code 55160 Plan 2182 F	XA

GENERAL RAILWAY SIGNAL COMPANY

September 1945

39	8 3/8	53142-18		Conical 45° Defl. Right Hand	Yellow	8 3/8 D. 45° Deflecting Hy. Crossing Signal Code 55160 Plan 2182F	XA
40	8 3/8	53142-19		Cvx. 30° Spred.	Green	8 3/8 Cvx. Rdl. 30° Spread	XA
41	8 3/8	54264-1	54194-3 Gr. 1	Flat 8° Spred.	Clear	8 3/8 D. Fluted Rdl. 8° Spread	SA
42	8 3/8	54264-3		Flat 10° Spred.	Clear	8 3/8 D. Flat Rdl. 10° Spread No. 55143	SA
43	8 3/8	54264-4		Flat 20° Defl. with plain center	Clear	8 3/8 D. x 20° Defl. Flat C.G.	SA
44	8 3/8	54264-5		Flat 10° Defl. with plain center	Clear	8 3/8 D. 10° Defl. Flat C.G.	SA
45	8 3/8	54264-6		Flat 30° Spred. 2 3/4 Dia. plain center	Clear	8 3/8 D. Flat C.G. 30° Spread	SA
46	6 1/2	9245-1		Convex Roundel	Clear	6 1/2 Cvx. Rdl.	Semaphore
47	6 1/2	9245-2		Convex Roundel	Red	6 1/2 Cvx. Rdl.	Semaphore
48	6 1/2	9245-3		Convex Roundel	Yellow	6 1/2 Cvx. Rdl.	Semaphore
49	6 1/2	9245-4		Convex Roundel	Green	6 1/2 Cvx. Rdl.	Semaphore
50	6 1/2	9245-5		Convex Roundel	K. Purple	6 1/2 Cvx. Rdl.	Semaphore
51	6 1/2	9245-6		Convex Roundel	K. Lun. Wh.	6 1/2 Cvx. Rdl.	Semaphore
52	6 1/2	9245-7		Convex Roundel	Blue	6 1/2 Cvx. Rdl.	Semaphore
53	6 3/8	9238-2		Cvx. Cover Glass Plain	Clear	6 3/8 Cover	DM

(Continued on following page)

Roundels and Cover Glasses for G-R-S Signals

Drawing references are shown for convenience in checking shipping lists and invoices.

Order by plate, figure number and name

FIG. NO.	DIA. IN.	G-R-S NO. WITHOUT GASKET	G-R-S NO. WITH GASKET	DESCRIPTION	COLOR	MOULD MARKINGS	FOR G-R-S SIGNAL, TYPE:
54	6 3/8	9238-3		Cvx. Cover Glass Plain	Red	6 3/8 Cover	DM
55	6 3/8	9238-4		Cvx. Cover Glass Plain	Yellow	6 3/8 Cover	DM
56	6 3/8	9238-5		Cvx. Cover Glass Plain	Green	6 3/8 Cover	DM
57	6 3/8	9238-6		Cvx. Cover Glass Plain	K. Purple	6 3/8 Cover	DM
58	6 3/8	9238-7		Cvx. Cover Glass Plain	K. Lun. Wh.	6 3/8 Cover	DM
59	6 3/8	9238-8		Cvx. Cover Glass 10° Deflecting	Clear	6 3/8 D. x 10° Deflecting Cover	DM-MD-ME-FA-S-SA
60	6 3/8	9238-9		Cvx. Cover Glass 10° Deflecting	Red	6 3/8 D. x 10° Deflecting Cover	DM
61	6 3/8	9238-10		Cvx. Cover Glass 10° Deflecting	Yellow	6 3/8 D. x 10° Deflecting Cover	DM
62	6 3/8	9238-11		Cvx. Cover Glass 10° Deflecting	Green	6 3/8 D. x 10° Deflecting Cover	DM
63	6 3/8	9238-12		Cvx. Cover Glass 10° Deflecting	K. Purple	6 3/8 D. x 10° Deflecting Cover	DM
64	6 3/8	9238-13		Cvx. Cover Glass 10° Deflecting	K. Lun. Wh.	6 3/8 D. x 10° Deflecting Cover	DM

GENERAL RAILWAY SIGNAL COMPANY

September 1945

65	6 3/8	9238-14	54194-1 Gr.1	Cvx. Cover Glass 20° Deflecting	Clear	6 3/8 D. 20° Curve Deflector C. G.	DM-MD-ME-FA-S-SA
66	6 3/8	9238-15		Cvx. Cover Glass 20° Deflecting	Red	6 3/8 D. 20° Curve Deflector C. G.	DM
67	6 3/8	9238-16		Cvx. Cover Glass 20° Deflecting	Yellow	6 3/8 D. 20° Curve Deflector C. G.	DM
68	6 3/8	9238-17		Cvx. Cover Glass 20° Deflecting	Green	6 3/8 D. 20° Curve Deflector C. G.	DM
69	6 3/8	9238-18		Cvx. Cover Glass 20° Deflecting	K. Purple	6 3/8 D. 20° Curve Deflector C. G.	DM
70	6 3/8	9238-19		Cvx. Cover Glass 20° Deflecting	K. Lun. Wh.	6 3/8 D. 20° Curve Deflector C. G.	DM
71	6 3/8	9238-60		Cvx. Cover Glass 25° Deflecting	Clear	6 3/8 D. 25° Defl. Cover Code 55221	DM-MD-ME-FA-S-SA
72	6 3/8	9238-61		Cvx. Cover Glass 25° Deflecting	Green	6 3/8 D. 25° Defl. Cover Code 55221	DM
73	6 3/8	9238-62		Cvx. Cover Glass 25° Deflecting	Yellow	6 3/8 D. 25° Defl. Cover Code 55221	DM
74	6 3/8	9238-63		Cvx. Cover Glass 25° Deflecting	Red	6 3/8 D. 25° Defl. Cover Code 55221	DM
75	6 3/8	9238-64		Cvx. Cover Glass 25° Deflecting	K. Purple	6 3/8 D. 25° Defl. Cover Code 55221	DM
76	6 3/8	9238-65		Cvx. Cover Glass 25° Spredlite Defl.	Clear	6 3/8 D. 25° Spred. Defl. Code 55222	DM-MD-ME-FA-S-SA
77	6 3/8	9238-66		Cvx. Cover Glass 25° Spredlite Defl.	Green	6 3/8 D. 25° Spred. Defl. Code 55222	DM
78	6 3/8	9238-67		Cvx. Cover Glass 25° Spredlite Defl.	Yellow	6 3/8 D. 25° Spred. Defl. Code 55222	DM

(Continued on following page)

Roundels and Cover Glasses for G-R-S Signals

Drawing references are shown for convenience in checking shipping lists and invoices.

Order by plate, figure number and name

FIG. NO.	DIA. IN.	G-R-S NO. WITHOUT GASKET	G-R-S NO. WITH GASKET	DESCRIPTION	COLOR	MOULD MARKINGS	FOR G-R-S SIGNAL, TYPE:
79	6 3/8	9238-68		Cvx. Cover Glass 25° Spredlite Defl.	Red	6 3/8 D. 25° Spred. Defl. Code 55222	DM
80	6 3/8	9238-69		Cvx. Cover Glass 25° Spredlite Defl.	K. Purple	6 3/8 D. 25° Spred. Defl. Code 55222	DM
81	5 3/4	9238-59		Flat	Yellow	None	Switch Indicator
82	5 3/8	9238-32		Cvx. 20° Deflecting	Clear	5 3/8 D. x 20° Defl. C. G. Code 55111	Semaphore
83	5 3/8	9238-33		Cvx. 20° Deflecting	Red	5 3/8 D. x 20° Defl. C. G. Code 55111	Semaphore
84	5 3/8	9238-34		Cvx. 20° Deflecting	Yellow	5 3/8 D. x 20° Defl. C. G. Code 55111	Semaphore
85	5 3/8	9238-35		Cvx. 20° Deflecting	Green	5 3/8 D. x 20° Defl. C. G. Code 55111	Semaphore
86	5 3/8	9238-36		Cvx. 20° Deflecting	K. Purple	5 3/8 D. x 20° Defl. C. G. Code 55111	Semaphore
87	5 3/8	9238-37		Cvx. 20° Deflecting	K. Lun. Wh.	5 3/8 D. x 20° Defl. C. G. Code 55111	Semaphore
88	5 3/8	9238-79		Cvx. 20° Spred. Rdl.	Clear	5 3/8 D. 20° Cvx. Rdl.	Semaphore
89	5 3/8	9244		Flat Roundel	Clear	5 3/8 Dia. F. R.	Semaphore
90	5 3/8	9244-8		Flat Roundel	Red	5 3/8 Dia. F. R.	Semaphore

GENERAL RAILWAY SIGNAL COMPANY
September 1945

91	5 3/8	9244-9		Flat Roundel	Yellow	5 3/8 Dia. F. R.	Semaphore
92	5 3/8	9244-10		Flat Roundel	Green	5 3/8 Dia. F. R.	Semaphore
93	5 3/8	9244-11		Flat Roundel	K. Purple	5 3/8 Dia. F. R.	Semaphore
94	5 3/8	9244-12		Flat Roundel	K. Lun. Wh.	5 3/8 Dia. F. R.	Semaphore
95	5 3/8	9244-13		Flat Roundel	Blue	5 3/8 Dia. F. R.	Semaphore
96	5 3/8	9244-1		Convex Roundel	Clear	5 3/8 Cvx. Rdl.	Semaphore
97	5 3/8	9244-2		Convex Roundel	Red	5 3/8 Cvx. Rdl.	Semaphore
98	5 3/8	9244-3		Convex Roundel	Yellow	5 3/8 Cvx. Rdl.	Semaphore
99	5 3/8	9244-4		Convex Roundel	Green	5 3/8 Cvx. Rdl.	Semaphore
100	5 3/8	9244-5		Convex Roundel	K. Purple	5 3/8 Cvx. Rdl.	Semaphore
101	5 3/8	9244-6		Convex Roundel	K. Lun. Wh.	5 3/8 Cvx. Rdl.	Semaphore
102	5 3/8	9244-7		Convex Roundel	Blue	5 3/8 Cvx. Rdl.	Semaphore
103	5 3/8	9244-14		Convex Roundel	E. Purple	5 3/8 Cvx. Rdl.	Semaphore
104	5 3/8	47587		Conical Cover Glass 5 3/8 Dia. Sandblast Tip	Noviol	None	B-(Position Light)
105	5 3/8	47587-5		Conical Cover Glass	Clear	None	B-(Position Light)
106	5	9238-39		Cvx. 40° Deflecting	Clear	5 D. 40° Defl. Cover	F
107	4	9238-78		Cvx. 20° Deflecting	Clear	4 D. 20° Defl. & 55476	VA-(Color Position Light)
108	4	9240		Flat Roundel	Clear	4 D. F. R.	Semaphore
109	4	9240-1		Flat Roundel	Red	4 D. F. R.	Semaphore
110	4	9240-2		Flat Roundel	Yellow	4 D. F. R.	Semaphore
111	4	9240-3		Flat Roundel	Green	4 D. F. R.	Semaphore

(Continued on following page)

Roundels and Cover Glasses for G-R-S Signals

Drawing references are shown for convenience in checking shipping lists and invoices.

Order by plate, figure number and name

FIG. NO.	DIA. IN.	G-R-S NO. WITHOUT GASKET	G-R-S NO. WITH GASKET	DESCRIPTION	COLOR	MOULD MARKINGS	FOR G-R-S SIGNAL, TYPE:
112	4	9240-4		Flat Roundel	K. Purple	4 D. F. R.	Semaphore
113	4	9240-5		Flat Roundel	K. Lun. Wh.	4 D. F. R.	Semaphore
114	4	9240-6		Flat Roundel	Blue	4 D. F. R.	Semaphore
115	3 1/2	9238-1		Convex Roundel	Clear	3 1/2 Cvx. Rdl.	Semaphore
116	3 1/2	9238-47		Convex Roundel	Red	3 1/2 Cvx. Rdl.	Semaphore
117	3 1/2	9238-48		Convex Roundel	Yellow	3 1/2 Cvx. Rdl.	Semaphore
118	3 1/2	9238-49		Convex Roundel	Green	3 1/2 Cvx. Rdl.	Semaphore
119	3 1/2	9238-50		Convex Roundel	K. Purple	3 1/2 Cvx. Rdl.	Semaphore
120	3 1/2	9238-51		Convex Roundel	K. Lun. Wh.	3 1/2 Cvx. Rdl.	Semaphore
121	3 1/2	9238-52		Convex Roundel	Blue	3 1/2 Cvx. Rdl.	Semaphore
122	3 1/2	9238-54		Flat 20° Spredlite Sandblasted	Clear	3 1/2 D. F. Rdl. 20° Spread	V-Color Position Light Dwarf
123	3 1/2	9238-55		Flat 20° Spredlite	Green	3 1/2 D. F. Rdl. 20° Spread	V-Color Position Light Dwarf
124	3 1/2	9238-57		Flat 20° Spredlite	Red	3 1/2 D. F. Rdl. 20° Spread	V-Color Position Light Dwarf
125	3 1/2	9238-58		Flat 20° Spredlite	E. Lun. Wh.	3 1/2 D. F. Rdl. 20° Spread	V-Color Position Light Dwarf

GENERAL RAILWAY SIGNAL COMPANY
September 1945

126	2 1/4	54264		Flat 40° Deflecting	Clear	2 1/4 D. 40° Deflecting Flat Rdl.	S-SA-SC
127	2 1/4	54264	55031 Gr. 1	Flat 40° Deflecting	Clear	2 1/4 D. 40° Deflecting Flat Rdl.	U-Color Position Light High

September 1945
GENERAL RAILWAY SIGNAL COMPANY

PLATE H4003

Memoranda